BLAUBERG Ventilatoren

AIR HANDLING UNITS 2017

BLAUBERG Ventilatoren GmbH
Aidenbachstr. 52a
D-81379 München
Tel.: +49 89 78508088

info@blaubergventilatoren.de
www.blaubergventilatoren.de

Technical changes reserved.
Illustrations and texts are non-binding.

01/2017

BLAUBERG Ventilatoren

ABOUT BLAUBERG

Blauberg Ventilatoren is a future- and client-orientated company, which stands for innovative technology and timeless design for the ventilation industry. With a great range of the fans and ventilation accessories Blauberg is represented in more than 20 countries.

We are ready to offer you the most complete product range at the ventilation market, starting with domestic fans, including accessories for single-room ventilation with heat recovery and industrial fans and finishing with individually designed ventilation units and systems.

Due to our product diversity, we do our best to meet the individual needs of our clients in various countries with the best combination of price and quality.

Our philosophy is to cultivate long-term client relations and partnerships by high quality and reliability.
Blauberg Ventilatoren is always open to clients.

You are welcome to visit our attractive show room in the distribution center in Munich to evaluate the Blauberg program and to review the operating units. Registration at info@blaubergventilatoren.de

BLAUBERG Ventilatoren

Content

COMPACT HEAT RECOVERY AIR HANDLING UNITS

KOMFORT Ultra S250
Air capacity – up to 250 m³/h

6

COMPACT HEAT RECOVERY AIR HANDLING UNITS

KOMFORT Ultra L250
Air capacity – up to 250 m³/h

8

COMPACT HEAT RECOVERY AIR HANDLING UNITS

KOMFORT Ultra EC S300
Air capacity – up to 300 m³/h

10

COMPACT HEAT RECOVERY AIR HANDLING UNITS

KOMFORT Ultra EC L300
Air capacity – up to 300 m³/h

12

HEAT RECOVERY AIR HANDLING UNITS

KOMFORT L
Air capacity – up to 2200 m³/h

14

HEAT RECOVERY AIR HANDLING UNITS

KOMFORT LE
Air capacity – up to 2200 m³/h

18

HEAT RECOVERY AIR HANDLING UNITS

KOMFORT EC L
Air capacity – up to 810 m³/h

24

HEAT RECOVERY AIR HANDLING UNITS

KOMFORT EC LB
KOMFORT EC LBE
Air capacity – up to 940 m³/h

28

HEAT RECOVERY AIR HANDLING UNITS

KOMFORT EC LW
Air capacity – up to 550 m³/h

32

HEAT RECOVERY AIR HANDLING UNITS

KOMFORT Roto EC LE
Air capacity – up to 1500 m³/h

36

HEAT RECOVERY AIR HANDLING UNITS

KOMFORT Roto EC LW
Air capacity – up to 1500 m³/h

40

SINGLE ROOM HEAT RECOVERY AIR HANDLING UNITS

KOMFORT Ultra D105
KOMFORT Ultra D105-A
Air capacity – up to 106 m³/h

46

SUSPENDED HEAT RECOVERY AIR HANDLING UNIT

KOMFORT EC DB
Air capacity – up to 410 m³/h

48

SUSPENDED HEAT RECOVERY AIR HANDLING UNITS

KOMFORT EC DE
Air capacity – up to 4000 m³/h

52

SUSPENDED HEAT RECOVERY AIR HANDLING UNITS

KOMFORT EC DW

Air capacity – up to 3800 m³/h

56

WALL-MOUNTED HEAT RECOVERY AIR HANDLING UNITS

KOMFORT EC U330

KOMFORT EC UE330-2

Air capacity – up to 331 m³/h

64

WALL-MOUNTED HEAT RECOVERY AIR HANDLING UNITS

KOMFORT EC S(B)200(-E)

KOMFORT EC S(B)250(-E)

Air capacity – up to 290 m³/h

70

SUPPLY VENTILATION UNITS

BLAUBOX ME

Air capacity – up to 3500 m³/h

80

DUCT ELECTRICAL HEATERS

EKH

86

DUCT ELECTRICAL HEATERS

EKH

96

DUCT WATER COOLING UNITS

KWK

112

WATER MIXING UNITS

WMG

124

KITCHEN HEAT RECOVERY AIR HANDLING UNIT

KOMFORT EC SKE270-1.5

Air capacity – up to 270 m³/h

62

WALL-MOUNTED HEAT RECOVERY AIR HANDLING UNITS

KOMFORT EC S

KOMFORT EC SB

Air capacity – up to 700 m³/h

66

SUPPLY VENTILATION UNITS

BLAUBOX E

Air capacity – up to 1520 m³/h

76

DUCT ELECTRICAL HEATERS

EVH

84

DUCT WATER HEATERS

WKH

90

DUCT WATER HEATERS

WKH

100

DUCT DX COOLING UNITS

KFK

118

SILENCERS

SD

126

FLEXIBLE SILENCERS

SDF

128

SILENCERS

SD

130

SHUTTERS

VK

132

SHUTTERS

VKA

133

SHUTTERS

VK

134

SHUTTERS

AVK

135

GRAVITY DAMPERS

VG

136

GRAVITY DAMPERS

VG

137

AIR FLOW DAMPERS

SL

138

FLEXIBLE ANTI-VIBRATION CONNECTORS

EVA

140

FLEXIBLE ANTI-VIBRATION CONNECTORS

EVAF

141

FLEXIBLE ANTI-VIBRATION CONNECTORS

EVA

142

BACKDRAFT DAMPER WITH SPRINGS

VRV

143

BACKDRAFT DAMPERS

VRVS

144

BACKDRAFT DAMPERS

VRVS

145

FILTER BOXES

KFBK

146

FILTER BOXES WITH V-FILTERS

KFBV

147

FILTER BOXES WITH BAG FILTERS

KFBT

148

FILTER BOXES WITH BAG FILTERS

KFBT

150

FILTER BOXES

KFBK

152

CLAMPS

KZ

153

CLAMPS

KZH

154

Compact heat recovery air handling units

KOMFORT Ultra S250

Air capacity – up to 250 m³/h

Heat recovery efficiency – up to 78 %

Application

- Air handling units for efficient supply and exhaust ventilation in flats, houses, cottages and other buildings.
- Heat recovery minimises ventilation heat losses.
- Control of air exchange for creating comfortable indoor microclimate.
- Compatible with round Ø125 mm air ducts.

Design

- **The casing of KOMFORT Ultra S250 S12** is made of double-skinned aluzinc panels, internally filled with 20 mm mineral wool layer for heat- and sound-insulation.
- **The casing of KOMFORT Ultra S250 S12 white** is made of double-skinned white painted metal panels, internally filled with 20 mm mineral wool layer for heat and sound insulation.
- The spigots are located at the top of the unit and are rubber sealed for airtight connection to the air ducts.
- The hinged panel of the casing ensures easy access to the unit internals for service works including cleaning, filter replacement, etc.

Fans

- Asynchronous external rotor motors and centrifugal impellers with backward curved blades are used for air supply and exhaust.
- Integrated motor overheating protection with automatic restart.
- Dynamically balanced impellers.
- Equipped with ball bearings for longer service life.
- Reliable and quiet operation.

Heat recovery

- **The KOMFORT Ultra S250-H S12** unit is equipped with a plate cross-flow aluminium heat exchanger that recovers heat.
- The drain pan under the heat exchanger block of the **KOMFORT Ultra S250-H S12** is used for condensate collection and drainage.
- **The KOMFORT Ultra S250-E S12** unit is equipped with a plate enthalpy cross-flow heat exchanger made of polymerized cellulose that recovers heat and humidity.
- Due to humidity recovery the enthalpy heat exchanger produces no condensate.
- The air flows are fully separated within the heat exchangers. Odours and contaminants contained in the extract air are not transferred to the supply air flow.
- Heat recovery is based on heat and/or humidity transfer through the plates of the heat exchanger. In the cold season supply air is heated in the heat exchanger by transferring the heat energy of warm and humid extract air to the cold fresh air. Heat recovery minimizes heat losses, which reduces the cost of space heating.
- In summer the heat exchanger performs reverse and intake air is cooled in the heat exchanger by the cool extract air. This reduces load on air conditioners and saves electricity.
- The electronic frost protection system is used to prevent the heat exchanger freezing in cold seasons. In case of freezing danger communicated by the temperature sensor the supply fan is stopped to let warm extract air warm up the heat exchanger. After that the supply fan is turned on and the unit reverts to the normal operation mode.
- In summer, when the indoor and outdoor temperature difference is small heat recovery is not reasonable. In this case the heat exchanger can be temporary replaced with a summer block for warm seasons (available separately).

Air filtration

- Two built-in cassette filters with filtration class G4 provide efficient supply and extract air filtration.
- Optionally, a cassette F8 filter can be installed to provide efficient supply air filtration.

Control and automation

- Smooth motor speed control from 0 up to 100 % by means of the thyristor speed controller SGS E1 (included in the delivery).

Mounting

- Mounting to floor, ceiling or wall with fixing brackets.
- While mounting provide free access to the service panel for filter replacement and servicing.
- **The KOMFORT Ultra S250-H S12** unit mounting position must provide condensate collection and drainage.

Technical data

Parameters	KOMFORT Ultra S250-H	KOMFORT Ultra S250-E
Unit voltage [V / 50-60 Hz]	1 ~ 230	
Power [W]	148	
Current [A]	0.78	
Maximum air capacity [m³/h]	250	
RPM	2700	
Sound pressure level at 3 m [dBA]	28-47	
Transported air temperature [°C]	from -25 up to +40	
Insulation	20 mm mineral wool	
Extract / supply filter	G4	
Replaceable filter*	G4 (F8 PM2.5 81 %)*	
Connected air duct diameter [mm]	125	
Heat recovery efficiency [%]	from 55 up to 78	from 52 up to 73
Humidity recovery efficiency [%]	-	from 27 up to 45
Heat exchanger type	cross-flow	
SEC class	A	
Heat exchanger material	aluminium	polymerized cellulose

*Replaceable filter kits are ordered separately.

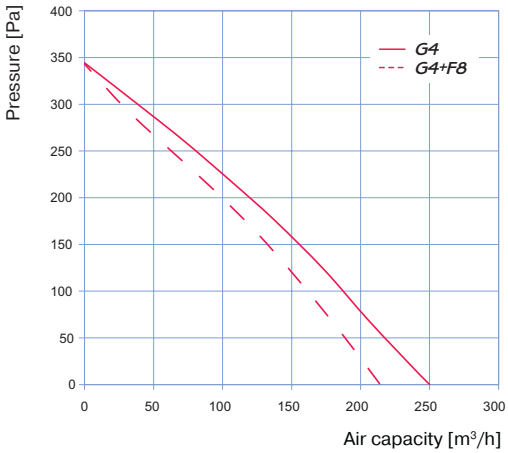

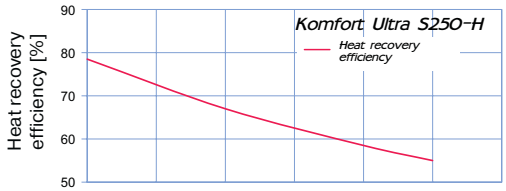

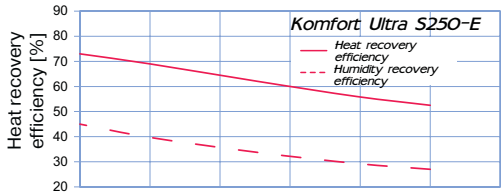

Overall dimensions, mm

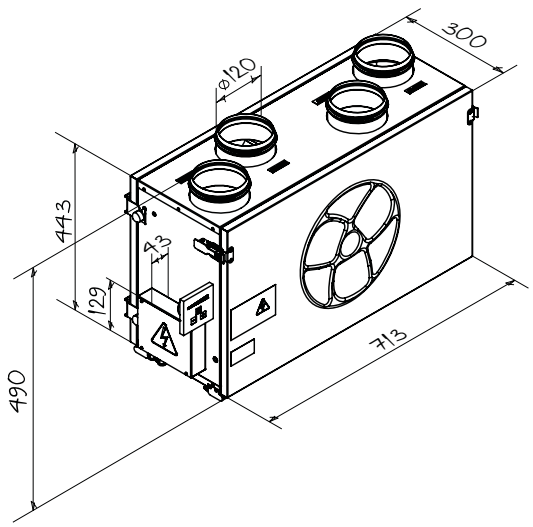

Compact heat recovery air handling units

KOMFORT Ultra L250

Air capacity – up to 250 m³/h

Heat recovery efficiency – up to 78 %

Application

- Air handling units for efficient supply and exhaust ventilation in flats, houses, cottages and other buildings.
- Heat recovery minimises ventilation heat losses.
- Control of air exchange for creating comfortable indoor microclimate.
- Compatible with round Ø125 mm air ducts.

Design

- **The casing of KOMFORT Ultra L250 S12** is made of double-skinned aluzinc panels, internally filled with 20 mm mineral wool layer for heat and sound insulation.
- **The casing of KOMFORT Ultra L250 S12 white** is made of double-skinned white painted metal panels, internally filled with 20 mm mineral wool layer for heat and sound insulation.
- The spigots for connection to the air ducts are located at the side of the unit.
- The hinged panel of the casing ensures easy access to the unit internals for service works including cleaning, filter replacement, etc.

Fans

- Asynchronous external rotor motors and centrifugal impellers with backward curved blades are used for air supply and exhaust.
- Integrated motor overheating protection with automatic restart.
- Dynamically balanced impellers.
- Equipped with ball bearings for longer service life.
- Reliable and quiet operation.

Heat recovery

- **The KOMFORT Ultra L250-H S12** unit is equipped with a plate cross-flow aluminium heat exchanger that recovers heat.
- The drain pan under the heat exchanger block of the **KOMFORT Ultra L250-H S12** is used for condensate collection and drainage.
- **The KOMFORT Ultra L250-E S12** unit is equipped with a plate enthalpy cross-flow heat exchanger made of polymerized cellulose that recovers heat and humidity.
- Due to humidity recovery the enthalpy heat exchanger produces no condensate.
- The air flows are fully separated within the heat exchangers. Odours and contaminants contained in the extract air are not transferred to the supply air flow.
- Heat recovery is based on heat and/or humidity transfer through the plates of the heat exchanger. In the cold season supply air is heated in the heat exchanger by transferring the heat energy of warm and humid extract air to the cold fresh air. Heat recovery minimizes heat losses, which reduces the cost of space heating.
- In summer the heat exchanger performs reverse and intake air is cooled in the heat exchanger by the cooled extract air. This reduces load on air conditioners and saves electricity.
- The electronic frost protection system is used to prevent the heat exchanger freezing in cold seasons. In case of freezing danger communicated by the temperature sensor the supply fan is stopped to let warm extract air warm up the heat exchanger. After that the supply fan is turned on and the unit reverts to the normal operation mode.
- In summer, when the indoor and outdoor temperature difference is low heat recovery is not reasonable. In this case the heat exchanger can be temporary replaced with a summer block for warm seasons (available separately).

Air filtration

- Two built-in cassette filters with filtration class G4 provide efficient supply and extract air filtration.
- Optionally, a cassette F8 filter can be installed to provide efficient supply air filtration.

Control and automation

- Smooth motor speed control from 0 up to 100 % by means of the thyristor speed controller SGS E1 (included in the delivery).

Mounting

- Mounting to floor, ceiling or wall with fixing brackets.
- While mounting provide free access to the service panel for filter replacement and servicing.
- **The KOMFORT Ultra L250-H S12** unit mounting position must provide condensate collection and drainage.

Technical data

Parameters	KOMFORT Ultra L250-H	KOMFORT Ultra L250-E
Unit voltage [V / 50-60 Hz]	1 ~ 230	
Power [W]	148	
Current [A]	0.78	
Maximum air capacity [m^3/h]	250	
RPM	2700	
Sound pressure level at 3 m [dBA]	28-47	
Transported air temperature [°C]	from -25 up to +40	
Insulation	20 mm mineral wool	
Extract / supply filter	G4	
Replaceable filter*	G4 (F8 PM2.5 81 %)*	
Connected air duct diameter [mm]	125	
Heat recovery efficiency [%]	from 55 up to 78	from 52 up to 73
Humidity recovery efficiency [%]	-	from 27 up to 45
Heat exchanger type	cross-flow	
SEC class	A	
Heat exchanger material	aluminium	polymerized cellulose

*Replaceable filter kits are ordered separately.

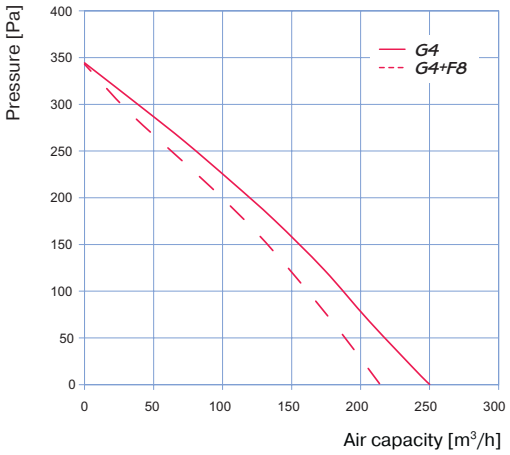

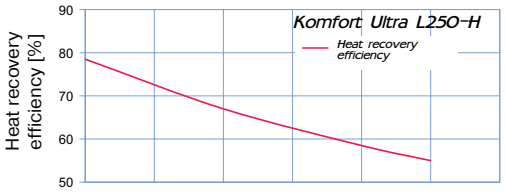

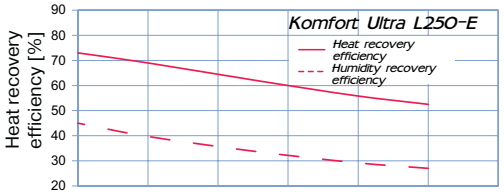

Overall dimensions, mm

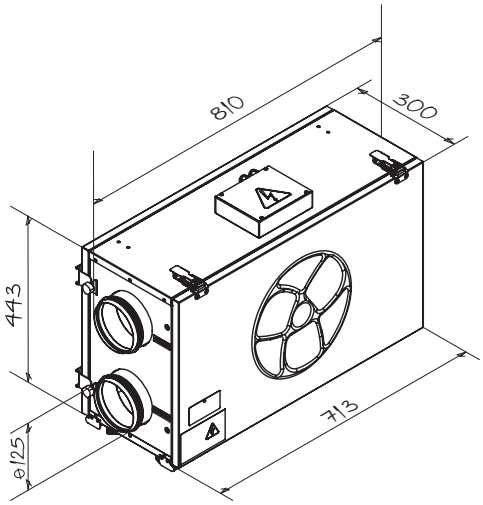

Compact heat recovery air handling units

KOMFORT Ultra EC S300

Air capacity – up to 300 m³/h

Heat recovery efficiency – up to 78 %

Application

- Air handling units for efficient supply and exhaust ventilation in flats, houses, cottages and other buildings.
- Heat recovery minimises ventilation heat losses.
- Control of air exchange for creating comfortable indoor microclimate.
- Compatible with round Ø125 mm air ducts.

Design

- The casing of **KOMFORT Ultra EC S300** is made of double-skinned aluzinc panels, internally filled with 20 mm mineral wool layer for heat and sound insulation.
- The casing of **KOMFORT Ultra EC S300 white** is made of double-skinned white painted metal panels, internally filled with 20 mm mineral wool layer for heat and sound insulation.
- The spigots are located at the top of the unit and are rubber sealed for airtight connection to the air ducts.
- The hinged panel of the casing ensures easy access to the unit internals for service works including cleaning, filter replacement, etc.

Fans

- The unit is equipped with high-efficient external rotor EC motors and centrifugal impellers with backward curved blades.
- EC motors have the best power consumption to air capacity ratio and meet the latest demands concerning energy saving and high-efficient ventilation.
- EC motors are featured with high performance, low noise level and totally controllable speed range.
- The impellers are dynamically balanced.

Heat recovery

- The **KOMFORT Ultra EC S300-H** unit is equipped with a plate cross-flow aluminium heat exchanger that recovers heat.
- The drain pan under the heat exchanger block of the **KOMFORT Ultra EC S300-H** is used for condensate collection and drainage.
- The **KOMFORT Ultra EC S300-E** unit is equipped with a plate enthalpy cross-flow heat exchanger made of polymerized cellulose that recovers heat and humidity.
- Due to humidity recovery the enthalpy heat exchanger produces no condensate.
- The air flows are fully separated within the heat exchangers. Odours and contaminants contained in the extract air are not transferred to the supply air flow.
- Heat recovery is based on heat and/or humidity transfer through the plates of the heat exchanger. In the cold season supply air is heated in the heat exchanger by transferring the heat energy of warm and humid extract air to the cold fresh air. Heat recovery minimizes heat losses, which reduces the cost of space heating. In summer the heat exchanger performs reverse and intake air is cooled in the heat exchanger by the cool extract air. This reduces load on air conditioners and saves electricity.
- The electronic frost protection system is used to prevent the heat exchanger freezing in cold seasons. In case of freezing danger communicated by the temperature sensor the supply fan is stopped to let warm extract air warm up the heat exchanger. After that the supply fan is turned on and the unit reverts to the normal operation mode.
- In summer, when the indoor and outdoor temperature difference is small heat recovery is not reasonable. In this case the heat exchanger can be temporary replaced with a summer block for warm seasons (available separately).

Air filtration

- Two built-in cassette filters with filtration class G4 provide efficient supply and extract air filtration.
- Optionally, a cassette F8 filter can be installed to provide efficient supply air filtration.

Control and automation

- **The KOMFORT Ultra EC S300 S2** unit is equipped with the CDT E/0-10 speed controller that is included in the delivery.
- The **KOMFORT Ultra EC S300 S14** unit has an integrated control system with a wall-mounted control panel S14 with a LED indication.

The KOMFORT Ultra EC S300 S14 control panel functions:

- Turning the unit on/off
- Speed selection: Low, Medium or High
- Activation of the summer ventilation mode: The supply fan stops and the extract fan continues its operation with no heat recovery
- Alarm indication
- Filter maintenance indication

The KOMFORT Ultra EC S300 S14 unit is equipped with a USB connector (Type B) and can be connected to a PC for configuring the advanced settings in a special software:

- Fan speed adjustment from 0 to 100 %. Each speed is individually adjusted for the supply and the extract fans
- Operation control on feedback from the FS2 duct humidity sensor (available separately)
- Unit operation setting according to external control unit (available separately)
- Temperature setting for freeze protection system activation
- Control and operation adjustment of the filter maintenance timer
- Error code indication
- External control unit and humidity level control
- Software version upgrading

Mounting

- Mounting to floor, ceiling or wall with fixing brackets.
- While mounting provide free access to the service panel for filter replacement and servicing.
- The **KOMFORT Ultra EC S300-H** unit mounting position must provide condensate collection and drainage.

Technical data

Parameters	KOMFORT Ultra EC S300-H	KOMFORT Ultra EC S300-E
Unit voltage [V / 50-60 Hz]	1 ~ 230	
Power [W]	156	
Current [A]	1.17	
Maximum air capacity [m³/h]	300	
RPM	3200	
Sound pressure level at 3 m [dBA]	28-47	
Transported air temperature [°C]	from -25 up to +60	
Insulation	20 mm mineral wool	
Extract / supply filter	G4	
Replaceable filter*	G4 (F8 PM2.5 81 %)*	
Connected air duct diameter [mm]	125	
Heat recovery efficiency [%]	from 52 up to 78	from 50 up to 73
Humidity recovery efficiency [%]	-	from 25 up to 45
Heat exchanger type	cross-flow	
SEC class	A	
Heat exchanger material	aluminium	polymerized cellulose

*Replaceable filter kits are ordered separately.

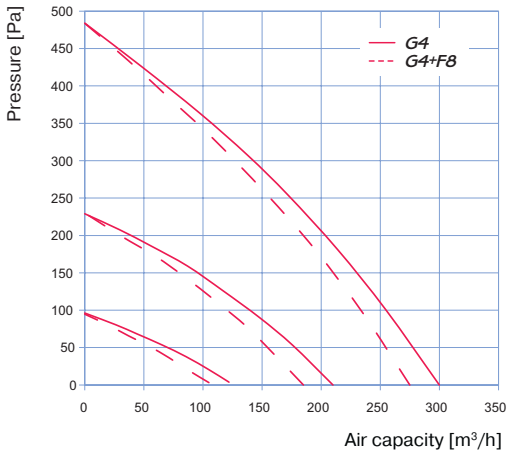

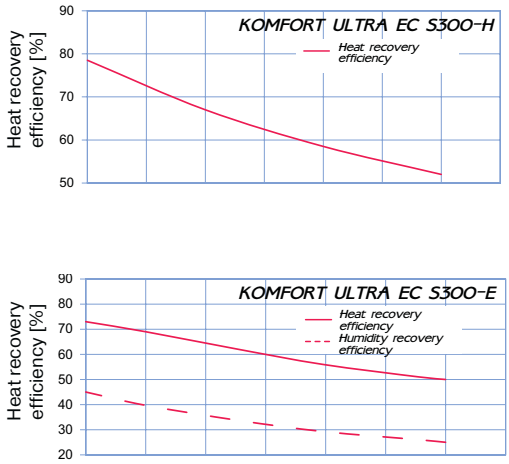

Overall dimensions, mm

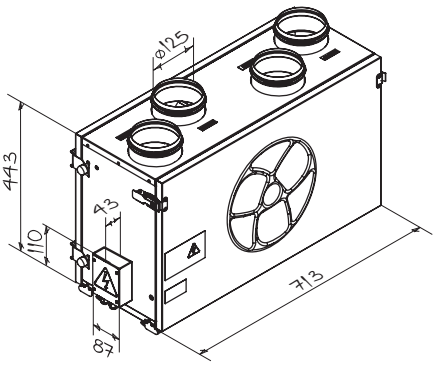

KOMFORT Ultra EC S300 S2

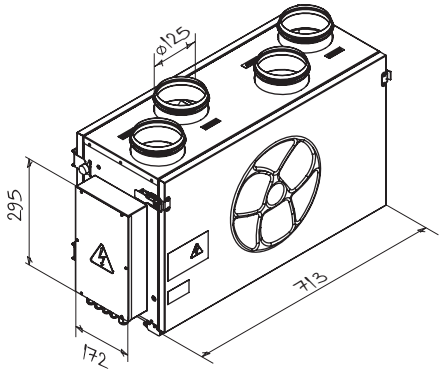

KOMFORT Ultra EC S300 S14

Compact heat recovery air handling units

KOMFORT Ultra EC L300

Air capacity – up to 300 m³/h

Heat recovery efficiency – up to 78 %

Application

- Air handling units for efficient supply and exhaust ventilation in flats, houses, cottages and other buildings.
- Heat recovery minimises ventilation heat losses.
- Control of air exchange for creating comfortable indoor microclimate.
- Compatible with round Ø125 mm air ducts.

Design

The casing of **KOMFORT Ultra EC L300** is made of double-skinned aluzinc panels, internally filled with 20 mm mineral wool layer for heat- and sound-insulation.

The casing of **KOMFORT Ultra EC L300** white is made of double-skinned white painted metal panels, internally filled with 20 mm mineral wool layer for heat- and sound-insulation.

The spigots are located at the top of the unit and are rubber sealed for airtight connection to the air ducts.

The hinged panel of the casing ensures easy access to the unit internals for service works including cleaning, filter replacement, etc.

Fans

The unit is equipped with high-efficient external rotor EC motors and centrifugal impellers with backward curved blades.

EC motors have the best power consumption to air capacity ratio and meet the latest demands concerning energy saving and high-efficient ventilation.

EC motors are featured with high performance, low noise level and totally controllable speed range.

The impellers are dynamically balanced.

Heat recovery

The **KOMFORT Ultra EC L300-H** unit is equipped with a plate cross-flow aluminium heat exchanger that recovers heat.

The drain pan under the heat exchanger block of the **KOMFORT Ultra EC L300-H** is used for condensate collection and drainage.

The **KOMFORT Ultra EC L300-E** unit is equipped with a plate enthalpy heat exchanger made of polymerized cellulose that recovers heat and humidity.

Due to humidity recovery the enthalpy heat exchanger produces no condensate.

The air flows are fully separated within the heat exchangers. Odours and contaminants contained in the extract air are not transferred to the supply air flow.

Heat recovery is based on heat and/or humidity transfer through the plates of the heat exchanger. In cold season supply air is heated in the heat exchanger by transferring the heat energy of warm and humid extract air to the cold fresh air. Heat recovery minimizes heat losses, which reduces the cost of space heating. In summer the heat exchanger performs reverse and intake air is cooled in the heat exchanger by the cooled extract air. This reduces load on air conditioners and saves electricity.

The electronic frost protection system is used to prevent the heat exchanger freezing in cold seasons. In case of freezing danger communicated by the temperature sensor the supply fan is stopped to let warm extract air warm up the heat exchanger. After that the supply fan is turned on and the unit reverts to the normal operation mode.

In summer, when the indoor and outdoor temperature difference is small heat recovery is not reasonable. In this case the heat exchanger can be temporary replaced with a summer block for warm seasons. Available upon separate order.

Air filtration

Two built-in cassette filters with filtration class G4 provide efficient supply and extract air filtration.

Optionally, a cassette F8 filter can be installed to provide efficient supply air filtration.

Control and automation

The KOMFORT Ultra EC L300 S2 unit is equipped with the CDT E/0-10 speed controller that is included in the delivery.

The **KOMFORT Ultra EC L300 S14** unit has an integrated control system with a wall-mounted control panel S14 with a LED indication.

The KOMFORT Ultra EC L300 S14 control panel functions:

- Turning the unit on/off
- Speed selection: Low, Medium or High
- Activation of the summer ventilation mode: The supply fan stops and the extract fan continues its operation with no heat recovery
- Alarm indication
- Filter maintenance indication

The KOMFORT Ultra EC L300 S15 unit is equipped with a USB connector (Type B) and can be connected to a PC for configuring the advanced settings in a special software:

- Fan speed adjustment from 0 to 100 %. Each speed is individually adjusted for the supply and the extract fans
- Operation control on feedback from the FS2 duct humidity sensor (available separately)
- Unit operation setting according to external control unit (available separately)
- Temperature setting for freeze protection system activation
- Control and operation adjustment of the filter maintenance timer
- Error code indication
- External control unit and humidity level control
- Software version upgrading

Mounting

Mounting to floor, ceiling or wall with fixing brackets.

While mounting provide free access to the service panel for filter replacement and servicing.

The **KOMFORT Ultra EC L300-H** unit mounting position must provide condensate collection and drainage.

Technical data

Parameters	KOMFORT Ultra EC L300-H	KOMFORT Ultra EC L300-E
Unit voltage [V / 50-60 Hz]	1 ~ 230	
Power [W]	156	
Current [A]	1.17	
Maximum air capacity [m³/h]	300	
RPM	3200	
Sound pressure level at 3 m [dBA]	28-47	
Transported air temperature [°C]	from -25 up to +60	
Insulation	20 mm mineral wool	
Extract / supply filter	G4	
Replaceable filter*	G4 (F8 PM2.5 81 %)*	
Connected air duct diameter [mm]	Ø125	
Heat recovery efficiency [%]	from 52 up to 78 %	from 50 up to 73 %
Humidity recovery efficiency [%]	-	from 25 up to 45 %
Heat exchanger type	cross-flow	
SEC class	A	
Heat exchanger material	aluminium	polymerized cellulose

*Replaceable filter kits are ordered separately.

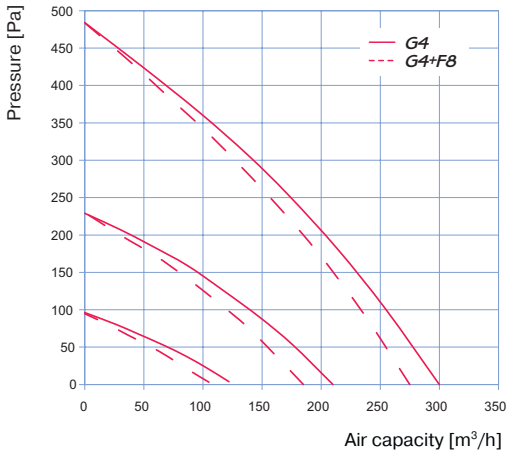

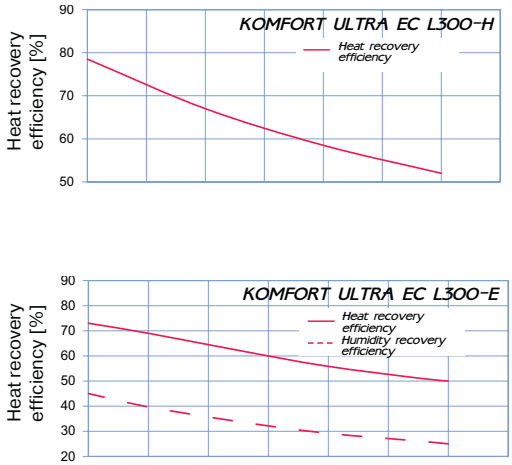

Overall dimensions, mm

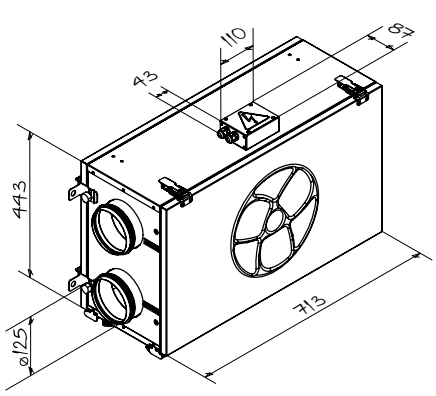

KOMFORT Ultra EC L300 S2

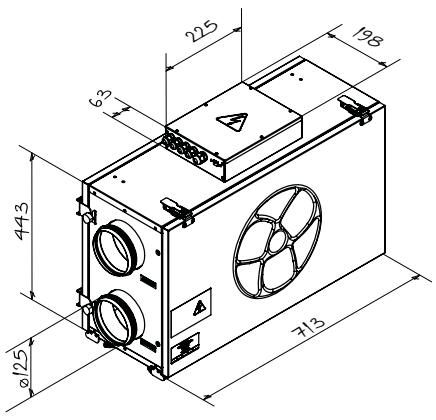

KOMFORT Ultra EC L300 S14

Heat recovery air handling units

KOMFORT L

Air capacity – up to 2200 m³/h

Heat recovery efficiency – up to 88 %

Application

- Air handling units for efficient supply and exhaust ventilation in flats, houses, cottages and other buildings.
- Heat recovery minimises ventilation heat losses.
- Control of air exchange for creating comfortable indoor microclimate.
- Compatible with round Ø125 to 315 mm air ducts.

Design

- The casing is made of aluminium profile and double-skinned aluzinc panels, internally filled with mineral wool layer for heat and sound insulation.
- The casing has fixing brackets with vibration absorbing connectors for easy installation.
- The spigots for connection to the air ducts are located at the side of the unit and are rubber sealed for airtight connection to the air ducts.
- The hinged casing side panels ensure easy access to the internals for cleaning, filter replacement and other maintenance operations.

Fans

- Asynchronous external rotor motors and centrifugal double-intake impellers with forward curved blades are used for air supply and exhaust.
- Integrated motor overheating protection with automatic restart.
- Dynamically balanced impellers.
- Equipped with ball bearings for longer service life.
- Reliable and quiet operation.

Heat recovery

- The unit is equipped with a cross-flow aluminium heat exchanger with a large surface area and high heat recovery efficiency.
- The air flows are fully separated within the heat exchanger. Odours and contaminants contained in the extract air are not transferred to the supply air flow.
- Heat recovery is based on the utilization of the thermal energy of the extract air for heating up supply air. Extract air transfers most of its heat to the intake air flow. Heat recovery reduces heat losses in cold seasons. In summer the heat exchanger performs reverse and intake air is cooled in the heat exchanger by the cool extract air.This contributes to better performance of the air conditioner in ventilated premises.
- The built-in freezing protection system automatically turns the supply fan off in case of a freezing danger to enable warming of the heat exchanger with the warm extract air flow. When a freezing danger is over the the supply fan is turned on and the unit reverts to previous operation mode.
- The drain pan under the heat exchanger block is used for condensate collection and drainage.
- Heat recovery is not useful in warm season with small indoor and outdoor temperature difference. In this case the heat exchanger may be temporary replaced with a summer block (available separately).

Air filtration

- Two built-in G4 cassette filters provide efficient supply and extract air filtration. Optionally, an F7 supply filter may be used (special accessory).

Control and automation

- Speed control by means of the four-position speed switch CDP-3/5 that enables setting low, medium, maximum speed and turning the unit off.

Mounting

- Mounting to floor, ceiling or wall with fixing brackets.
- The correct mounted unit must provide condensate collecting and drainage and free access to the hinged side panel for servicing and filter replacement.

Technical data

Parameters	KOMFORT L350	KOMFORT L500	KOMFORT L530	KOMFORT L600	KOMFORT L1200	KOMFORT L2200
Voltage [V]	1 ~ 230 / 50-60 Hz				1 ~ 230 /50 Hz	1 ~ 230 /50-60 Hz
Power [kW]	0.26	0.3	0.3	0.39	0.82	1.3
Current [A]	1.2	1.32	1.32	1.72	3.6	5.68
Air capacity [m^3/h]	350	500	530	600	1200	2200
RPM	1150	1100	1100	1350	1850	1150
Sound pressure level at 3 m [dBA]	24-45	28-47	28-47	32-48	60	65
Transported air temperature [°C]	-25 up to 55	-25 up to 50		-25 up to 55	-25 up to 40	
Casing material	aluzinc					
Insulation	25 mm mineral wool				50 mm mineral wool	
Extract filter	cassette G4					
Supply filter	cassette F7				cassette G4 (F7)*	
Connected air duct diameter [mm]	125	150	160	200	250	315
Weight [kg]	45	49	49	54	85	96
Heat recovery efficiency [%]**	up to 78	up to 88		up to 85	up to 88	up to 87
Heat exchanger type	cross-flow					
SEC class***	E				-	-
Heat exchanger material	aluminum					

*Option.
** Heat recovery efficiency is specified in compliance with the EN308 EU norms.
*** The EC norm 1254/2014 does not apply if maximum air capacity is >1000 m^3/h

Overall dimensions

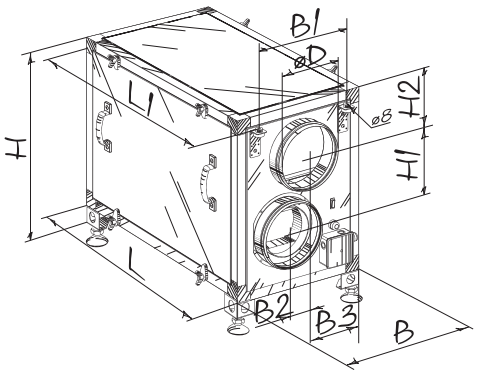

Model	Dimensions [mm]									
	ØD	B	B1	B2	B3	H	H1	H2	L	L1
KOMFORT L350	124	416	300	54	207	603	230	148	722	768
KOMFORT L500	149	416	300	54	207	603	230	148	722	768
KOMFORT L530	159	416	300	54	207	603	230	148	722	768
KOMFORT L600	199	416	300	54	207	603	230	148	722	768
KOMFORT L1200	248	548	496	60	213	794	290	200	802	850
KOMFORT L2200	313	846	796	235	588	968	360	246	1000	1050

Accessories

Model	Replaceable filter G4 (cassette)	Replaceable filter F7 (cassette)	Summer block
KOMFORT L350	FP-L350-600 G4	FP-L350-600 F7	SB-L350
KOMFORT L500			SB-L500-600
KOMFORT L530			
KOMFORT L600			
KOMFORT L1200	FP-L1200 G4	FP-L1200 F7	SB-L1200
KOMFORT L2200	FP-L2200 G4	FP-L2200 F7	SB-L2200

Technical data

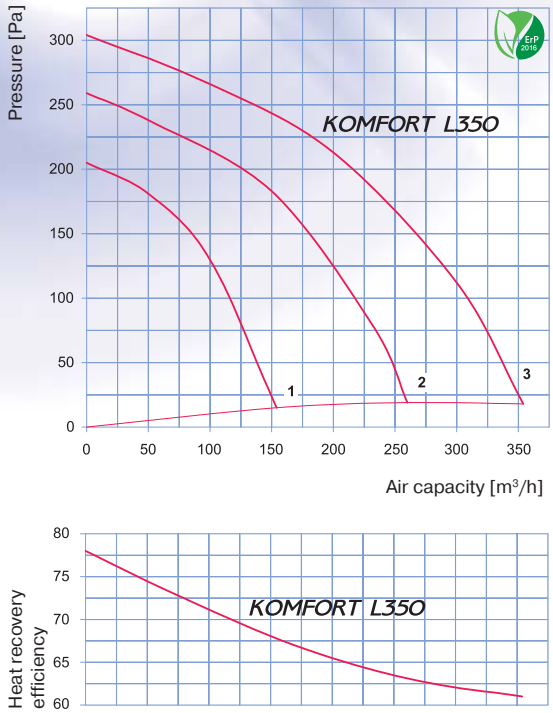

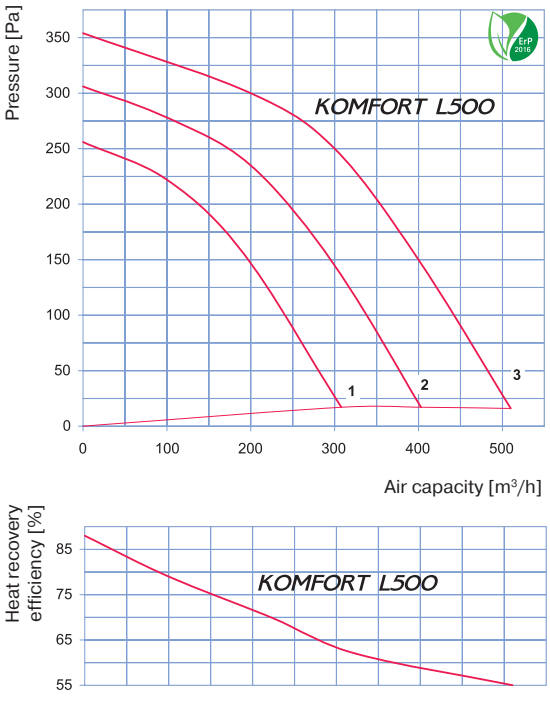

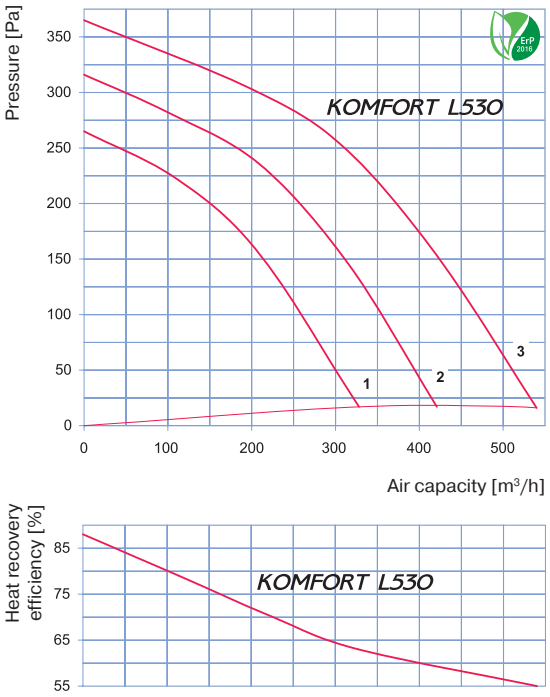

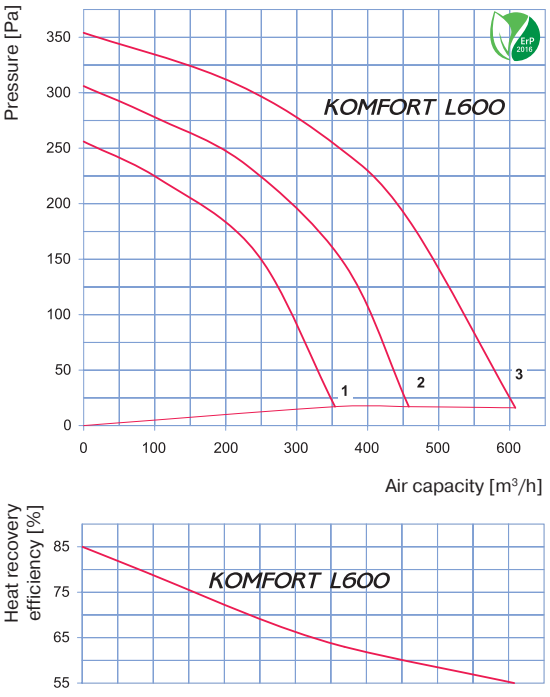

Technical data

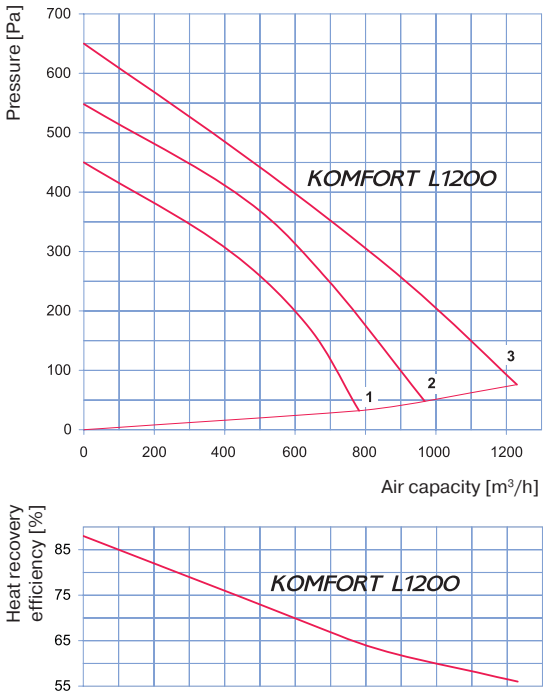

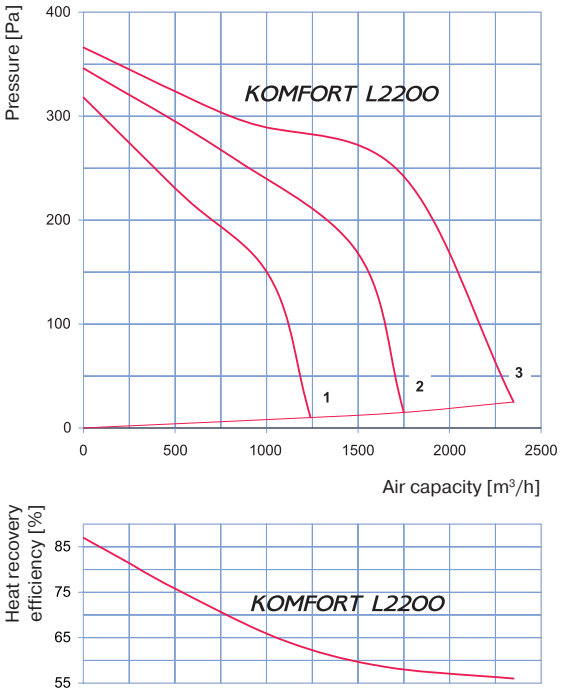

Heat recovery air handling units

KOMFORT LE

Air capacity – up to 2200 m³/h
Heat recovery efficiency – up to 88 %

Application

- Air handling units for efficient supply and exhaust ventilation in flats, houses, cottages and other buildings.
- Heat recovery minimises ventilation heat losses.
- Control of air exchange for creating comfortable indoor microclimate.
- Compatible with round Ø125 to 315 mm air ducts.

Design

- The casing is made of double-skinned aluzinc panels, internally filled with 25 mm mineral wool layer for heat and sound insulation.
- The casing has fixing brackets with vibration absorbing connectors for easy installation.
- The spigots for connection to the air ducts are located at the side of the unit and are rubber sealed for airtight connection to the air ducts.
- The hinged casing side panels ensure easy access to the internals for cleaning, filter replacement and other maintenance operations.

Fans

- Asynchronous external rotor motors and centrifugal double-intake impellers with forward curved blades are used for air supply and exhaust.
- Integrated motor overheating protection with automatic restart.
- Dynamically balanced impellers.
- Equipped with ball bearings for longer service life.
- Reliable and quiet operation.

Heat recovery

- The unit is equipped with a plate cross-flow aluminium heat exchanger with a large surface area and high heat recovery efficiency.
- The air flows are fully separated within the heat exchanger. Odours and contaminants contained in the extract air are not transferred to the supply air flow.
- Heat recovery is based on the utilization of the thermal energy of the extract air for heating up supply air. Extract air transfers most of its heat to the intake air flow. Heat recovery reduces heat losses in cold seasons. In summer the heat exchanger performs reverse and intake air is cooled in the heat exchanger by the cool extract air. This contributes to better performance of the air conditioner in ventilated premises.
- The electronic protection system based on bypass and heater is used for freezing protection of the unit in cold seasons. The bypass damper is opened and the heater is turned on automatically according to temperature sensor readings. Cold intake air passes by the heat exchanger and is warmed up to set temperature in the heat exchanger. Synchronously extract air that passes by the heat exchanger is used for its defrosting. After a freezing danger is over the bypass damper is closed, the heater is turned off. The heat exchanger reverts to the normal operation mode.
- The drain pan under the heat exchanger block is used for condensate collection and drainage.

Air heater

- The unit is equipped with an electric heater for operation during cold seasons at low outside temperature.
- The integrated electric heater is activated to warm up supply air flow if set indoor air temperature may not be reached by means of heat recovery only.
- Smooth heat output control ensures automatic supply air temperature maintaining.
- Two integrated overheat protection thermostats, one actuated at +60 °C with automatic restart and the other one actuated at +90 °C with manual restart.

Air filtration

- The built-in F7 cassette supply filter and G4 cassette extract filter provide efficient air filtration.

Control and automation

- The unit incorporates an integrated control system with a wall-mounted control panel and LCD display.
- The standard delivery set includes a 10 m cable for connection of the unit and the control panel.
- Control panel functions:
  - Activating/Deactivating the unit.
  - Setting required fan speed.
  - Setting and maintaining supply air temperature.
  - Displaying indoor temperature.
  - Setting week-scheduled operation of the unit.
- Automation functions:
  - Controlling supply and exhaust air dampers (available separately).
  - Filter clogging control.
  - Preventing overheating of the electric heating elements.
  - Disabling heater activation during the fan shutoff.
- The control system is short circuit protected with an automatic circuit breaker.

Mounting

- Mounting to floor, ceiling or wall with fixing brackets.
- The correct mounted unit must provide condensate collecting and drainage and free access to the hinged side panel for servicing and filter replacement.

Overall dimensions

Model	Dimensions [mm]											
	ØD	B	B1	B2	B3	H	H1	H2	H3	L	L1	L2
KOMFORT LE350-3	124	497	403	248	348	554	-	111	230	954	996	1054
KOMFORT LE500-3	149	497	403	248	348	554	-	111	230	954	996	1054
KOMFORT LE530-4	159	497	403	248	348	554	-	111	230	954	996	1054
KOMFORT LE600-4	199	497	403	248	348	554	-	111	230	954	996	1054
KOMFORT LE800-9	249	613	460	306	386	698	832	154	280	1071	1117	1171
KOMFORT LE1200-9	249	613	460	306	386	698	832	154	280	1071	1117	1171
KOMFORT LE1700-18	314	842	581	320	520	814	947	201	595	1345	1388	1445
KOMFORT LE2200-18	314	842	581	320	520	814	947	201	595	1345	1388	1445

Accessories

Model	Replaceable filter G4 (cassette)	Replaceable filter F7 (cassette)
KOMFORT LE350-3	FP-LE350-600 G4	FP-LE350-600 F7
KOMFORT LE500-3		
KOMFORT LE530-4		
KOMFORT LE600-4		
KOMFORT LE800-9	FP-LE1200 G4	FP-LE1200 F7
KOMFORT LE1200-9		
KOMFORT LE1700-18	FP-LE2200 G4	FP-LE2200 F7
KOMFORT LE2200-18		

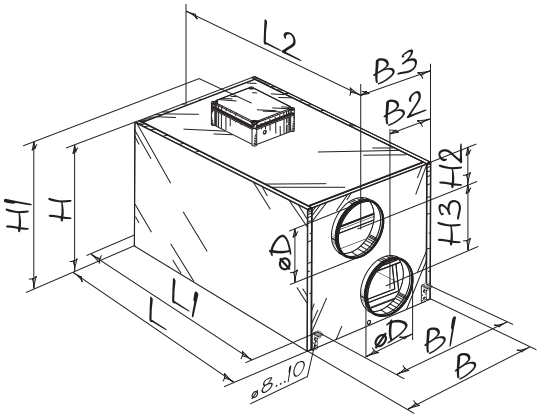

Application example

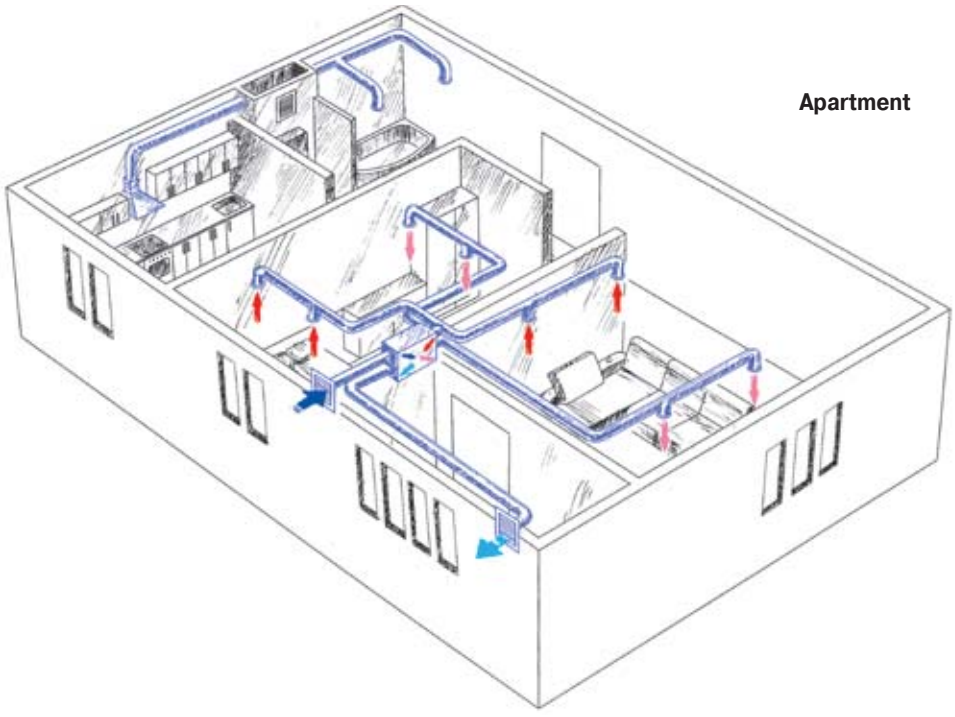

Apartment

Technical data

Parameters	KOMFORT LE350-3	KOMFORT LE500-3
Voltage [V]	1 ~ 230 / 50-60 Hz	
Fan power [kW]	0.26	0.3
Fan current [A]	1.2	1.32
Electric heater power [kW]	3	
Electric heater current [A]	13	
Total unit power [kW]	3.26	3.3
Total unit current [A]	14.2	14.32
Maximum air capacity [m³/h]	350	500
RPM	1150	1100
Sound pressure level at 3 m distance [dB(A)]	24-45	28-47
Transported air temperature [°C]	-25 up to +55	-25 up to +50
Casing material	aluzinc	
Insulation	25 mm mineral wool	
Extract filter	cassette G4	
Supply filter	cassette F7	
Connected air duct diameter [mm]	125	150
Weight [kg]	45	49
Heat recovery efficiency [%]*	up to 78	up to 88
Heat exchanger type	cross-flow	
SEC class	E	
Heat exchanger material	aluminum	

* Heat recovery efficiency is specified in compliance with the EN308 EU norms.

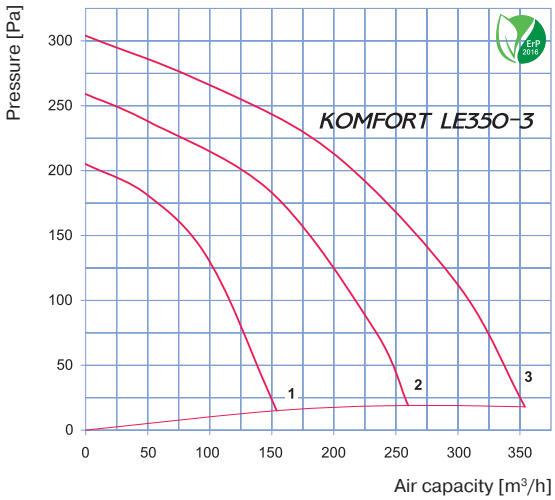

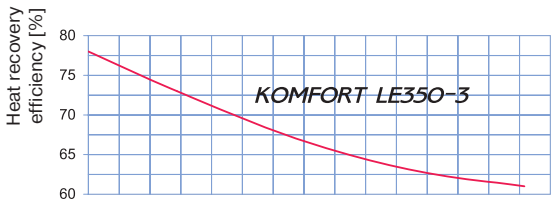

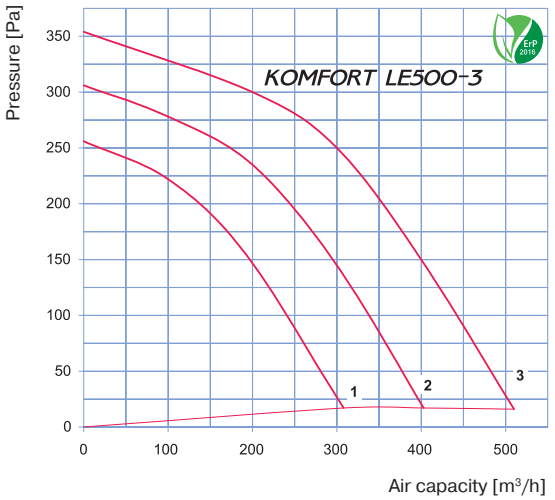

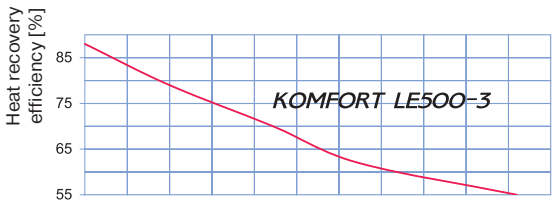

Technical data

Parameters	KOMFORT LE530-4	KOMFORT LE600-4
Voltage [V]	1 ~ 230 / 50-60 Hz	
Fan power [kW]	0.3	0.39
Fan current [A]	1.32	1.72
Electric heater power [kW]	4	
Electric heater current [A]	17.4	
Total unit power [kW]	4.3	4.39
Total unit current [A]	18.72	19.1
Maximum air capacity [m³/h]	530	600
RPM	1100	1350
Sound pressure level at 3 m distance [dB(A)]	28-47	32-48
Transported air temperature [°C]	-25 up to +50	-25 up to +55
Casing material	aluzinc	
Insulation	25 mm mineral wool	
Extract filter	cassette G4	
Supply filter	cassette F7	
Connected air duct diameter [mm]	160	200
Weight [kg]	49	54
Heat recovery efficiency [%]*	up to 88	up to 85
Heat exchanger type	cross-flow	
SEC class	E	
Heat exchanger material	aluminum	

* Heat recovery efficiency is specified in compliance with the EN308 EU norms.

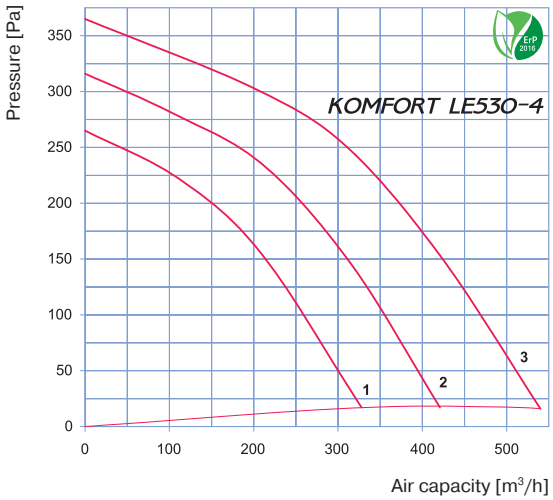

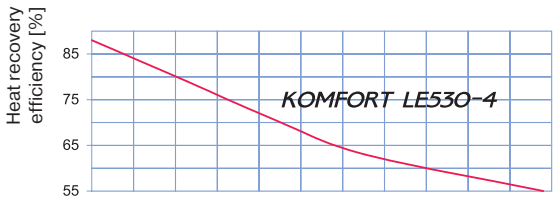

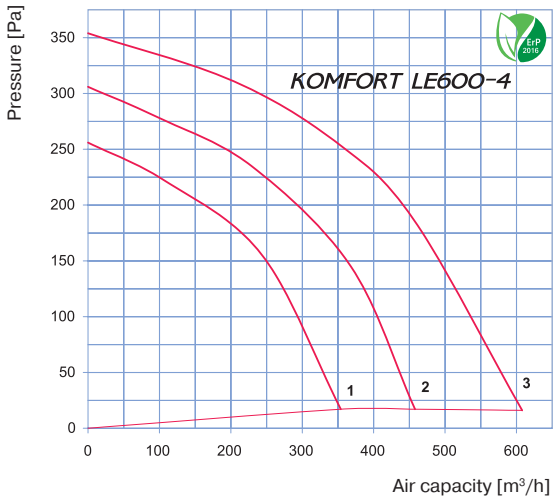

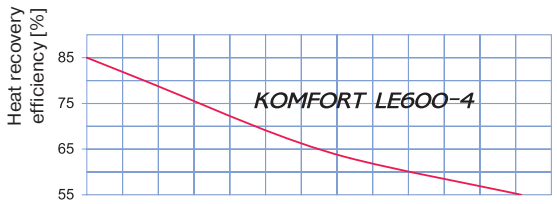

Technical data

Parameters	KOMFORT LE800-9	KOMFORT LE1200-9
Voltage [V]	3 ~ 400 / 50-60 Hz	3 ~ 400 / 50 Hz
Fan power [kW]	0.49	0.82
Fan current [A]	2.16	3.6
Electric heater power [kW]	9.0	
Electric heater current [A]	13.0	
Total unit power [kW]	9.49	9.80
Total unit current [A]	15.16	16.6
Maximum air capacity [m^3/h]	800	1200
RPM	1650	1850
Sound pressure level at 3 m distance [dB(A)]	48	60
Transported air temperature [°C]	-25 up to +45	-25 up to +40
Casing material	aluzinc	
Insulation	25 mm mineral wool	
Extract filter	cassette G4	
Supply filter	cassette F7	
Connected air duct diameter [mm]	250	
Weight [kg]	85	
Heat recovery efficiency [%]*	up to 78	
Heat exchanger type	cross-flow	
SEC class**	E	-
Heat exchanger material	aluminum	

* Heat recovery efficiency is specified in compliance with the EN308 EU norms.
** The EC norm 1254/2014 does not apply if maximum air capacity is >1000 m^3/h

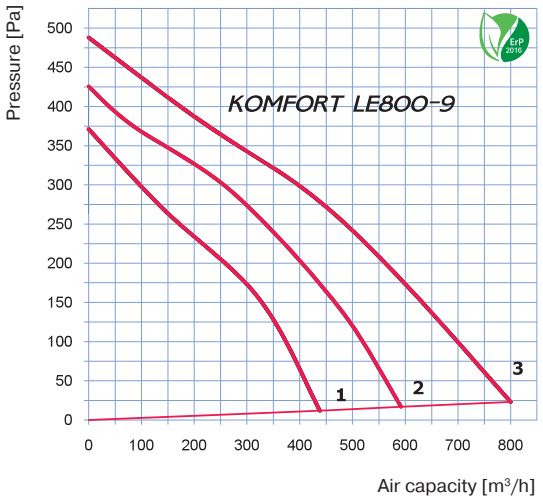

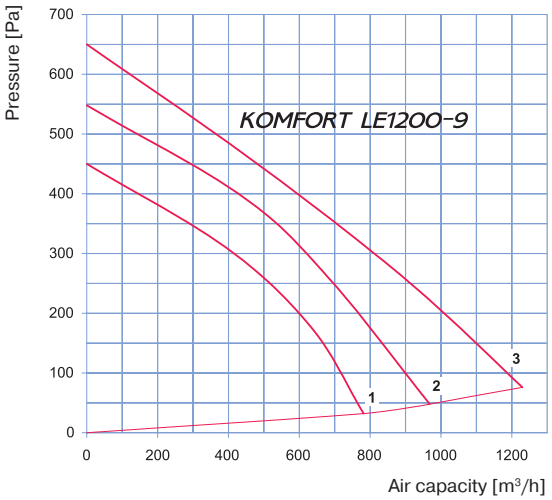

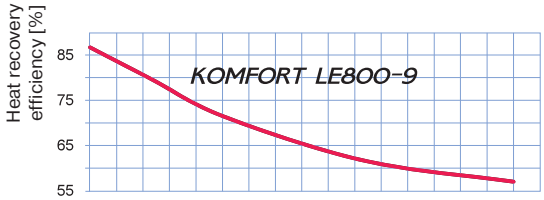

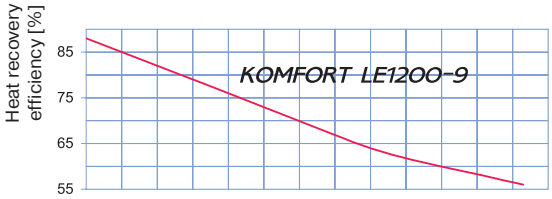

Technical data

Parameters	KOMFORT LE1700-18	KOMFORT LE2200-18
Voltage [V]	3 ~ 400 / 50-60 Hz	
Fan power [kW]	0.98	1.3
Fan current [A]	4.3	5.68
Electric heater power [kW]	18.0	
Electric heater current [A]	26.0	
Total unit power [kW]	18.98	19.30
Total unit current [A]	30.3	31.7
Maximum air capacity [m^3/h]	1750	2200
RPM	1100	1150
Sound pressure level at 3 m distance [dB(A)]	49	65
Transported air temperature [°C]	-25 up to +45	-25 up to +40
Casing material	aluzinc	
Insulation	25 mm mineral wool	
Extract filter	cassette G4	
Supply filter	cassette F7	
Connected air duct diameter [mm]	315	
Weight [kg]	96	
Heat recovery efficiency [%]*	up to 77	
Heat exchanger type	cross-flow	
SEC class**	-	
Heat exchanger material	aluminum	

* Heat recovery efficiency is specified in compliance with the EN308 EU norms.
** The EC norm 1254/2014 does not apply if maximum air capacity is >1000 m^3/h

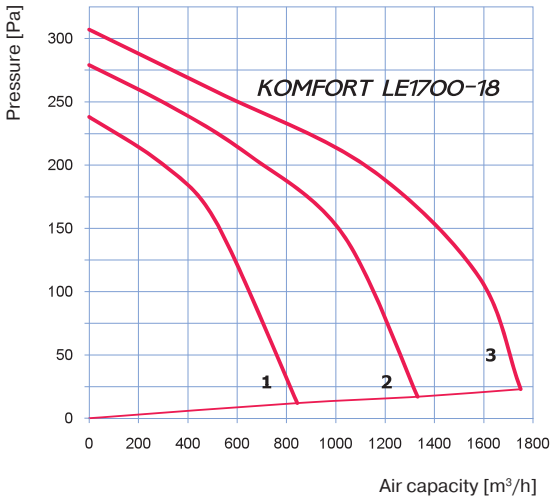

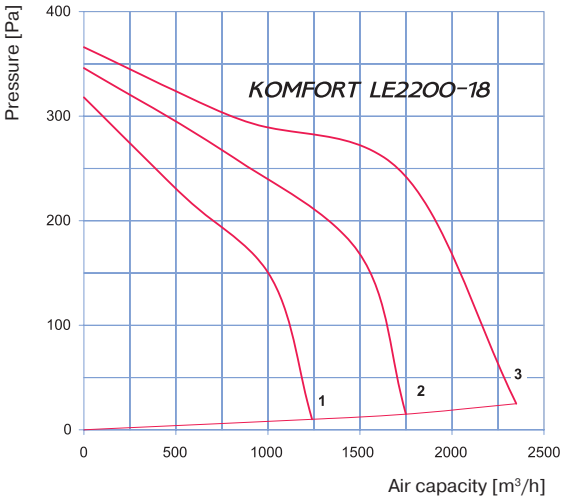

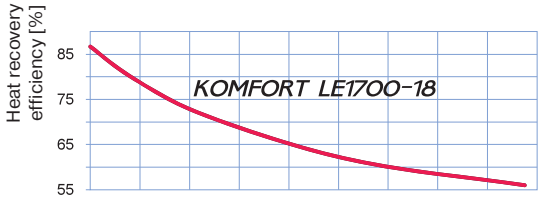

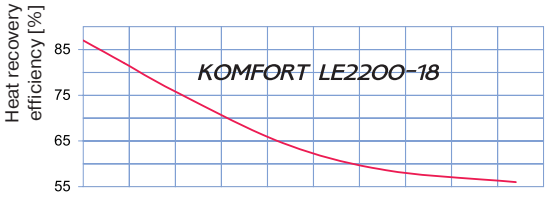

Heat recovery air handling units

KOMFORT EC L

Air capacity – up to 810 m³/h
Heat recovery efficiency – up to 98 %

Application

- Air handling units for efficient supply and exhaust ventilation in flats, houses, cottages and other buildings.
- Controllable mechanical energy saving ventilation systems.
- Heat recovery minimises ventilation heat losses.
- Regulated air exchange creates individually controlled microclimate.
- Compatible with round Ø150, 160, 200 and 250 mm air ducts.

Design

- The casing is made of double-skinned aluzinc panels, internally filled with 25 mm mineral wool layer for heat and sound insulation.
- The casing is equipped with adjustable leveling feet on the bottom panel that enable the unit installation on the floor. **The KOMFORT EC L300 S6, L1/300 S6** and **L400 S6** models include a fixing bracket for wall mounting.
- The spigots for connection to the air ducts are located at the side of the unit and are rubber sealed for airtight connection to the air ducts.
- The service access to filters is on the side panel which can be installed on the left or on the right, seen on the supply air flow direction, during the unit mounting.

Fans

- High-efficient external rotor EC-motors are used for air supply and exhaust.
- The **KOMFORT EC L300 S6, L1/300 S6** and **L400 S6** units are equipped with constant flow fans and forward curved blades. This fan design ensures set air flow even in case of variable resistance in the ventilation system, i.e. in case of filter clogging.
- The **KOMFORT EC L600 S6** unit includes fans with backward curved blades.
- EC motors have the best power consumption to air capacity ratio and meet the latest demands concerning energy saving and high-efficient ventilation.
- EC motors are featured with high performance, low noise level and totally controllable speed range.
- Dynamically balanced impellers.

Heat recovery

- The unit is equipped with a plate counter-flow polystyrene heat exchanger with a large surface area and high heat recovery efficiency.
- The air streams are fully separated within the heat exchanger. Odours and contaminants contained in the extract air are not transferred to the supply air flow.
- Heat recovery is based on the utilization of the heat energy contained in the extract air for heating up of supply air stream in the heat exchanger. Extract air transfers most of its heat to the intake fresh air stream. This technology significantly reduces heat losses in cold seasons. In summer the heat exchanger performs reverse and intake air is cooled in the heat exchanger by the cool extract air. This contributes to better performance of the air conditioner in ventilated premises.
- The integrated freeze protection system is used to prevent the heat exchanger freezing. In case of a freezing danger communicated by the temperature sensor the supply fan is turned off. The warm extract air warms up the heat exchanger. After that the the supply fan is turned on and the unit reverts to the normal operation mode.
- The drain pan under the heat exchanger block is used for condensate collection and drainage.
- Heat recovery is not useful in warm season with low indoor and outdoor temperature difference. In this case the heat exchanger may be temporary replaced with a summer block (available separately).

Air filtration

- Two built-in G4 cassette filters provide efficient supply and extract air filtration. Optionally, a F7 supply filter may be used (special accessory).

Control and automation

- The unit incorporates an integrated control system, a wall-mounted control panel with an LCD display and a remote control.
- Automation functions:

• Activating/deactivating the unit.
• Setting low, medium and high speeds for the supply and extract fan. Each speed is individually adjusted during set-up.
• Controlling supply and exhaust air dampers (available separately).
• Unit shutdown on signal from a fire alarm panel.
• Switching to the maximum speed in case of activation of a CO_2 sensor, humidity sensor, IAQ sensor or any other sensor (available separately).
• Filter clogging control and indication by operating hours.
• Setting week-scheduled operation of the unit.

Mounting

- Floor, ceiling or wall mounting with a fixing bracket.
- The proper unit mounting position provides condensate collecting and drainage and free access to the side panels for servicing and filter replacement.

Overall dimensions

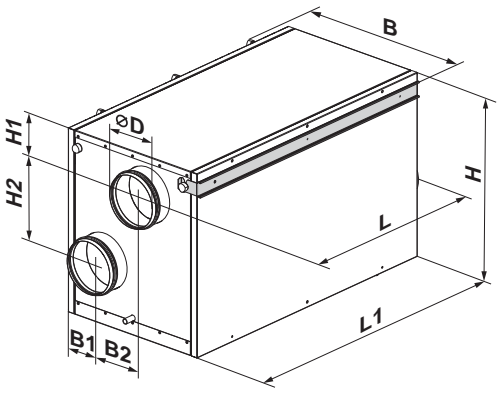

Model	Dimensions [mm]								
	ØD	B	B1	B2	H	H1	H2	L	L1
KOMFORT EC L300 S6	150	455	130	140	525	105	220	945	830
KOMFORT EC L1/300 S6	160	455	130	140	525	105	220	945	830
KOMFORT EC L400 S6	200	570	165	230	540	135	225	925	830
KOMFORT EC L600 S6	250	840	215	390	660	160	295	1010	890

Accessories

Model	Replaceable filter G4 (cassette)	Replaceable filter F7 (cassette)	Summer block
KOMFORT EC L300 S6	FP-EC L300 G4	FP-EC L300 F7	SB-EC L300
KOMFORT EC L1/300 S6			
KOMFORT EC L400 S6	FP-EC L400 G4	FP-EC L400 F7	SB-EC L400
KOMFORT EC L600 S6	FP-EC L600 G4	FP-EC L600 F7	SB-EC L600

Technical data

Parameters	**KOMFORT EC L300 S6**	**KOMFORT EC L1/300 S6**	**KOMFORT EC L400 S6**	**KOMFORT EC L600 S6**
Voltage [V / 50-60 Hz]	1 ~ 230			
Power [кW]	0.14		0.21	0.334
Current [A]	1.2		1.6	2.2
Maximum air capacity [m^3/h]	300		400	810
RPM	2300		2600	2860
Sound pressure level at 3 m [dBA]	24-45		30-45	
Transported air temperature [°C]	-25 up to +60			
Casing material	aluzinc			
Insulation	25 mm mineral wool			
Extract filter	panel G4			
Supply filter	panel G4 (F7)*			
Connected air duct diameter [mm]	150	160	200	250
Weight [kg]	36		67	83
Heat recovery efficiency [%]**	86 up to 98			81 up to 98
Heat exchanger type	counter-flow			
SEC class	A+	A+	A	A
Heat exchanger material	polystyrene			

* Option.
** Heat recovery efficiency is specified in compliance with the EN308 EU norms.

Technical data

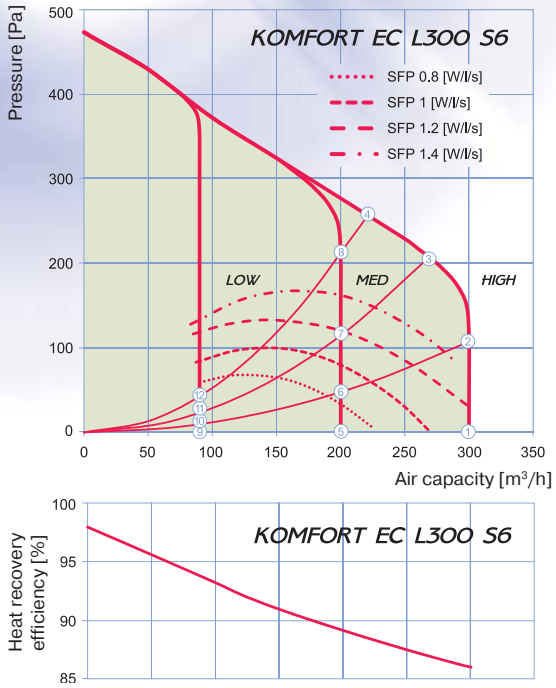

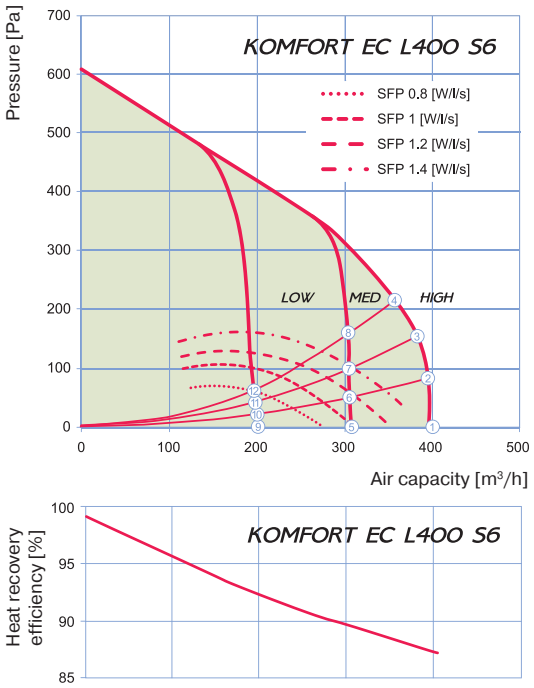

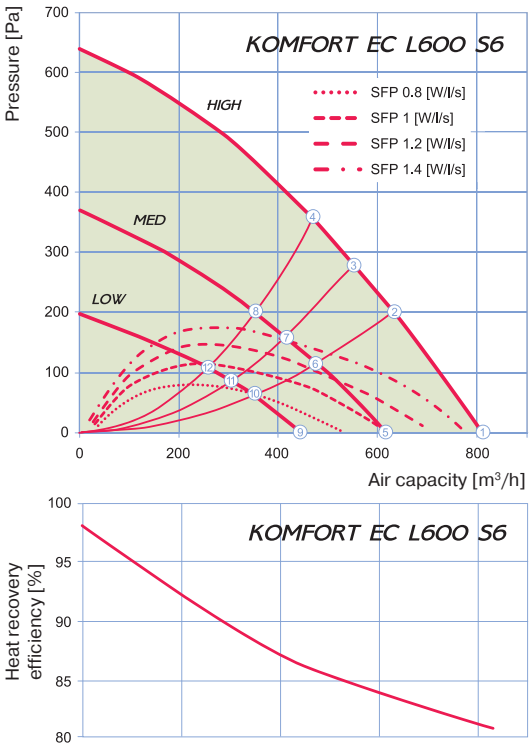

Point	Power [W]		
	KOMFORT EC L300 S6 KOMFORT EC L1/300 S6	**KOMFORT EC L400 S6**	**KOMFORT EC L600 S6**
1	93	139	333
2	120	187	334
3	137	219	333
4	122	226	327
5	36	87	179
6	42	101	178
7	60	116	174
8	90	135	167
9	10	32	77
10	12	37	77
11	14	42	75
12	18	47	69

Application exapmle

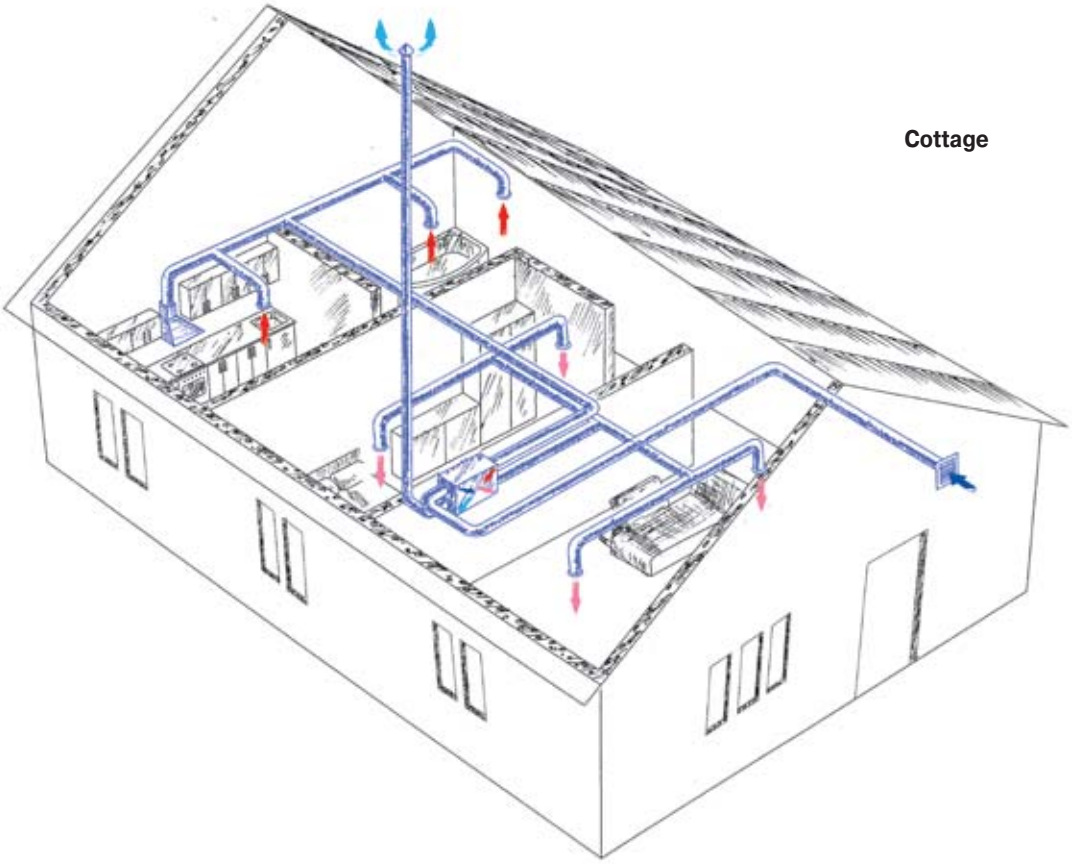

Cottage

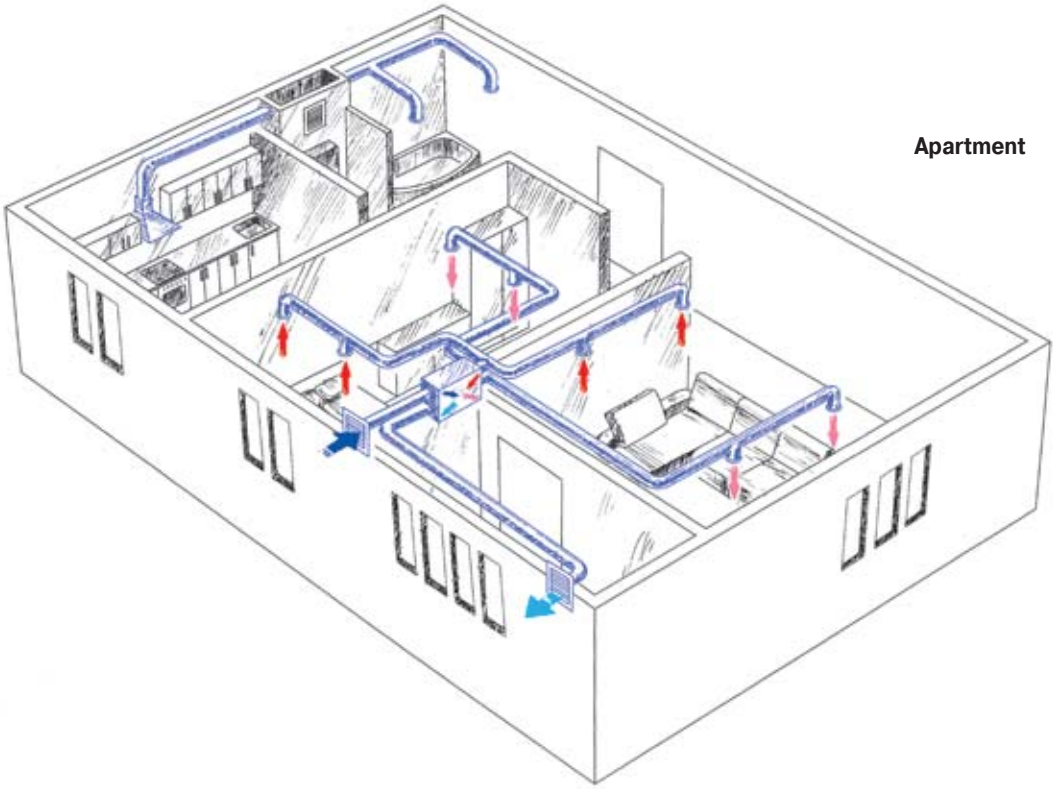

Apartment

Heat recovery air handling units

KOMFORT EC LB
KOMFORT EC LBE

Air capacity – up to 940 m³/h
Heat recovery efficiency – up to 98 %

Application

- Air handling units for efficient supply and exhaust ventilation in flats, houses, cottages and other buildings.
- For arranging of controlled energy saving ventilation systems.
- Heat recovery minimises ventilation heat losses.
- Controllable air exchange for creating the best suitable indoor microclimate.
- Compatible with round Ø160, 200 and 250 mm air ducts.

Design

- The casing is made of double-skinned aluzinc panels, internally filled with 25 mm mineral wool layer for heat and sound insulation.
- Casing has fixing brackets with vibration absorbing connectors for easy installation.
- The hinged casing panel ensures easy access to the internals for cleaning and other maintenance operations.
- The spigots for connection to the air ducts are located at the side of the unit and are rubber sealed for airtight connection to the air ducts.
- The bypass damper is opened automatically in summer time to cool down a room with cool outside air. For the model with a heater the bypass damper is also used for the heat exchanger freezing protection.

Fans

- High-efficient external rotor EC motors and centrifugal impellers are used for air supply and exhaust.
- The forward curved blades in **KOMFORT EC LB300/LB400/ LBE300/LBE400 S11** provide permanent air flow.
- The **KOMFORT EC LB600/LBE600 S11** model has impellers with backward curved blades.
- EC motors have the best power consumption to air capacity ratio and meet the latest demands concerning energy saving and high-efficient ventilation.
- EC motors are featured with high performance, low noise level and totally controllable speed range.
- Dynamically balanced impellers.

Heat recovery

- The unit is equipped with a counter-flow polystyrene heat exchanger with a large surface area and high heat recovery efficiency.
- Heat recovery is based on utilization of heat energy contained in the extract air stream for heating up of supply air stream. Extract air transfers most of its heat to the intake air flow. Heat recovery reduces heat energy losses in cold seasons.
- In summer the heat exchanger performs reverse and intake air is cooled in the heat exchanger by the cool extract air. This contributes to better performance of the air conditioner in ventilated premises.
- The drain pan under the heat exchanger block is used for condensate collection. The drain pan is fitted with a drain pipe for condensate removal.
- The electronic freeze protection system is used to prevent the heat exchanger freezing in the cold season:

• **KOMFORT EC LBE S11**: the bypass damper is opened according to the temperature sensor feedback to let supply air flow pass along the bypass air duct. Synchronously, the heat exchanger surface is warmed up with warm extract air flow. After a freezing danger is over the bypass damper is closed and the unit reverts to the normal operation mode.
• **KOMFORT EC LB S11**: in case of a freezing danger registered by the outdoor temperature sensor the supply fan is turned off to let the heat exchanger surface get warmed up with warm extract air flow. After a freezing danger is over the supply fan is turned on and the unit reverts to the standard operation mode.

Air heater

- The **KOMFORT EC LBE S11** model is equipped with an electric heater for operation during cold seasons at low outside temperature.
- The integrated electric heater is activated to warm up supply air flow if set indoor air temperature may not be reached by means of heat recovery only.
- Smooth heat output control ensures automatic supply air temperature maintaining.
- Two integrated overheat protection thermostats, one actuated at +60 °C with automatic restart and the other one actuated at +90 °C with manual restart.

Air filtration

- The built-in G4 pocket supply filter and G4 cassette extract filter provide efficient air filtration. Optionally, an F7 supply filter may be used.

Control and automation

- The units incorporate an integrated control system with a wall-mounted control panel and sensor display.
- The standard delivery set includes a 10 m cable for connection of the unit and the control panel.
- Automation functions:

• Activating/deactivating the unit.
• Setting low, medium and high speeds for the supply and extract fan as well as air flow control. Each speed is individually adjusted during set-up.
• Automatic heater activation/deactivation and smooth heat output control. Heater overheating protection. Cooling of the heater at the end of the heating cycle for **KOMFORT EC LBE S11**.
• Opening/closing the bypass damper for summer ventilation.

• Setting and maintaining room or duct air temperature.
• Timer activation/deactivation and set-up.
• Setting day- and week-scheduled operation of the unit.
• Operation control on feedback from FS1 duct humidity sensor (to be ordered separately) or from the humidity sensor in the control panel.
• Filter clogging control.
• System shutdown on signal from a fire alarm panel.
• Controlling supply and exhaust air dampers (available separately).
• Cooler control (available separately).

Mounting

❑ The unit is suitable for floor, ceiling or wall mounting using fixing brackets.
❑ The correct mounted unit must provide free condensate collection and drainage as well as good access for servicing and filter replacement.
❑ The service access is on the side of the removable service side panel, leftwards along supply air flow.

Overall dimensions

Model	Dimensions [mm]									
	ØD	B	B1	B2	B3	H	H1	H2	L	L1
KOMFORT EC LB300 S11	159	566	125	391	186	475	202	118	1081	1187
KOMFORT EC LBE300-3 S11										
KOMFORT EC LB400 S11	199	687	255	588	220	514	235	139	1092	1174
KOMFORT EC LBE400-3 S11										
KOMFORT EC LB600 S11	249	940	250	837	345	620	262	156	1200	1282
KOMFORT EC LBE600-3 S11										

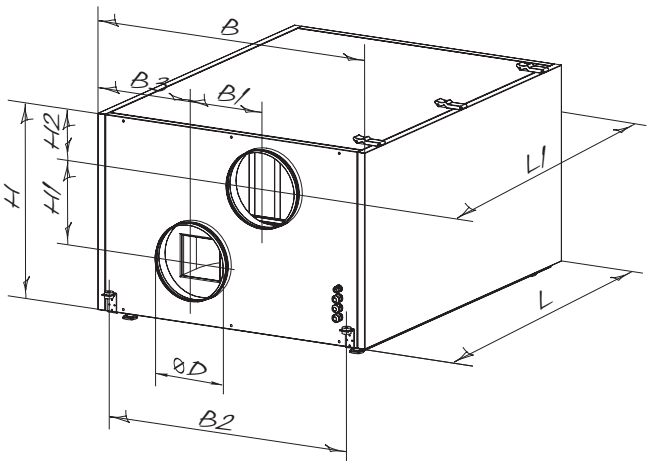

Accessories

Model	Replaceable filter G4 (pocket type)	Replaceable filter F7 (pocket type)	Replaceable filter G4 (cassette type)	Duct humidity sensor
KOMFORT EC LB300 S11	FPT-EC LB/LBE300 G4	FPT-EC LB/LBE300 F7	FP-EC LB/LBE300 G4	FS1
KOMFORT EC LBE300-3 S11				
KOMFORT EC LB400 S11	FPT-EC LB/LBE400 G4	FPT-EC LB/LBE400 F7	FP-EC LB/LBE400 G4	
KOMFORT EC LBE400-3 S11				
KOMFORT EC LB600 S11	FPT-EC LB/LBE600 G4	FPT-EC LB/LBE600 F7	FP-EC LB/LBE600 G4	
KOMFORT EC LBE600-3 S11				

Technical data

Parameters	KOMFORT EC LB300 S11	KOMFORT EC LBE300-3 S11	KOMFORT EC LB400 S11	KOMFORT EC LBE400-3 S11
Voltage [V / 50-60 Hz]	1 ~ 230			
Fan power [kW]	0.138		0.306	
Fan current [A]	0.9		2.0	
Electric heater power [kW]	-	3.0	-	3.0
Electric heater current [A]	-	13.0	-	13.0
Total unit power [kW]	0.138	3.138	0.306	3.306
Total unit current [A]	0.9	13.9	2.0	15.0
Maximum air capacity [m³/h]	300		450	
RPM	1380		2600	
Sound pressure level at 3 m distance [dB(A)]	24-45		28-47	
Transported air temperature [°C]	-25 up to +60			
Casing material	aluzinc			
Insulation	25 mm mineral wool			
Extract filter	cassette G4			
Supply filter	pocket G4 (F7)*			
Connected air duct diameter [mm]	160		200	
Weight [kg]	40	42	45	47
Heat recovery efficiency [%]**	86 up to 98		85 up to 98	
Heat exchanger type	counter-flow			
SEC Class	A+			
Heat exchanger material	polystyrene			

* Option.
** Heat recovery efficiency is specified in compliance with the EN308 EU norms.

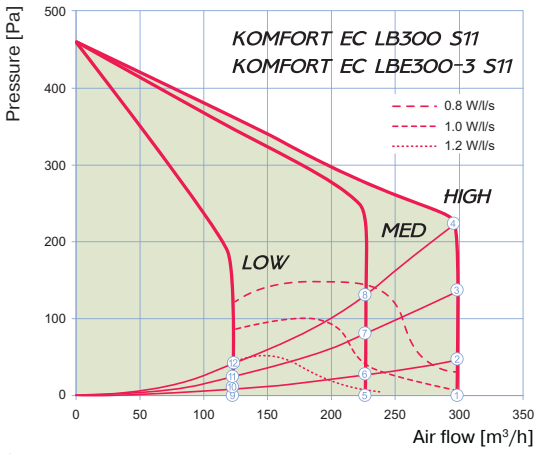

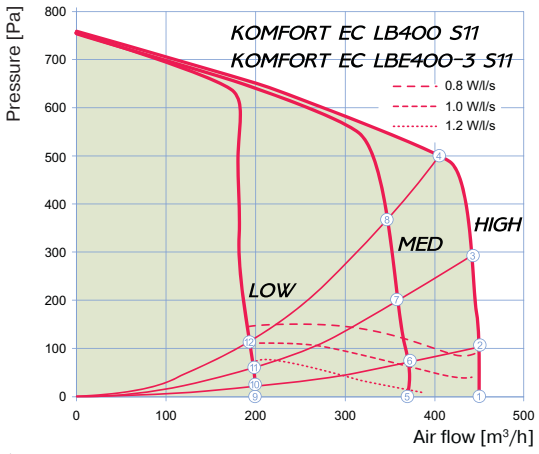

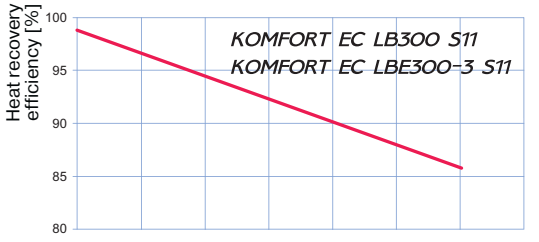

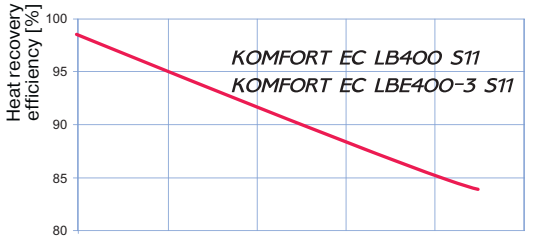

Technical data

Parameters	KOMFORT EC LB600 S11	KOMFORT EC LBE600-3 S11
Voltage [V / 50-60 Hz]	1 ~ 230	
Fan power [kW]	0.34	
Fan current [A]	2.2	
Electric heater power [kW]	-	3.0
Electric heater current [A]	-	13.0
Total unit power [kW]	0.34	3.34
Total unit current [A]	2.2	15.2
Maximum air capacity [m³/h]	940	
RPM	1740	
Sound pressure level at 3 m distance [dB(A)]	28-47	
Transported air temperature [°C]	-25 up to +60	
Casing material	aluzinc	
Insulation	25 mm mineral wool	
Extract filter	cassette G4	
Supply filter	pocket G4 (F7)*	
Connected air duct diameter [mm]	250	
Weight [kg]	77	80
Heat recovery efficiency [%]**	81 up to 98	
Heat exchanger type	counter-flow	
SEC Class	A+	
Heat exchanger material	polystyrene	

* Option.
** Heat recovery efficiency is specified in compliance with the EN308 EU norms.

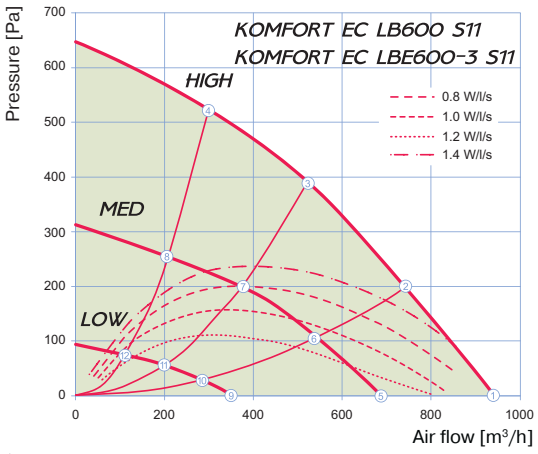

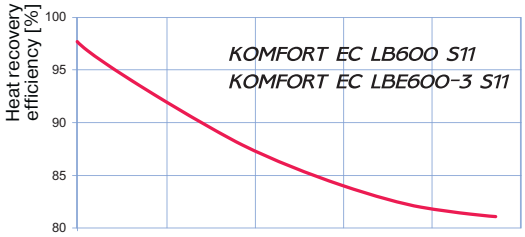

Point	Unit power with no heater [W]		
	KOMFORT EC LB300 S11	KOMFORT EC LB400 S11	KOMFORT EC LB600 S11
	KOMFORT EC LBE300-3 S11	KOMFORT EC LBE400-3 S11	KOMFORT EC LBE600-3 S11
1	83	87	87
2	96	145	145
3	124	247	247
4	134	299	299
5	45	79	79
6	48	103	103
7	60	143	143
8	73	217	217
9	20	28	28
10	22	32	32
11	25	41	41
12	27	56	56

Heat recovery air handling units

KOMFORT EC LW

Air capacity – up to 550 m³/h
Heat recovery efficiency – up to 90 %

Application

- ❑ Air handling units for efficient supply and exhaust ventilation in flats, houses, cottages and other buildings.
- ❑ For controllable mechanical energy saving ventilation systems.
- ❑ Heat recovery minimises ventilation heat losses.
- ❑ Control of air exchange for creating comfortable indoor microclimate.
- ❑ Compatible with round Ø150, 160 or 200 mm air ducts.

Design

❑ The casing is made of double-skinned aluzinc panels, internally filled with 25 mm mineral wool layer for heat and sound insulation.
❑ The casing has fixing brackets with vibration absorbing connectors for easy installation.
❑ The spigots for connection to the air ducts are located at the side of the unit and are rubber sealed for airtight connection to the air ducts.
❑ The hinged casing side panels ensure easy access to the internals for cleaning, filter replacement and other maintenance operations.

Fans

❑ High-efficient external rotor EC motors and centrifugal double-inlet impellers with forward curved blades are used for air supply and exhaust.
❑ EC motors have the best power consumption to air capacity ratio and meet the latest demands concerning energy saving and high-efficient ventilation.
❑ EC motors are featured with high performance, low noise level and totally controllable speed range.
❑ Dynamically balanced impellers.

Heat recovery

❑ The unit is equipped with a plate cross-flow polystyrene heat exchanger with a large surface area and high heat recovery efficiency.
❑ The air flows are fully separated within the heat exchanger. Odours and contaminants contained in the extract air are not transferred to the supply air flow.
❑ Heat recovery is based on the utilization of the thermal energy of the extract air for heating up supply air. Extract air transfers most of its heat to the intake air flow. Heat recovery reduces heat losses in cold seasons. In summer the heat exchanger performs reverse and intake air is cooled in the heat exchanger by the cool extract air. This contributes to better performance of the air conditioner in ventilated premises.
❑ The electronic protection system based on bypass and heater is used for freezing protection of the unit in cold seasons. The bypass damper is opened and the heater is turned on automatically according to temperature sensor readings. Cold intake air passes by the heat exchanger and is warmed up to set temperature in the heat exchanger. Synchronously extract air that passes by the heat exchanger is used for its defrosting. After a freezing danger is over the bypass damper is closed, the heater is turned off. The intake air flows again through the heat exchanger and absorbs the accumulated heat. The unit reverts to the normal operation mode.
❑ The drain pan under the heat exchanger block is used for condensate collection and drainage.

Air heater

❑ The unit is equipped with a water (glycol) heater for operation at low outside air temperature.
❑ The integrated water heater is activated to warm up supply air flow if set indoor air temperature may not be reached by means of heat recovery only.
❑ Smooth water heater power control ensures automatic supply air temperature maintaining.
❑ The air temperature sensor downstream of the waterheating coils and the return water temperature sensor are used for freezing protection of the water heater.

Air filtration

❑ The built-in F7 cassette supply filter and G4 cassette extract filter provide efficient air filtration.

Control and automation

❑ The unit incorporates an integrated control system with a wall-mounted control panel and sensor display.
❑ The standard delivery set includes a 10 m cable for connection of the unit and the control panel.
❑ Control panel functions:
- Activating/deactivating the unit.
- Setting required fan speed.
- Setting and maintaining supply air temperature.
- Setting week-scheduled operation of the unit.
- Displaying indoor air temperature.

❑ Automation functions:
- Set supply air temperature maintaining by means of the heat medium regulating valve.
- Controlling the heat exchanger bypass damper.
- Controlling the circulating pump installed on the heat medium supply pipeline to the water heater.
- Setting supply and extract fan speed.
- Filter clogging control and indication by operating hours.
- Controlling supply and exhaust air dampers (to be ordered separately).

Mounting

- Mounting to floor, ceiling or wall with fixing brackets.
- The correct mounted unit must provide condensate collecting and drainage and free access to the hinged side panels for servicing and filter replacement.

Technical data

Parameters	KOMFORT EC LW300-2	KOMFORT EC L1W300-2	KOMFORT EC LW400-2	KOMFORT EC LW550-2
Voltage [V / 50-60 Hz]	1 ~ 230			
Number of water (glycol) coil rows	2			
Power [kW]	0.14		0.35	
Current [A]	1.2		2.6	
Maximum air capacity [m^3/h]	300		400	550
RPM	1380		1340	2150
Sound pressure level at 3 m [dBA]	24-45		28-47	
Transported air temperature [°C]	-25 up to +60			
Casing material	aluzinc			
Insulation	25 mm mineral wool			
Extract filter	cassette G4			
Supply filter	cassette F7			
Connected air duct diameter [mm]	150	160	200	
Weight [kg]	40			
Heat recovery efficiency [%]*	up to 90			
Heat exchanger type	counter-flow			
SEC class	A+			A
Heat exchanger material	polystyrene			

* Heat recovery efficiency is specified in compliance with the EN308 EU norms.

Overall dimensions

Model	Dimensions [mm]										
	ØD	B	B1	B2	B3	H	H2	H3	L	L1	L2
KOMFORT EC LW300-2	149	500	403	161	249	555	127	231	1092	1137	1198
KOMFORT EC L1W300-2	159	500	403	161	249	555	127	231	1092	1137	1198
KOMFORT EC LW400-2	199	500	403	161	249	555	127	231	1092	1137	1198
KOMFORT EC LW550-2	199	500	403	161	249	555	127	231	1092	1137	1198

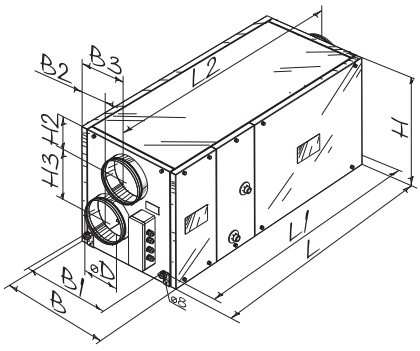

Accessories

Model	Replaceable filter G4 (cassette type)	Replaceable filter F7 (cassette type)
KOMFORT EC LW300-2	FP-EC LW300-550 G4	FP-EC LW300-550 F7
KOMFORT EC L1W300-2		
KOMFORT EC LW400-2		
KOMFORT EC LW550-2		

Technical data

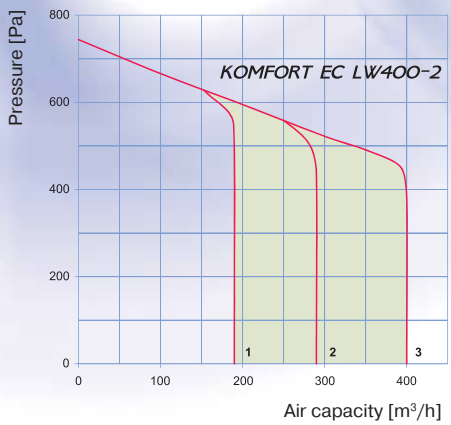

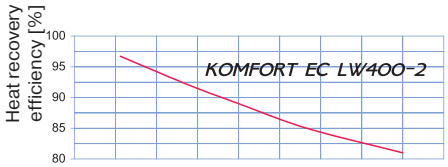

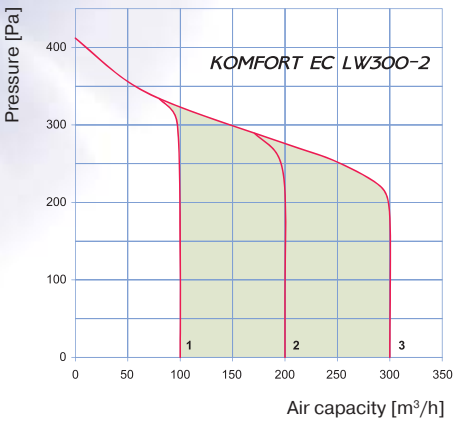

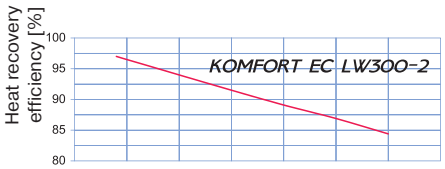

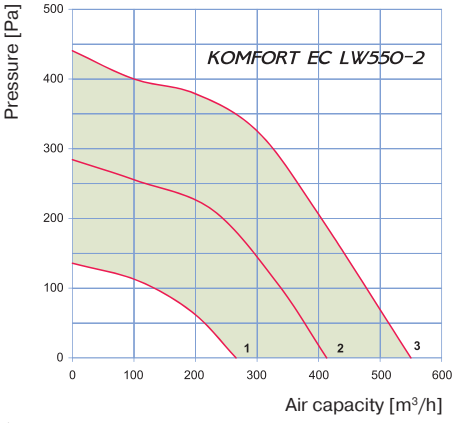

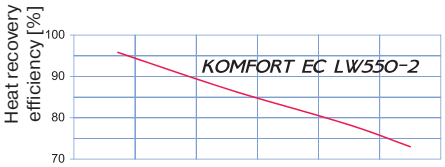

Hot water coil calculation diagram

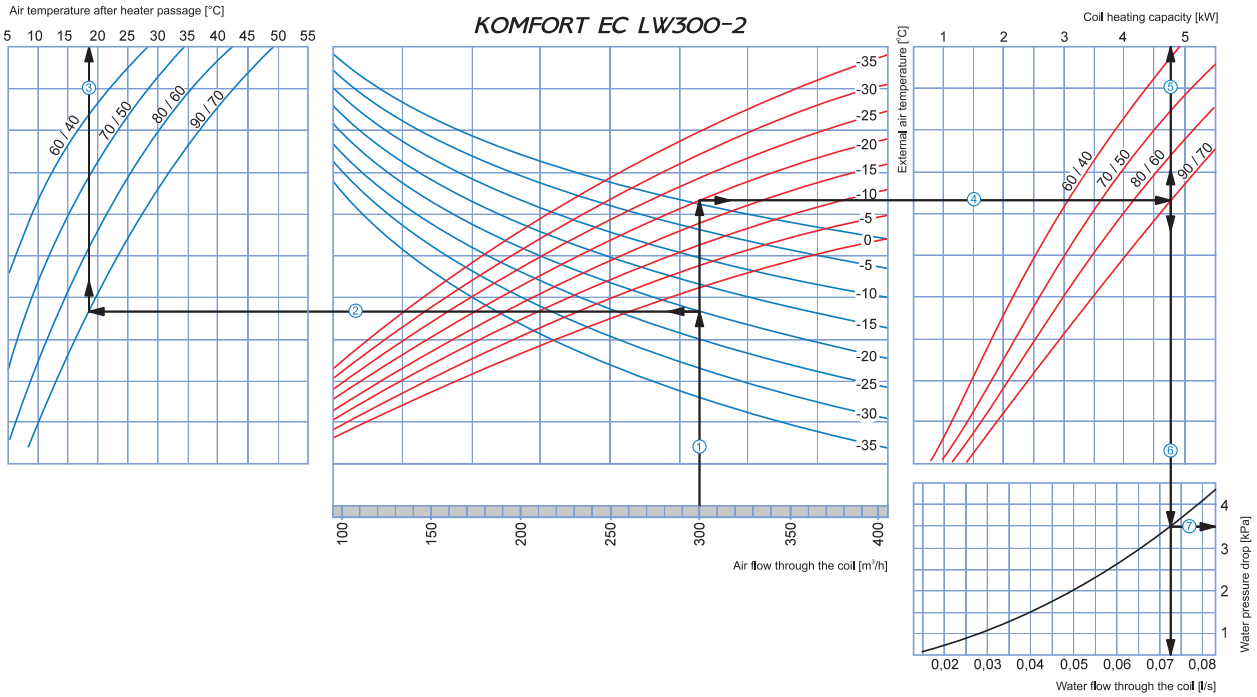

How to use water heater diagrams

Sample parameters: Air flow = 300 m³/h. Outside air temperature =-20°C. Water temperature (in/out) = 90/70 °C.

- **Supply air temperature:** prolong the line of air flow (e.g. 300 m³/h) ① up to the point where it crosses the outside air temperature (blue curve, e.g. -20°C); then draw a horizontal line ② from this point to the left until it crosses the water in/out temperature curve (e.g. 90/70 °C). From this point draw a vertical line ③ to the supply air temperature axis on top of the graphic (+18°C).
- **Heating coil capacity:** Prolong the line ① up to the point where it crosses the outside air temperature (e.g. -20°C, red curve) and draw a horizontal line ④ from this point to the right until it crosses the water in/out temperature curve (e.g., 90/70 °C). From here draw a vertical line ⑤ up to the scale representing the heating coil capacity (4.75 kW).
- **Water flow:** Prolong the line ⑤ down to the water flow axis ⑥ at the bottom of the graphic (0.072 l/s).
- **Water pressure drop:** Draw the line ⑦ from the point where the line ⑥ crosses the black curve to the pressure drop axis (3.5 kPa).

Hot water coil calculation diagram

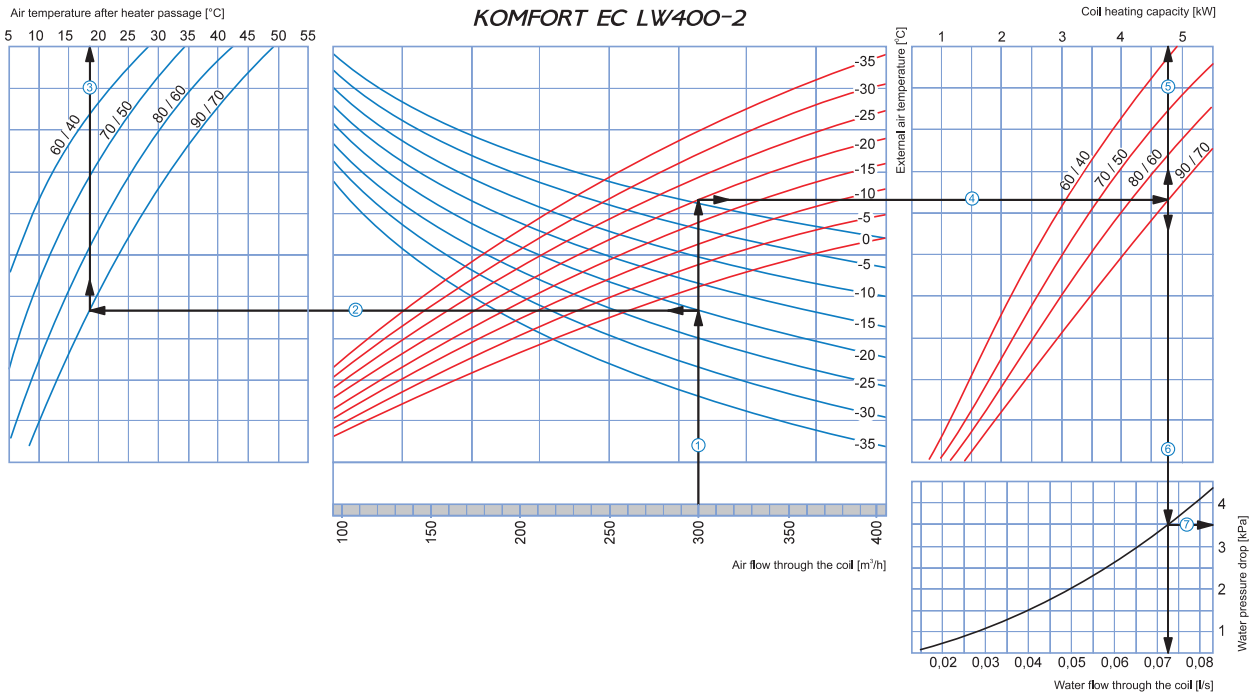

How to use water heater diagrams

Sample parameters: Air flow = 300 m³/h. Outside air temperature =-20°C. Water temperature (in/out) = 90/70 °C.

- **Supply air temperature:** prolong the line of air flow (e.g. 300 m³/h) ① up to the point where it crosses the outside air temperature (blue curve, e.g. -20°C); then draw a horizontal line ② from this point to the left until it crosses the water in/out temperature curve (e.g. 90/70 °C). From this point draw a vertical line ③ to the supply air temperature axis on top of the graphic (+18°C).
- **Heating coil capacity:** Prolong the line ① up to the point where it crosses the outside air temperature (e.g. -20°C, red curve) and draw a horizontal line ④ from this point to the right until it crosses the water in/out temperature curve (e.g., 90/70 °C). From here draw a vertical line ⑤ up to the scale representing the heating coil capacity (4.75 kW).
- **Water flow:** Prolong the line ⑤ down to the water flow axis ⑥ at the bottom of the graphic (0.072 l/s).
- **Water pressure drop:** Draw the line ⑦ from the point where the line ⑥ crosses the black curve to the pressure drop axis (3.5 kPa).

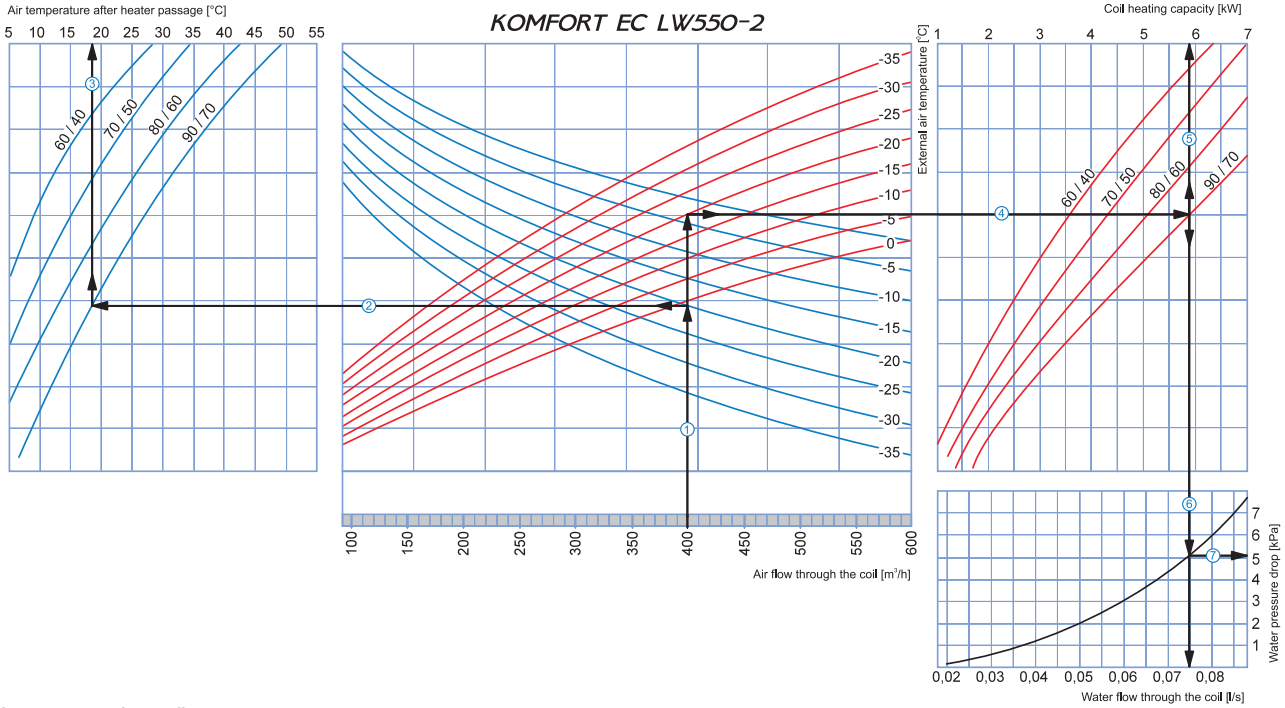

How to use water heater diagrams

Sample parameters: Air flow = 400 m³/h. Outside air temperature =-20°C. Water temperature (in/out) = 90/70 °C.

- **Supply air temperature:** prolong the line of air flow (e.g. 400 m³/h) ① up to the point where it crosses the outside air temperature (blue curve, e.g. -20°C); then draw a horizontal line ② from this point to the left until it crosses the water in/out temperature curve (e.g. 90/70 °C). From this point draw a vertical line ③ to the supply air temperature axis on top of the graphic (+18°C).
- **Heating coil capacity:** Prolong the line ① up to the point where it crosses the outside air temperature (e.g. -20°C, red curve) and draw a horizontal line ④ from this point to the right until it crosses the water in/out temperature curve (e.g., 90/70 °C). From here draw a vertical line ⑤ up to the scale representing the heating coil capacity (5.9 kW).
- **Water flow:** Prolong the line ⑤ down to the water flow axis ⑥ at the bottom of the graphic (0.075 l/s).
- **Water pressure drop:** Draw the line ⑦ from the point where the line ⑥ crosses the black curve to the pressure drop axis (5.1 kPa).

Heat recovery air handling units

KOMFORT Roto EC LE

Air capacity – up to 1500 m³/h
Heat recovery efficiency – up to 95 %

Application

- Air handling units for efficient supply and exhaust ventilation in flats, houses, cottages and other buildings.
- For arranging of controlled energy saving ventilation systems.
- Heat recovery minimises ventilation heat losses.
- Controllable air exchange for creating the best suitable indoor microclimate.
- Compatible with round Ø160, 250 and 315 mm air ducts.

Design

- The casing is made of double-skinned aluzinc panels, internally filled with up to 25 mm mineral wool layer for heat and sound insulation.
- Casing has fixing brackets with vibration absorbing connectors for easy installation.
- The spigots for connection to the air ducts are located at the side of the unit and are rubber sealed for airtight connection to the air ducts.
- The hinged casing side panels ensure easy access to the internals for cleaning, filter replacement and other maintenance operations.

Fans

- High-efficient external rotor EC motors and centrifugal impellers with backward curved blades are used for air supply and exhaust.
- EC motors have the best power consumption to air capacity ratio and meet the latest demands concerning energy saving and high-efficient ventilation.
- EC motors are featured with high performance, low noise level and totally controllable speed range.
- Dynamically balanced impellers.

Heat recovery

- The unit is equipped with an aluminium rotor heat exchanger with high heat recovery efficiency.

As compared to plate heat exchangers, the rotor heat exchangers are distinguished with higher heat recovery efficiency, ability to maintain comfortable air humidity and extremely low freezing danger that is nearly excluded in rated temperature and humidity conditions.

- Heat recovery is based on utilization of heat energy contained in the extract air stream for heating up of supply air stream. Extract air transfers most of its heat to the intake air flow. Heat recovery reduces heat energy losses in cold seasons. In summer the heat exchanger performs reverse and intake air is cooled in the heat exchanger by the cool extract air. This contributes to better performance of the air conditioner in ventilated premises.

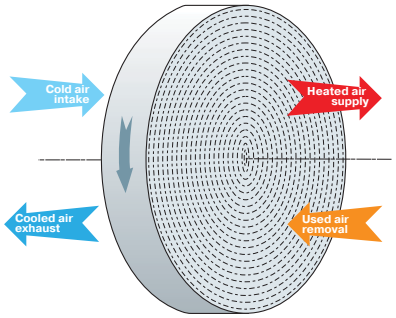

Rotor heat exchanger operating logic

Air heater

- The unit is equipped with an electric heater for operation during cold seasons at low outside temperature.
- The integrated electric heater is activated to warm up supply air flow if set indoor air temperature may not be reached by means of heat recovery only.
- Smooth heat output control ensures automatic supply air temperature maintaining.
- Two integrated overheat protection thermostats, one actuated at +60 °C with automatic restart and the other one actuated at +90 °C with manual restart.

Air filtration

- The built-in G4 pocket supply filter and G4 cassette extract filter provide efficient air filtration. Optionally, an F7 supply filter may be used.

Control and automation

- The unit incorporates an integrated control system with a wall-mounted control panel and a sensor LCD display.
- The standard delivery set includes a 10 m cable for connection of the unit and the control panel.
- Automation functions:

• Activating/deactivating the unit.

• Setting required speed for the supply and extract fan. Each speed is individually adjusted during set-up.
• Automatic heater activation/deactivation and smooth heat output control. Heater overheating protection. Cooling of the heater at the end of the heating cycle.
• Setting and maintaining room air temperature.
• Setting week-scheduled operation of the unit.
• Filter clogging control with a motor meter.
• System shutdown on signal from a fire alarm panel.
• Controlling servo-driven supply and exhaust air dampers (to be ordered separately).
• Cooler control (available separately).
• Automatic rotor activation and shutdown.

Mounting

❑ The unit is suitable for floor, ceiling or wall mounting using fixing brackets.
❑ The correct mounted unit must provide free condensate collection and drainage as well as good access for servicing and filter replacement.
❑ The service access is on service panel side, leftwards along supply air flow.

Overall dimensions

Model	Dimensions [mm]								
	ØD	A	E	F	G	L1	H	J	L
KOMFORT Roto EC LE400-2	159	1050	225	167	333	200	670	440	648
KOMFORT Roto EC LE700-3.3	249	1210	243	180	340	250	700	580	745
KOMFORT Roto EC LE1000-4.5	249	1210	243	180	340	250	700	580	745
KOMFORT Roto EC LE1200-6	314	1335	373	220	438	–	880	460	745
KOMFORT Roto EC LE1500-9	314	1430	427	275	460	–	1010	560	855

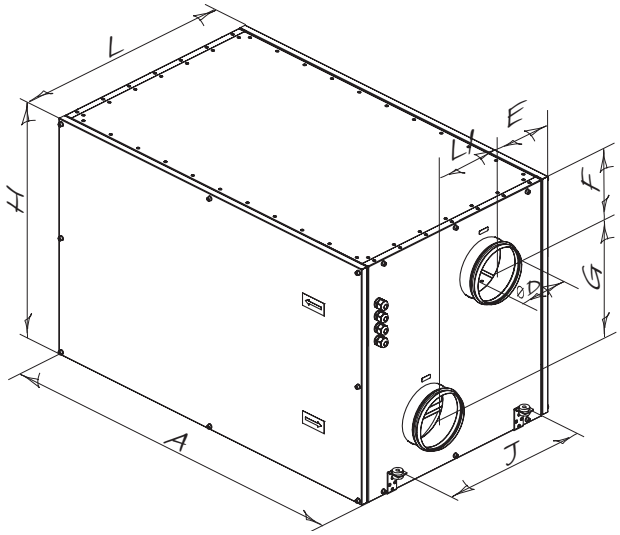

KOMFORT Roto EC LE400-2 / Roto EC LE700-3.3 / Roto EC LE1000-4.5

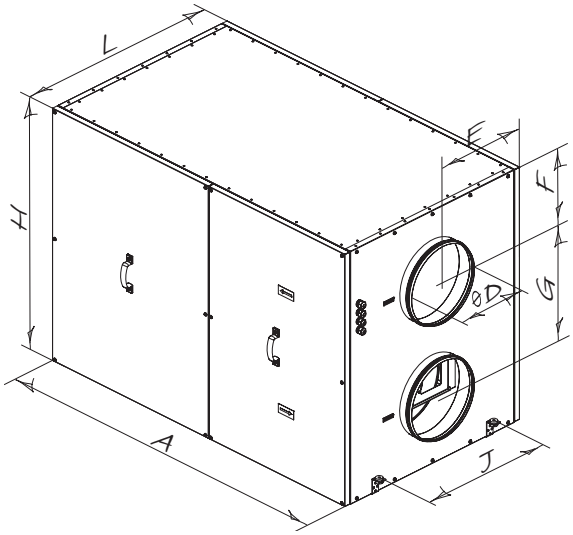

KOMFORT Roto EC LE1200-6 / Roto EC LE1500-9

Accessories

Model	Replaceable filter G4 (cassette type)	Replaceable filter G4 (pocket type)	Replaceable filter F7 (pocket type)
KOMFORT Roto EC LE400-2	FP-Roto EC LE/LW400 G4	FPT-Roto EC LE/LW400 G4	FPT-Roto EC LE/LW400 F7
KOMFORT Roto EC LE700-3.3	FP-Roto EC LE/LW700-1000 G4	FPT-Roto EC LE/LW700-1000 G4	FPT-Roto EC LE/LW700-1000 F7
KOMFORT Roto EC LE1000-4.5			
KOMFORT Roto EC LE1200-6	FP-Roto EC LE/LW1200 G4	FPT-Roto EC LE/LW1200 G4	FPT-Roto EC LE/LW1200 F7
KOMFORT Roto EC LE1500-9	FP-Roto EC LE/LW1500 G4	FPT-Roto EC LE/LW1500 G4	FPT-Roto EC LE/LW1500 F7

Technical data

Parameters	KOMFORT Roto EC LE400-2	KOMFORT Roto EC LE700-3.3	KOMFORT Roto EC LE1000-4.5	KOMFORT Roto EC LE1200-6	KOMFORT Roto EC LE1500-9
Voltage [V / 50-60 Hz]	1 ~ 230		3 ~ 380		
Fan power [kW]	0.25	0.32	0.4	0.416	0.444
Fan current [A]	0.6	0.9	1.13	4.13	4.33
Electric heater power [kW]	2	3.3	4.5	6	9
Electric heater current [A]	8.7	14.3	6.5	8.7	13.0
Total unit power [kW]	2.29	3.65	4.96	6.57	9.75
Total unit current [A]	9.9	15.9	7.2	9.5	14.1
Maximum air capacity [m^3/h]	430	700	1000	1200	1500
RPM	3060	2760	2780	1930	2000
Sound pressure level at 3 m distance [dB(A)]	45	52	58	60	62
Transported air temperature [°C]	-25 up to +60				
Casing material	aluzinc				
Insulation	20 mm mineral wool				25 mm mineral wool
Extract filter	cassette G4				
Supply filter	pocket G4 (F7)*				
Connected air duct diameter [mm]	160	250		315	
Weight [kg]	112	128	130	165	175
Heat recovery efficiency [%]**	80 up to 95	77 up to 95	72 up to 95	73 up to 95	72 up to 95
Heat exchanger type	rotor heat exchanger				
SEC class***	A			-	-
Heat exchanger material	aluminium				

* Option.
** Heat recovery efficiency is specified in compliance with the EN308 EU norms.
*** The EC norm 1254/2014 does not apply if maximum air capacity is >1000 m^3/h

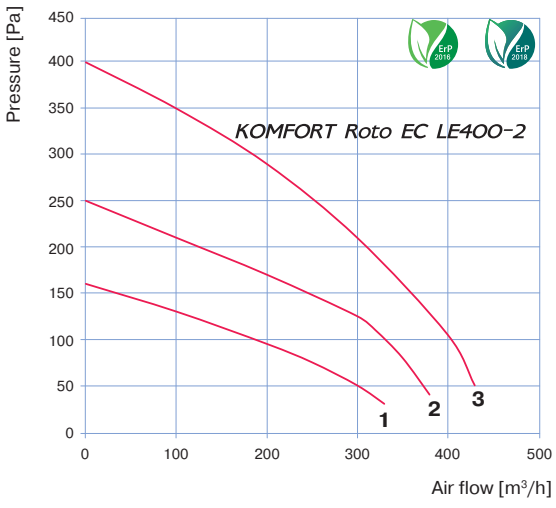

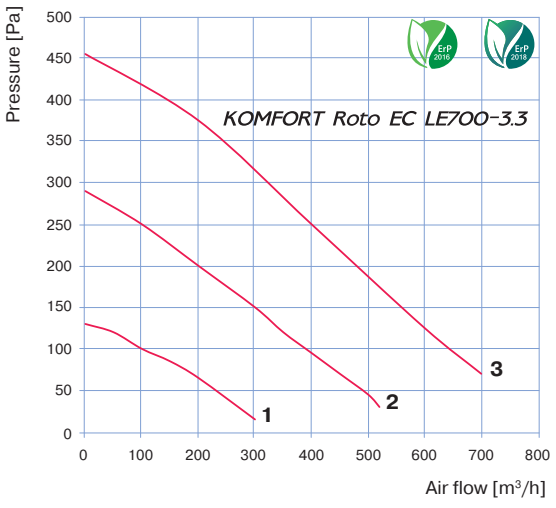

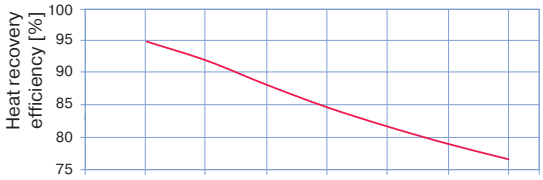

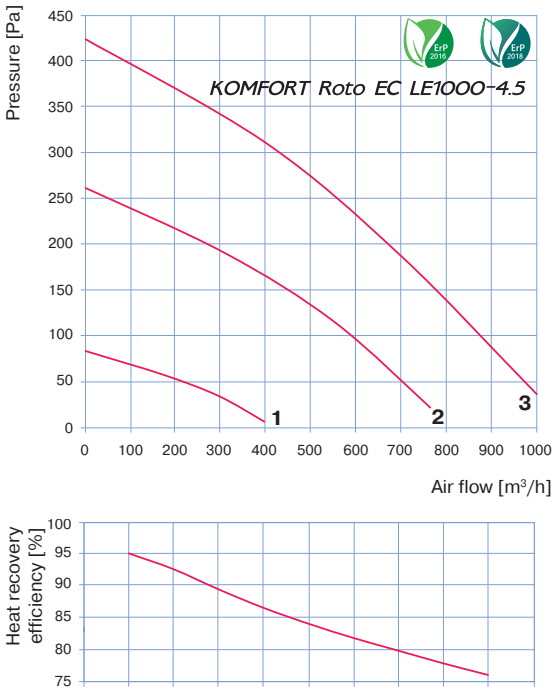
KOMFORT Roto EC LE1000-4.5
Pressure [Pa]
Air flow [m³/h]
1
2
3
Heat recovery efficiency [%]

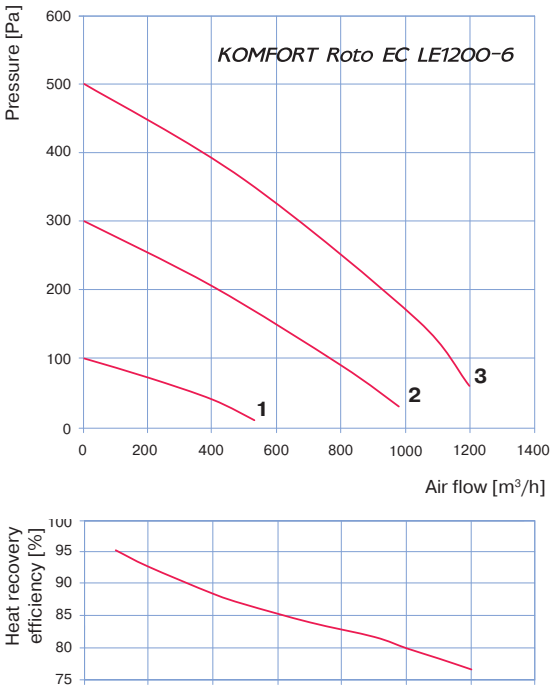
KOMFORT Roto EC LE1200-6
Pressure [Pa]
Air flow [m³/h]
1
2
3
Heat recovery efficiency [%]

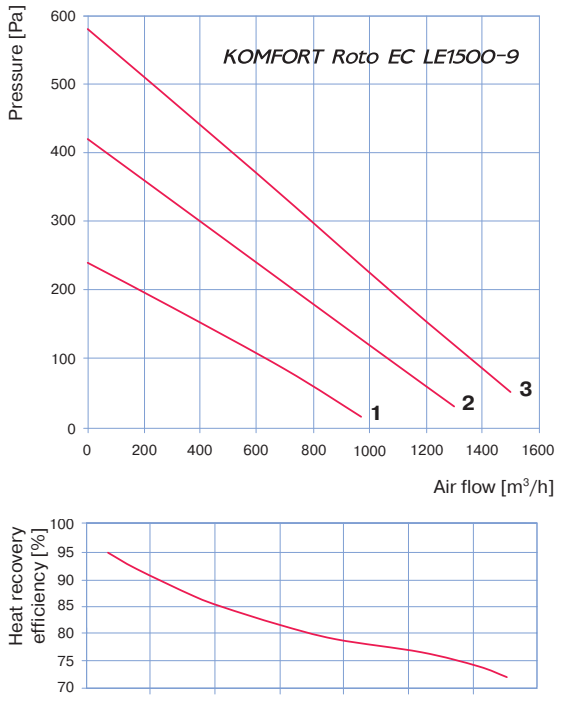
KOMFORT Roto EC LE1500-9
Pressure [Pa]
Air flow [m³/h]
1
2
3
Heat recovery efficiency [%]

Heat recovery air handling units

KOMFORT Roto EC LW

Air capacity – up to 1500 m³/h

Heat recovery efficiency – up to 95 %

Application

- Air handling units for efficient supply and exhaust ventilation in flats, houses, cottages and other buildings.
- For arranging of controlled energy saving ventilation systems.
- Heat recovery minimises ventilation heat losses.
- Controllable air exchange for creating the best suitable indoor microclimate.
- Compatible with round Ø160, 250 and 315 mm air ducts.

Design

- The casing is made of double-skinned aluzinc panels, internally filled with up to 25 mm mineral wool layer for heat and sound insulation.
- Casing has fixing brackets with vibration absorbing connectors for easy installation.
- The spigots for connection to the air ducts are located at the side of the unit and are rubber sealed for airtight connection to the air ducts.
- The hinged casing side panels ensure easy access to the internals for cleaning, filter replacement and other maintenance operations.

Fans

- High-efficient external rotor EC motors and centrifugal impellers with backward curved blades are used for air supply and exhaust.
- EC motors have the best power consumption to air capacity ratio and meet the latest demands concerning energy saving and high-efficient ventilation.
- EC motors are featured with high performance, low noise level and totally controllable speed range.
- Dynamically balanced impellers.

Heat recovery

- The unit is equipped with an aluminium rotor heat exchanger with high heat recovery efficiency.

As compared to plate heat exchangers, the rotor heat exchangers are distinguished with higher heat recovery efficiency, ability to maintain comfortable air humidity and extremely low freezing danger that is nearly excluded in rated temperature and humidity conditions.

- Heat recovery is based on utilization of heat energy contained in the extract air stream for heating up of supply air stream. Extract air transfers most of its heat to the intake air flow. Heat recovery reduces heat energy losses in cold seasons.
- In summer the heat exchanger performs reverse and intake air is cooled in the heat exchanger by the cool extract air. This contributes to better performance of the air conditioner in ventilated premises.

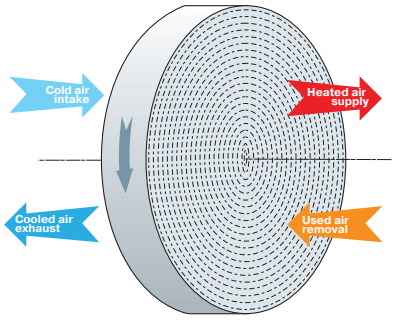

Rotor heat exchanger operating logic

Air heater

- The unit is equipped with a water (glycol) heater for operation at low outside air temperature.
- The integrated water heater is activated to warm up supply air flow if set indoor air temperature may not be reached by means of heat recovery only.
- Smooth water heater power control ensures automatic supply air temperature maintaining.
- The air temperature sensor downstream of the waterheating coils and the return water temperature sensor are used for freezing protection of the water heater.
- The water heaters are rated for maximum operating pressure 1.0 MPa (10 bar) and maximum heat medium temperature +95 °C.
- The water heater spigots are located on service side, leftwards along supply air flow.

Air filtration

- The built-in G4 pocket supply filter and G4 cassette extract filter provide efficient air filtration. Optionally, an F7 supply filter may be used.

Control and automation

❑ The unit incorporates an integrated control system with a wall-mounted control panel and a sensor LCD display.
❑ The standard delivery set includes a 10 m cable for connection of the unit and the control panel.
❑ Automation functions:
• Activating/deactivating the unit.
• Setting required speed for the supply and extract fan for the unit air flow control. Each speed is individually adjusted during set-up.
• Setting week-scheduled operation of the unit.
• Set supply air temperature maintaining by means of the heat medium regulating valve.
• Water heater freezing protection on feedback from the temperature sensor downstream of the water heating coils and the return water temperature sensor.
• Pre-heating cycle prior to the heater start and maintaining set return water temperature during the fan shutoff.
• Automatic rotor activation/deactivation.
• System shutdown on signal from a fire alarm panel.
• Controlling external servo-driven air dampers with a return spring (to be ordered separately).
• Cooler control (available separately).

Mounting

❑ The unit is suitable for floor, ceiling or wall mounting.
❑ The correct mounted unit must provide free condensate collection and drainage as well as good access for servicing and filter replacement.
❑ The service access is on service panel side, leftwards along supply air flow.

Overall dimensions

Model	Dimensions [mm]								
	ØD	A	E	F	G	L1	H	J	L
KOMFORT Roto EC LW400-2	159	1050	225	167	333	200	670	440	648
KOMFORT Roto EC LW700-2	249	1210	243	180	340	250	700	580	745
KOMFORT Roto EC LW1000-2	249	1210	243	180	340	250	700	580	745
KOMFORT Roto EC LW1200-2	314	1335	373	220	438	–	880	460	745
KOMFORT Roto EC LW1500-2	314	1430	427	275	460	–	1010	560	855

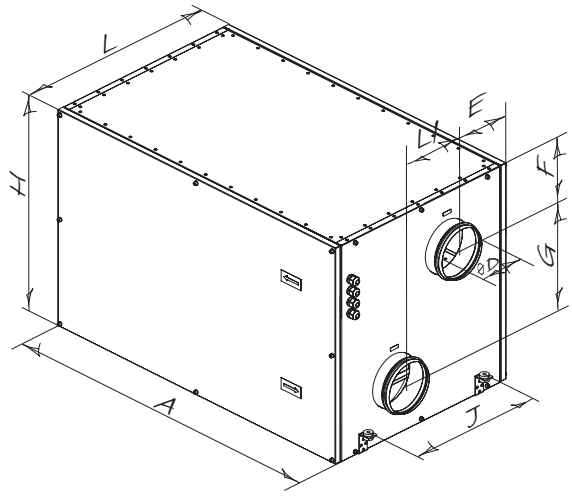

KOMFORT Roto EC LW400-2 / Roto EC LW700-2 / Roto EC LW1000-2

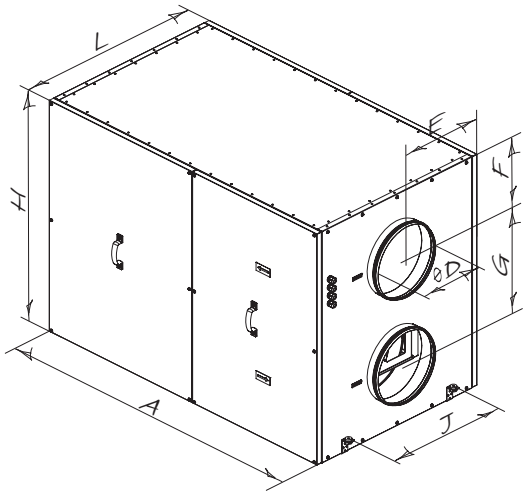

KOMFORT Roto EC LW1200-2 / Roto EC LW1500-2

Accessories

Model	Replaceable filter G4 (cassette type)	Replaceable filter G4 (pocket type)	Replaceable filter F7 (pocket type)
KOMFORT Roto EC LW400-2	FP-Roto EC LE/LW400 G4	FPT-Roto EC LE/LW400 G4	FPT-Roto EC LE/LW400 F7
KOMFORT Roto EC LW700-2	FP-Roto EC LE/LW700-1000 G4	FPT-Roto EC LE/LW700-1000 G4	FPT-Roto EC LE/LW700-1000 F7
KOMFORT Roto EC LW1000-2			
KOMFORT Roto EC LW1200-2	FP-Roto EC LE/LW1200 G4	FPT-Roto EC LE/LW1200 G4	FPT-Roto EC LE/LW1200 F7
KOMFORT Roto EC LW1500-2	FP-Roto EC LE/LW1500 G4	FPT-Roto EC LE/LW1500 G4	FPT-Roto EC LE/LW1500 F7

Technical data

Parameters	KOMFORT Roto EC LW400-2	KOMFORT Roto EC LW700-2	KOMFORT Roto EC LW1000-2	KOMFORT Roto EC LW1200-2	KOMFORT Roto EC LW1500-2
Voltage [V / 50-60 Hz]	1 ~ 230				
Number of water (glycol) coil rows	2				
Power [kW]	0.29	0.315	0.44	0.57	0.75
Current [A]	1.2	1.4	1.9	2.5	3.2
Maximum air capacity [m³/h]	430	700	1000	1200	1500
RPM	3060	2760	2780	1930	2000
Sound pressure level at 3 m [dBA]	45	52	58	60	62
Transported air temperature [°C]	-25 up to +60				
Casing material	aluzinc				
Insulation	20 mm mineral wool				25 mm mineral wool
Extract filter	cassette G4				
Supply filter	pocket G4 (F7)*				
Connected air duct diameter [mm]	160	250		315	
Weight [kg]	112	128	130	165	175
Heat recovery efficiency [%]**	80 up to 95	77 up to 95	72 up to 95	73 up to 95	72 up to 95
Heat exchanger type	rotor heat exchanger				
SEC class***	A			-	-
Heat exchanger material	aluminium				

* Option.
** Heat recovery efficiency is specified in compliance with the EN308 EU norms.
*** The EC norm 1254/2014 does not apply if maximum air capacity is >1000 m³/h

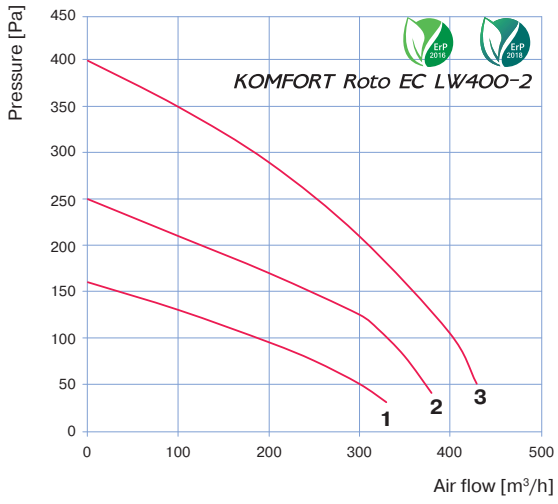

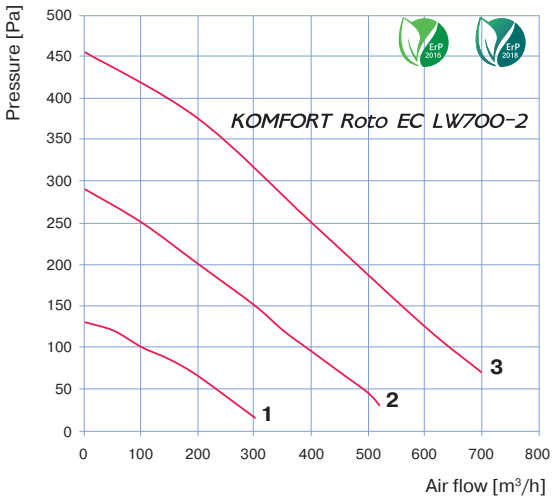

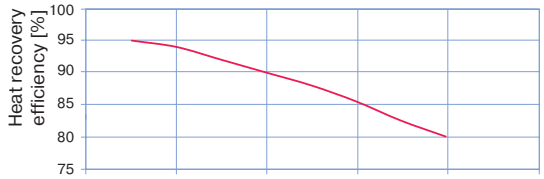

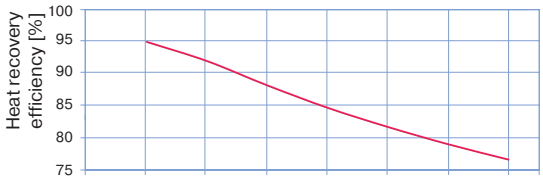

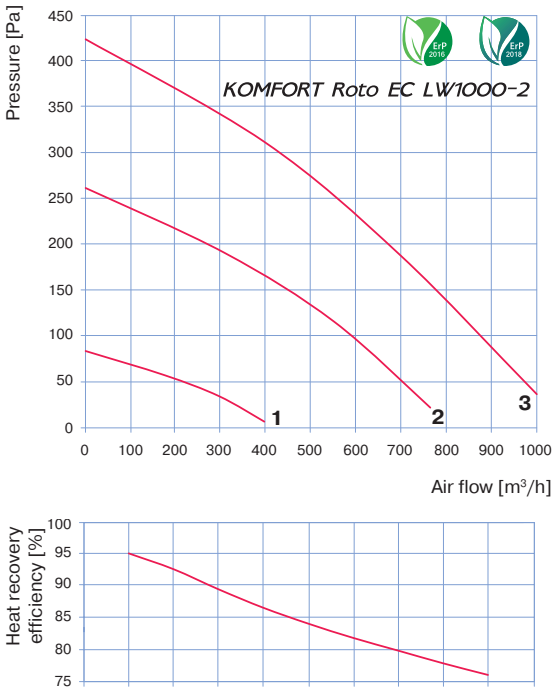
KOMFORT Roto EC LW1000-2
Pressure [Pa]
Air flow [m³/h]
1
2
3
Heat recovery efficiency [%]

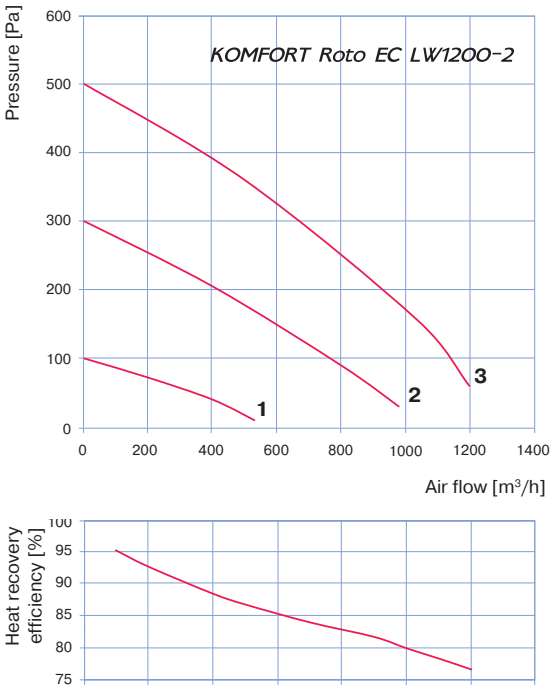
KOMFORT Roto EC LW1200-2
Pressure [Pa]
Air flow [m³/h]
1
2
3
Heat recovery efficiency [%]

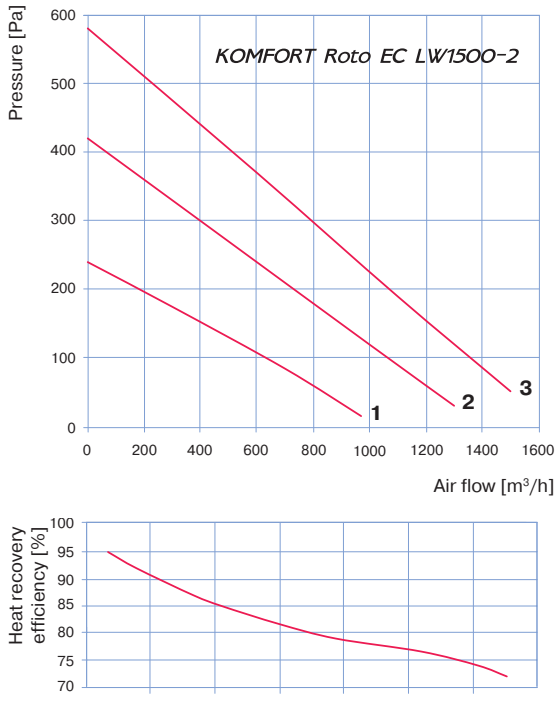
KOMFORT Roto EC LW1500-2
Pressure [Pa]
Air flow [m³/h]
1
2
3
Heat recovery efficiency [%]

Hot water coil calculation diagram

KOMFORT Roto EC LW400-2 / Roto EC LW700-2 / Roto EC LW1000-2

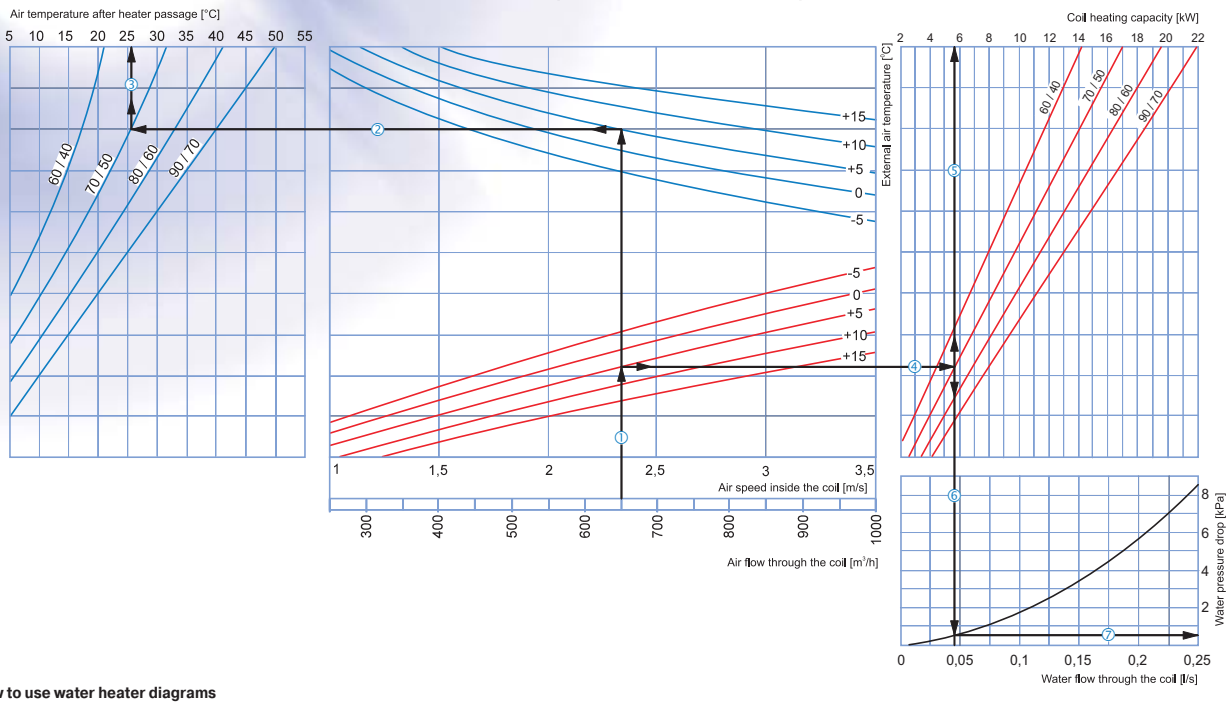

How to use water heater diagrams

Sample parameters: Air flow = 650 m³/h. Outside air temperature =+5°C. Water temperature (in/out) = 70/50 °C.

- **Air Speed inside coil:** Starting from 650 m³/h on the air flow scale draw a vertical line ①. This line crosses the air speed axis and shows a value of about 2.35 m/s.
- **Supply air temperature:** Prolong the line ① up to the point where it crosses the outside air temperature (blue curve, e.g. +5°C); then draw a horizontal line ② from this point to the left until it crosses the water in/out temperature curve (e.g. 70/50 °C). From this point draw a vertical line ③ to the supply air temperature axis on top of the graphic (+26°C).
- **Heating coil capacity:** Prolong the line ① up to the point where it crosses the outside air temperature (e.g. +5°C, red curve) and draw a horizontal line ④ from this point to the right until it crosses the water in/out temperature curve (e.g., 70/50 °C). From here draw a vertical line ⑤ up to the scale representing the heating coil capacity (5.8 kW).
- **Water flow:** Prolong the line ⑤ down to the water flow axis ⑥ at the bottom of the graphic (0.4 l/s).
- **Water pressure drop:** Draw the line ⑦ from the point where the line ⑥ crosses the black curve to the pressure drop axis (0.5 kPa).

KOMFORT Roto EC LW1200-2

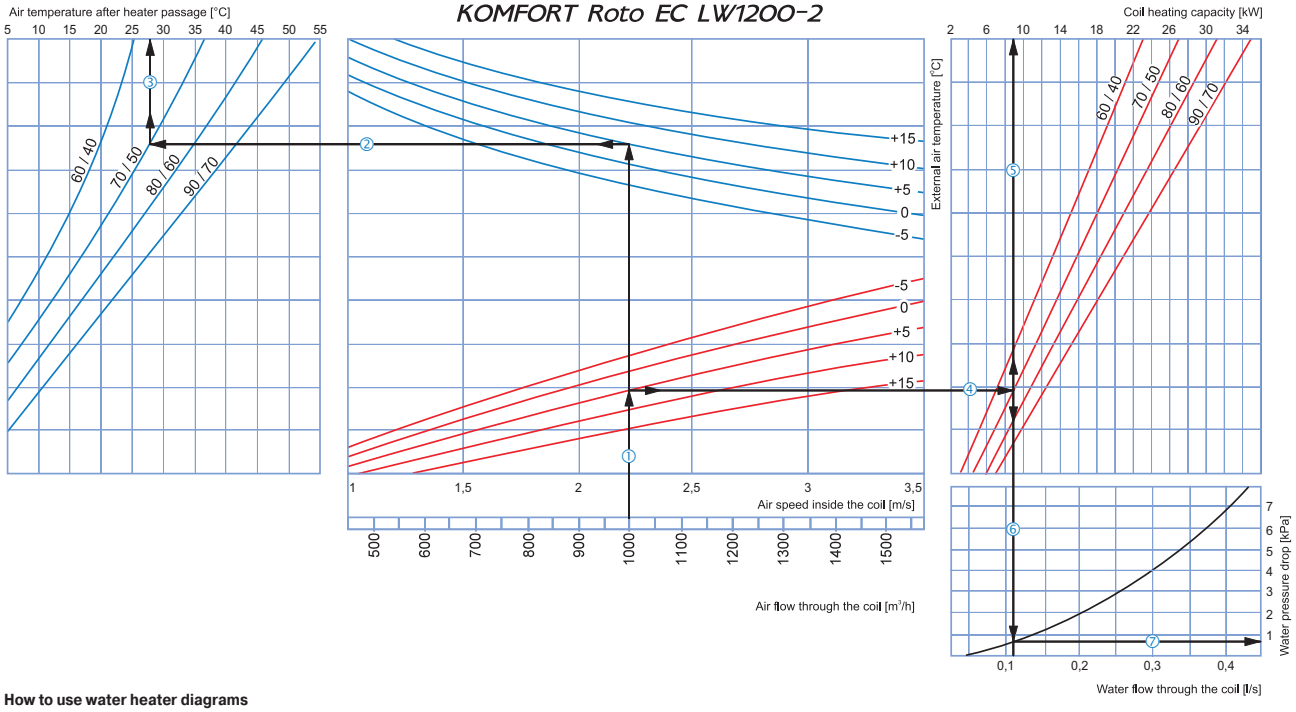

How to use water heater diagrams

Sample parameters: Air flow = 1000 m³/h. Outside air temperature =+5°C. Water temperature (in/out) = 70/50 °C.

- **Air Speed inside coil:** Starting from 1000 m³/h on the air flow scale draw a vertical line ①. This line crosses the air speed axis and shows a value of about 2.22 m/s.
- **Supply air temperature:** Prolong the line ① up to the point where it crosses the outside air temperature (blue curve, e.g. +5°C); then draw a horizontal line ② from this point to the left until it crosses the water in/out temperature curve (e.g. 70/50 °C). From this point draw a vertical line ③ to the supply air temperature axis on top of the graphic (+28°C).
- **Heating coil capacity:** Prolong the line ① up to the point where it crosses the outside air temperature (e.g. +5°C, red curve) and draw a horizontal line ④ from this point to the right until it crosses the water in/out temperature curve (e.g., 70/50 °C). From here draw a vertical line ⑤ up to the scale representing the heating coil capacity (9.0 kW).
- **Water flow:** Prolong the line ⑤ down to the water flow axis ⑥ at the bottom of the graphic (0.11 l/s).
- **Water pressure drop:** Draw the line ⑦ from the point where the line ⑥ crosses the black curve to the pressure drop axis (0.8 kPa).

Hot water coil calculation diagram

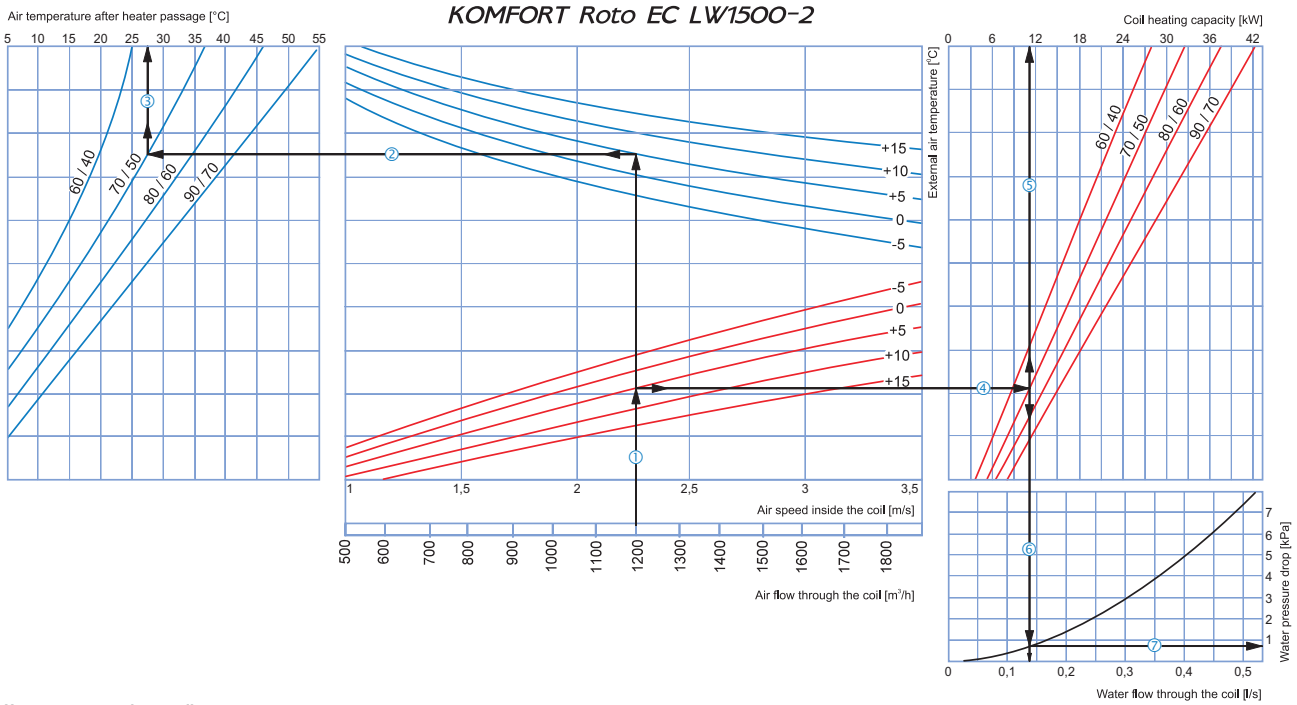

How to use water heater diagrams

Sample parameters: Air flow = 1200 m³/h. Outside air temperature =+5°C. Water temperature (in/out) = 70/50 °C.

- **Air Speed inside coil:** Starting from 1200 m³/h on the air flow scale draw a vertical line ①. This line crosses the air speed axis and shows a value of about 2.25 m/s.
- **Supply air temperature:** Prolong the line ① up to the point where it crosses the outside air temperature (blue curve, e.g. +5°C); then draw a horizontal line ② from this point to the left until it crosses the water in/out temperature curve (e.g. 70/50 °C). From this point draw a vertical line ③ to the supply air temperature axis on top of the graphic (+27°C).
- **Heating coil capacity:** Prolong the line ① up to the point where it crosses the outside air temperature (e.g. +5°C, red curve) and draw a horizontal line ④ from this point to the right until it crosses the water in/out temperature curve (e.g., 70/50 °C). From here draw a vertical line ⑤ up to the scale representing the heating coil capacity (11.0 kW).
- **Water flow:** Prolong the line ⑤ down to the water flow axis ⑥ at the bottom of the graphic (0.13 l/s).
- **Water pressure drop:** Draw the line ⑦ from the point where the line ⑥ crosses the black curve to the pressure drop axis (0.8 kPa).

Single room heat recovery air handling units

KOMFORT Ultra D105
KOMFORT Ultra D105-A

Air capacity – up to 106 m³/h
Heat recovery efficiency – up to 76 %

Application

- Air handling units for efficient supply and exhaust ventilation in flats, houses, cottages and other buildings.
- Heat recovery minimises ventilation heat losses.
- Controllable air exchange for creating the best suitable indoor microclimate.
- Compatible with round Ø125 mm air ducts.

Design

- The compact casing is made of double-skinned aluzinc panels, internally filled with 15 mm PE foam film layer for heat and sound insulation.
- The casing has mounting angles for easy installation.
- The spigots for connection to the air ducts are located at the side of the unit and are rubber sealed for airtight connection to the air ducts.
- The supply and exhaust spigots are equipped with backdraft dampers.
- The hinged side panel of the casing ensures easy access to the internals for cleaning and other maintenance operations.

Fans

- Asynchronous motors are used for air supply and exhaust.
- Centrifugal impeller with forward curved blades ensures high pressure and low noise level.
- Integrated overheating protection.
- Dynamically balanced impellers.
- Equipped with ball bearings for longer service life.

Heat exchanger

- The unit is equiped with two types of the plate cross-flow heat exchangers:

• **Aluminium** heat exchanger recovers extract air sensible energy;
• **Polymerized cellulose enthalpy** heat exchanger recovers sensible and latent energy of the extract air. These heat exchangers are frost-proof, produce no condensate and thus are recommended for operation in air conditioned premises.

- The air flows are fully separated within the heat exchanger. Odour and contaminants contained in the extract air are not transferred to the supply air flow.
- Heat recovery is based on utilization of heat energy contained in the extract air stream for heating up of supply air stream. Extract air transfers most of its heat to the intake air flow. Heat recovery reduces heat energy losses in cold seasons. In summer the heat exchanger performs reverse and intake air is cooled in the heat exchanger by the cool extract air. This contributes to better performance of the air conditioner in ventilated premises.
- The integrated electronic frost protection system in **KOMFORT Ultra D105-A** is used to prevent the heat exchanger freezing in cold seasons. In case of heat exchanger freezing danger communicated by the temperature sensor the supply fan is stopped to let warm extract air warm up the heat exchanger. After that the the supply fan is turned on and the unit reverts to the normal operation mode.

Air filtration

- Two built-in cassette filters with filtration class G4 provide efficient supply and extract air filtration.

Control and automation

- Air flow control by the external speed switch CDP-3/5.
- The units has three fan speeds:
  - 1 speed – 57 m³/h, 24 dBA;
  - 2 speed – 78 m³/h, 32 dBA;
  - 3 speed – 106 m³/h, 41 dBA.

Mounting

- Indoor installation in horizontal position.
- Mounting in a false ceiling is possible due to compact casing size.
- A small air distribution network for central ventilation may be arranged based on the unit.
- The correct mounted unit must provide free access to the hinged side panel for servicing and filter replacement.

Technical data

Parameters	KOMFORT Ultra D105		KOMFORT Ultra D105-A
Speed	I	II	III
Voltage [V / 50 Hz]	1 ~ 230		
Power [W]	30	38	56
Current [A]	0.18	0.23	0.34
Maximum air capacity [m³/h]	57	78	106
RPM	1300	1950	2500
Sound pressure level at 3 m [dBA]	24	32	41
Transported air temperature [°C]	-25 up to +50		
Casing material	aluzinc		
Insulation material	polyethylene foam		
Insulation thickness [mm]	15		
Extract / supply filter	cassette G4		
Replaceable filter*	FP-Ultra D105 G4		FP-Ultra D105-A G4
Duct connection diameter [mm]	125		
Weight [kg]	10		13
Heat recovery efficiency [%]**	65-76		64-72
Moisture recovery efficiency [%]**	up to 65		-
Heat exchanger type	cross-flow		
SEC class	D		
Heat exchanger material	polymerized cellulose		aluminum

*Replaceable filter kits are specially ordered accessories and are available on a separate order.
** Heat recovery efficiency is specified in compliance with the EN308 EU norms.

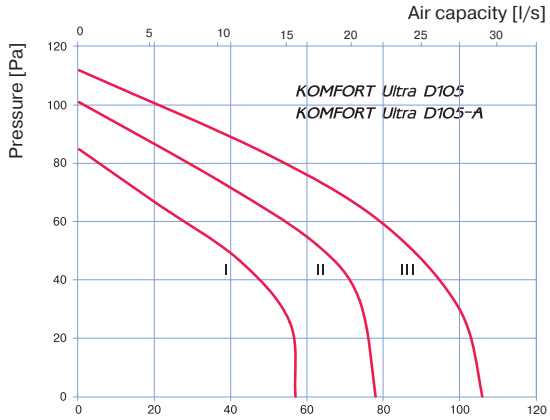

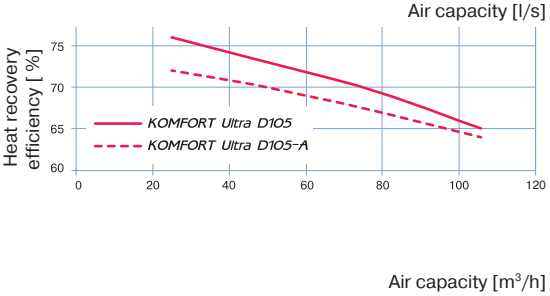

Overall dimensions

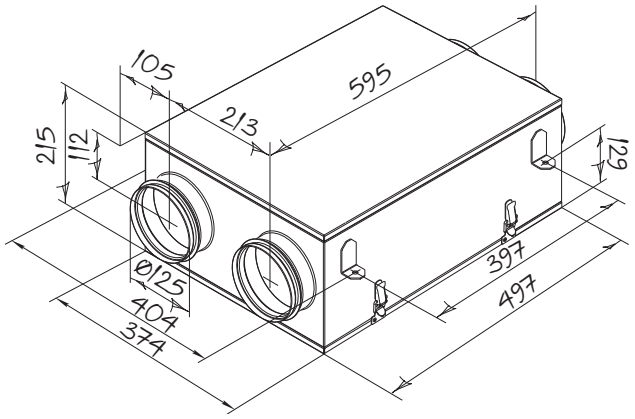

KOMFORT Ultra D105

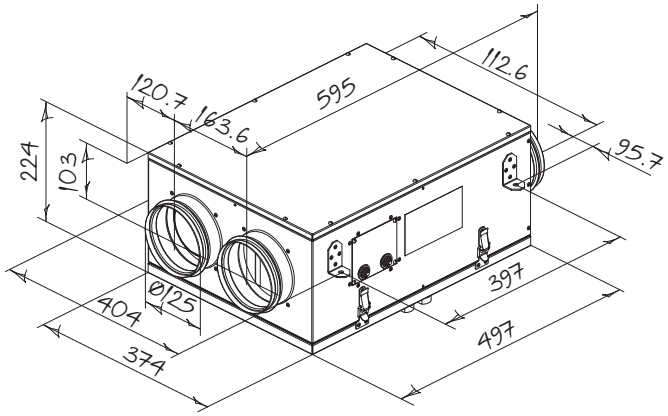

KOMFORT Ultra D105-A

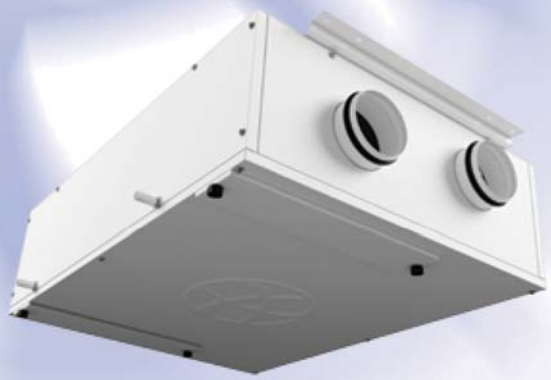

Suspended heat recovery air handling unit

KOMFORT EC DB

Air capacity – up to 410 m³/h

Heat recovery efficiency – up to 94 %

Use

- ❑ Air handling units for efficient supply and exhaust ventilation in flats, houses, cottages and other buildings.
- ❑ Heat recovery minimises ventilation heat losses.
- ❑ Controllable air exchange for creating the best suitable indoor microclimate.
- ❑ Compatible with round Ø125 and 160 mm air ducts.

Design

❑ The casing is made of double-skinned aluzinc panels, internally filled with 20 mm mineral wool layer for heat and sound insulation.

❑ The panel of the casing ensures easy access to the internals for cleaning and other maintenance operations.

❑ The spigots for connection to the air ducts are located at the sides of the unit and are rubber sealed for airtight connection to the air ducts.

Fans

❑ High-efficient external rotor EC motors and centrifugal impellers with backward curved blades are used for air supply and exhaust.

❑ EC motors have the best power consumption to air capacity ratio and meet the latest demands concerning energy saving and high-efficient ventilation.

❑ EC motors are featured with high performance, low noise level and totally controllable speed range.

❑ Dynamically balanced impellers.

Heat recovery

❑ The units are equipped with a plate counter-flow aluminium heat exchanger with a high heat recovery efficiency.

❑ Heat recovery is based on utilization of heat energy contained in the extract air stream for heating up the supply air stream. Extract air transfers most of its heat to the intake air flow. Heat recovery reduces heat energy losses in cold seasons. In summer the heat exchanger performs reverse and transfers a part of the accumulated coolness from the cooled extract air for warming up the intake air. This contributes to better performance of air conditioners in ventilated premises.

❑ The drain pan under the heat exchanger block is used for condensate collection and drainage. The drain pan is fitted with drain pipes for condensate removal.

❑ The electronic freeze protection system is used to prevent the heat exchanger freezing in cold seasons. In case of a freezing danger registered by the temperature sensor the supply fan turns off to let the heat exchanger surface get warmed up with warm extract air flow. After a freezing danger is over the supply fan in turned on and the unit reverts to the standard operation mode.

Bypass

❑ The units are equipped with the 100 % bypass for summer ventilation (room cooling by the cool intake air).

Air filtration

❑ Two built-in G4 cassette filters provide efficient supply and extract air filtration.

❑ The replacable F7 supply air filter is an additional option.

Control and automation

❑ **KOMFORT EC DB S11** units incorporate an integrated control system with the S11 wall-mounted control panel with an LCD display.

❑ **KOMFORT EC DB S15** units incorporate an integrated control system with the S15 wall-mounted control panel with a LED indication. The units are equipped with the Type B USB Connector for advanced options setting in a special software.

❑ The standard delivery set includes a 10 m cable for connection of the unit and the control panel.

❑ <u>S11 automation functions:</u>

- Activating / deactivating the unit.
- Setting required supply and extract fan speed for the unit air flow control. Each speed is individually adjusted during set-up.
- Bypass damper opening / closing for summer ventilation.
- Setting and maintaining room or duct air temperature.
- Timer turning on/off and timer operation adjustment.
- Setting day- and week-scheduled operation of the unit.
- Operation control on feedback from **FS1** duct humidity sensor (to be ordered separately) or from the humidity sensor in the control panel.
- Filter clogging indication by motor meter.
- System shutdown on signal from a fire alarm panel.
- Controlling supply and exhaust air dampers (to be ordered separately).
- Alarm indication with an error code indication.
- Cooler control (to be ordered separately).

❑ <u>S15 automation functions:</u>

- Activating / deactivating the unit.
- Air capacity control (selecting low, medium or high speed).
- Bypass damper opening / closing for summer ventilation.
- Alarm indication.
- Filter maintenance indication.

❑ <u>Extra functions of the S15 automation with the installed software:</u>

- Fan speed adjustment from 0 to 100 %. Each speed is individually adjusted for the supply and the exhaust fans.
- Operation control on feedback from **FS2** duct humidity sensor (to be ordered separately).
- Unit operation setting according to external control unit (to be ordered separately).

- Temperature setting for freeze protection system activation.
- Control and operation adjustment of the filter maintenance timer.
- Error code indication.
- External control unit, bypass and humidity level control.
- Software version upgrading.

Mounting

❑ The units are designed for ceiling or wall mounting, with the spigots upwards.

❑ The mounting place must provide enough space for connection to drain system and condensate drainage using the KIT SFK 20x32 kit (to be ordered separately).

Overall dimensions

Model	Dimensions, mm			
	ØD	B	H	L
KOMFORT EC DB160	125	754	340	1004
KOMFORT EC DB350	160	1044	340	1135

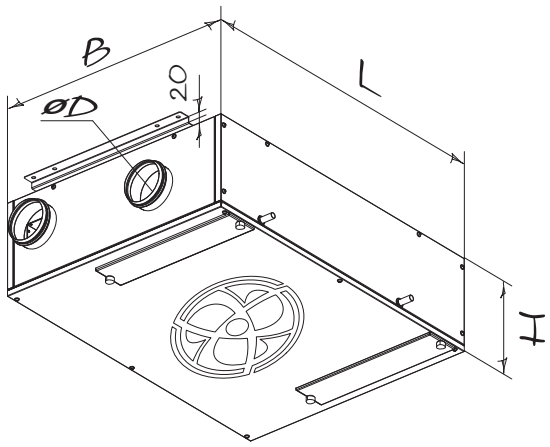

Accessories

Model	Replaceable filter G4 (cassette)	Replaceable filter F7 (cassette)	Duct humidity sensor	Condensate drainage kit
KOMFORT EC DB160 S11	FP-EC DB160 G4	FP-EC DB160 F7	FS1	KIT SFK 20x32
KOMFORT EC DB350 S11	FP-EC DB350 G4	FP-EC DB350 F7		
KOMFORT EC DB160 S15	FP-EC DB160 G4	FP-EC DB160 F7	FS2	
KOMFORT EC DB350 S15	FP-EC DB350 G4	FP-EC DB350 F7		

Technical data

Parameters	KOMFORT EC DB160	KOMFORT EC DB350
Voltage [V / 50-60 Hz]	1 ~ 230	
Unit power [W]	50	170
Unit current [A]	0.4	1.3
Maximum air capacity [m³/h]	190	410
RPM	3770	3200
Sound pressure level at 3 m [dBA]	48	58
Transported air temperature [°C]	-25 up to +60	
Casing material	aluzinc	
Insulation	40 mm mineral wool	
Extract filter	cassette G4	
Supply filter	cassette G4 / F7*	
Connected air duct diameter [mm]	125	160
Weight [kg]	52	74
Heat recovery efficiency [%]**	82 up to 94	80 up to 91
Heat exchanger type	counter-flow	
SEC class	A+	A
Heat exchanger material	aluminum	

*Option

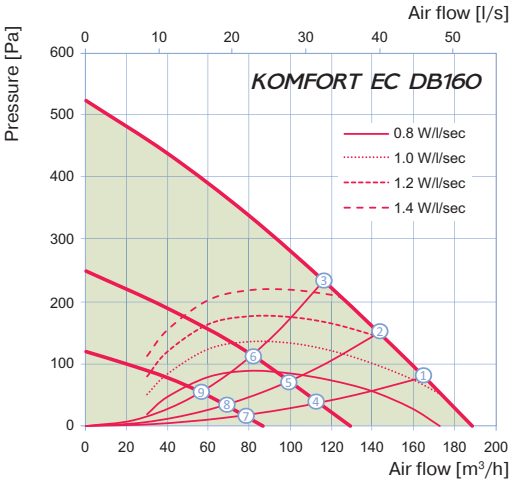

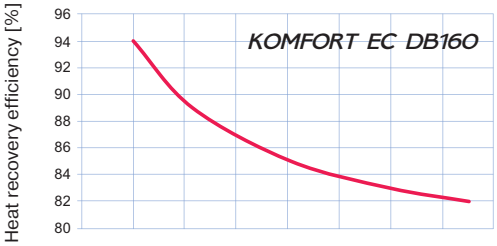

Point	Power [W]	Sound pressure level at 3 m [dBA]	Sound pressure level at 1 m [dBA]
	KOMFORT EC DB160		
1	49	26	36
2	49	26	36
3	48	25	35
4	21	22	32
5	21	22	32
6	20	21	31
7	8	19	29
8	8	18	28
9	8	18	28

Sound pressure level, A – weighted		Octave-frequency band [Hz]									LpA, 3 m dBA	LpA, 1 m dBA
	Hz	Gen.	63	125	250	500	1000	2000	4000	8000		
LwA to supply inlet	dBA	53	32	45	50	45	38	34	36	29	32	42
LwA to supply outlet	dBA	61	36	51	60	52	38	39	41	33	40	50
LwA to exhaust inlet	dBA	53	33	45	50	45	38	34	35	31	32	42
LwA to exhaust outlet	dBA	61	37	51	59	54	41	40	41	33	40	50
LwA to environmet	dBA	47	29	41	44	37	34	28	27	23	26	36

*Data provided for point 1 of the air flow diagram

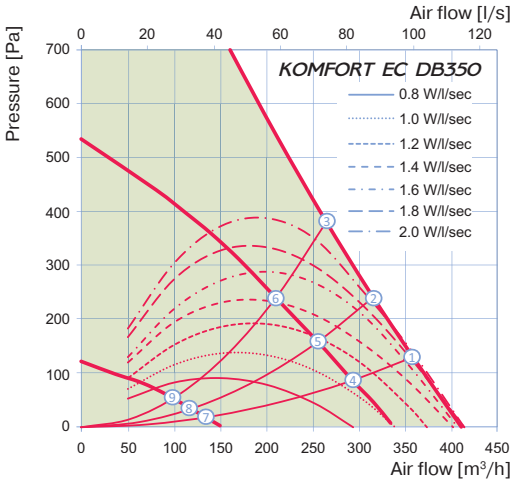

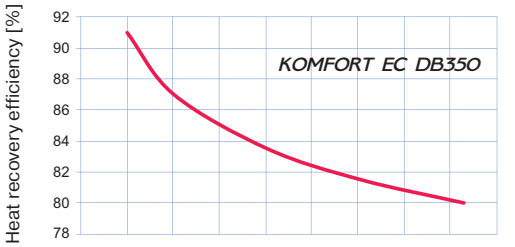

Sound pressure level, A – weighted		Octave-frequency band [Hz]									LpA, 3 m dBA	LpA, 1 m dBA
	Hz	Gen.	63	125	250	500	1000	2000	4000	8000		
LwA to supply inlet	dBA	60	46	54	58	50	46	40	40	31	40	50
LwA to supply outlet	dBA	63	52	58	60	54	46	40	41	35	43	53
LwA to exhaust inlet	dBA	61	47	54	58	50	47	41	41	32	40	50
LwA to exhaust outlet	dBA	63	51	58	59	56	46	40	41	35	43	53
LwA to environmet	dBA	55	44	51	51	43	38	32	28	24	34	44

*Data provided for point 1 of the air flow diagram

Point	Power [W]	Sound pressure level at 3 m [dBA]	Sound pressure level at 1 m [dBA]
	KOMFORT EC DB350		
1	169	34	44
2	169	34	44
3	169	33	43
4	87	28	38
5	86	28	38
6	84	27	37
7	20	22	32
8	19	22	32
9	19	21	31

Suspended heat recovery air handling units

KOMFORT EC DE

Air capacity – up to 4000 m³/h
Heat recovery efficiency – up to 90 %

Application

- Air handling units for efficient supply and exhaust ventilation in flats, houses, cottages and other buildings.
- For controllable mechanical energy saving ventilation systems.
- Heat recovery minimises ventilation heat losses.
- Control of air exchange for creating comfortable indoor microclimate.
- Compatible with round Ø160 to 400 mm air ducts.

Design

- The casing is made of double-skinned aluzinc panels, internally filled with 20 or 25 mm mineral wool layer for heat and sound insulation.
- The casing has fixing brackets with vibration absorbing connectors for easy installation.
- The spigots for connection to the air ducts are located at the side of the unit and are rubber sealed for airtight connection to the air ducts.
- The service panel ensures easy access to the internals for cleaning, filter replacement and other maintenance operations.

Fans

- High-efficient external rotor EC motors and centrifugal impellers with backward curved blades are used for air supply and exhaust.
- EC motors have the best power consumption to air capacity ratio and meet the latest demands concerning energy saving and high-efficient ventilation.
- EC motors are featured with high performance, low noise level and totally controllable speed range.
- Dynamically balanced impellers.

Heat recovery

- The **KOMFORT EC DE400/700/1100** models are equipped with a high-efficient counter-flow aluminium heat exchangers with a large surface area.
- The **KOMFORT EC DE2000/4000** models are equipped with a high-efficient plate cross-flow aluminium heat exchangers with a large surface area.
- The air flows are fully separated within the heat exchanger. Odours and contaminants contained in the extract air are not transferred to the supply air flow.
- Heat recovery is based on utilization of heat energy contained in the extract air stream for heating up of supply air stream. Extract air transfers most of its heat to the intake air flow. Heat recovery reduces heat energy losses in cold seasons. In summer the heat exchanger performs reverse and intake air is cooled in the heat exchanger by the cool extract air. This contributes to better performance of the air conditioner in ventilated premises.
- The electronic frost protection system based on bypass and heater is used to prevent the heat exchanger freezing in cold seasons. The bypass damper is opened and the heater is turned on automatically according to temperature sensor readings. Cold intake air passes by the heat exchanger and is warmed up to set temperature in the heat exchanger. Synchronously extract air that passes by the heat exchanger is used for its defrosting. After a freezing danger is over the bypass damper is closed, the heater is turned off. The unit reverts to the normal operation mode.
- The drain pan under the heat exchanger block is used for condensate collection and drainage.

Air heater

- The unit is equipped with an electric heater for operation during cold seasons at low outside temperature.
- The integrated electric heater is activated to warm up supply air flow if set indoor air temperature may not be reached by means of heat recovery only.
- Smooth heat output control ensures automatic supply air temperature maintaining.
- Two integrated overheat protection thermostats, one actuated at +60 °C with automatic restart and the other one actuated at +90 °C with manual restart.

Air filtration

- **KOMFORT EC DE400/700/1100:** the built-in G4 (optionally F7) pocket supply filter and G4 cassette extract filter provide efficient air filtration.
- **KOMFORT EC DE2000/4000:** the built-in G4 supply and extract cassette filters provide efficient air filtration.

Control and automation

❑ The unit incorporates an integrated control system with a wall-mounted control panel and a sensor display.
❑ The standard delivery set includes a 10 m cable for connection of the unit and the control panel.
❑ Automation functions:
• Activating/deactivating the unit.
• Setting required speed for the supply and extract fan for the unit air flow control. Each speed is individually adjusted during set-up.
• Automatic heater activation/deactivation and smooth heat output control. Heater overheating protection. Cooling of the heater at the end of the heating cycle.
• Opening/closing the bypass damper for summer ventilation.
• Setting and maintaining room or duct air temperature.
• Timer activation/deactivation and set-up.
• Setting day- and week-scheduled operation of the unit.
• Operation control on feedback from **FS1** duct humidity sensor (available separately) or on the humidity sensor in the control panel.
• Filter clogging control.
• System shutdown on signal from the fire alarm panel.
• Controlling supply and exhaust air dampers (to be ordered separately).
• Cooler control (available separately).

Mounting

❑ Ceiling mounting with fixing brackets.
❑ The correct mounted unit must provide free condensate collection and drainage as well as good access for servicing and filter replacement.
❑ Access for maintenance:
• **KOMFORT EC DE400 / 700 / 1100:** on the right or left side panel.
• **KOMFORT EC DE2000 / 4000:** on the bottom.

Overall dimensions

Model	Dimensions [mm]											Figure №
	ØD	B	B1	B2	B3	B4	H	H1	L	L1	L2	
KOMFORT EC DE400-1.5	160	485	415	596	132.5	220	285	130	1238	1286	925	1
KOMFORT EC DE700-2	199	827	711	–	294	345	283	120	1238	1286	–	2
KOMFORT EC DE1100-3.3	249	1350	1215	607.5	430	655	317	143	1346	1395	–	2
KOMFORT EC DE2000-12	314	1050	915	457.5	247	575	750	375	1360	1408	–	3
KOMFORT EC DE4000-21	399	1265	1130	565	297	632.5	830	415	1595	1643	–	3

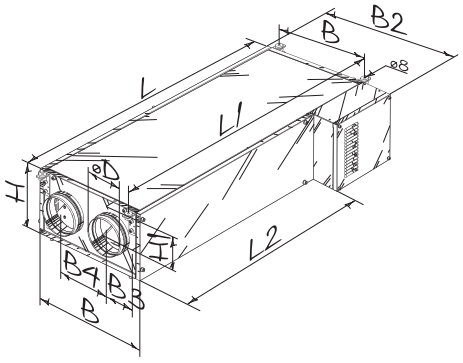

Fig. 1

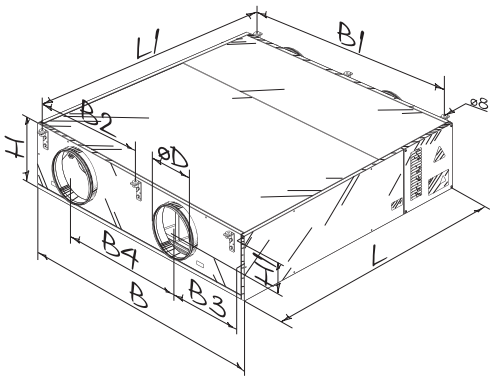

Fig. 2

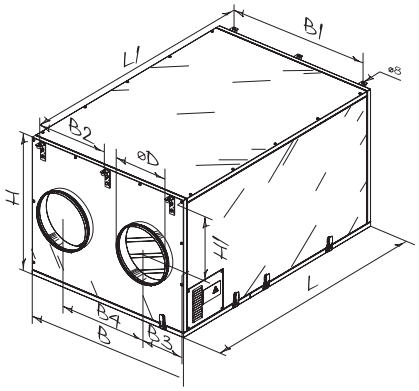

Fig. 3

Accessories

Model	Replaceable filter G4 (pocket)	Replaceable filter F7 (pocket)	Replaceable filter G4 (cassette)	Replaceable filter G4 (cassette)	Duct humidity sensor
KOMFORT EC DE400-1.5	FPT-EC DE400 G4	FPT-EC DE400 F7	-	FP-EC DE400 G4	FS1
KOMFORT EC DE700-2	FPT-EC DE700 G4	FPT-EC DE700 F7	-	FP-EC DE700 G4	
KOMFORT EC DE1100-3.3	FPT-EC DE1100 G4	FPT-EC DE1100 F7	-	FP-EC DE1100 G4	
KOMFORT EC DE2000-12	-		FP-EC DE2000 G4		
KOMFORT EC DE4000-21	-		FP-EC DE4000 G4		

Technical data

Parameters	KOMFORT EC DE400-1.5	KOMFORT EC DE700-2	KOMFORT EC DE1100-3.3	KOMFORT EC DE2000-12	KOMFORT EC DE4000-21
Voltage [V / 50-60 Hz]	1 ~ 230			3 ~ 400	
Fan power [kW]	0.2	0.27	0.4	0.84	1.98
Fan current [A]	1.62	1.6	2.26	5	3.4
Electric heater power [kW]	1.5	2.0	3.3	12.0	21.0
Electric heater current [A]	6.5	8.7	14.3	17.4	30.0
Total unit power [kW]	1.7	2.27	3.7	12.84	23.0
Total unit current [A]	8.12	10.3	16.56	22.4	33.4
Maximum air capacity [m³/h]	400	700	1100	2000	4000
RPM	3560	3060	2780	2920	2580
Sound pressure level at 3 m [dBA]	48	53	52	58	59
Transported air temperature [°C]	-25 up to +40	-25 up to +60		-25 up to +40	-25 up to +50
Casing material	aluzinc				
Insulation	20 mm mineral wool			25 mm mineral wool	
Extract filter	cassette G4				
Supply filter	pocket G4 (F7)*			cassette G4	
Connected air duct diameter [mm]	160	200	250	315	400
Weight [kg]	67	75	95	190	290
Heat recovery efficiency [%]**	up to 90			up to 75	
Heat exchanger type	counter-flow			cross-flow	
SEC class***	A		-	-	-
Heat exchanger material	aluminum				

* Option.
** Heat recovery efficiency is specified in compliance with the EN308 EU norms.

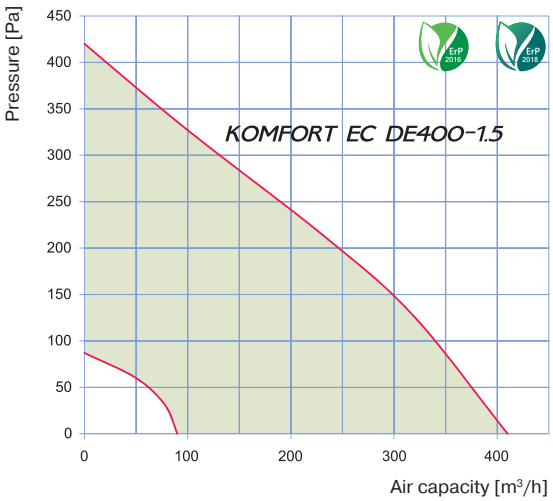

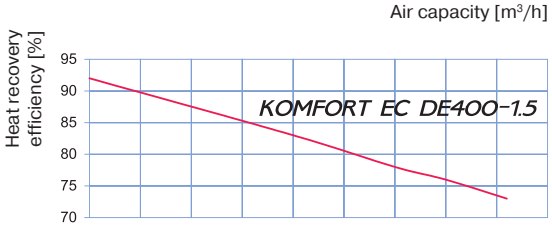

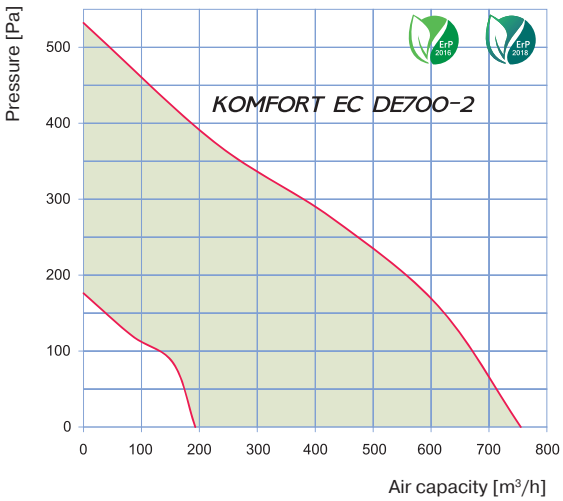

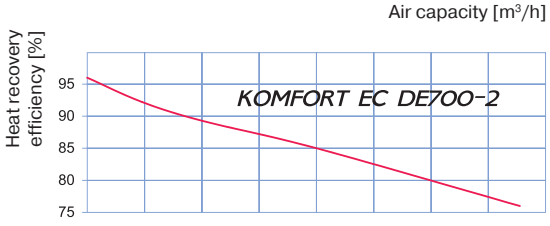

Technical data

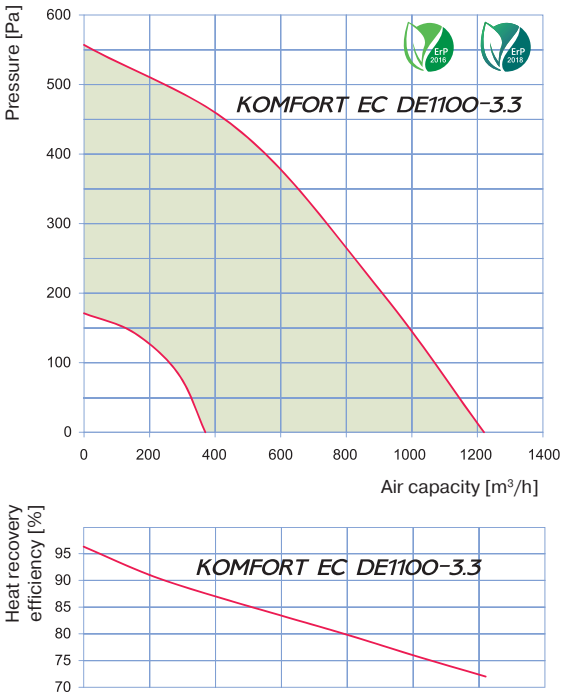

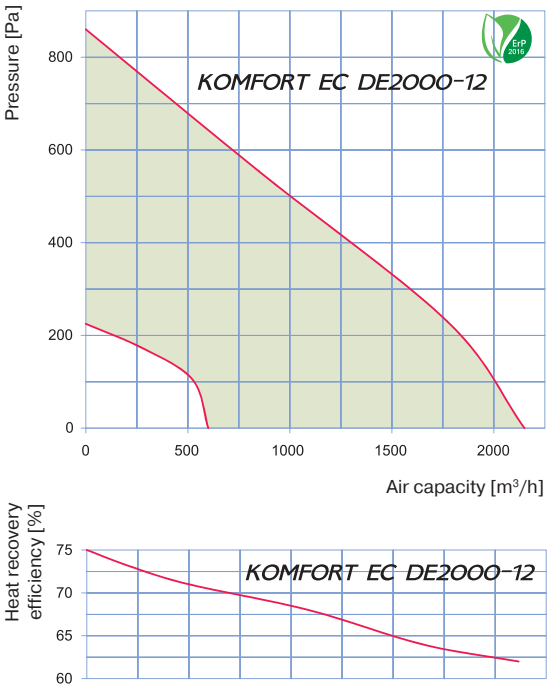

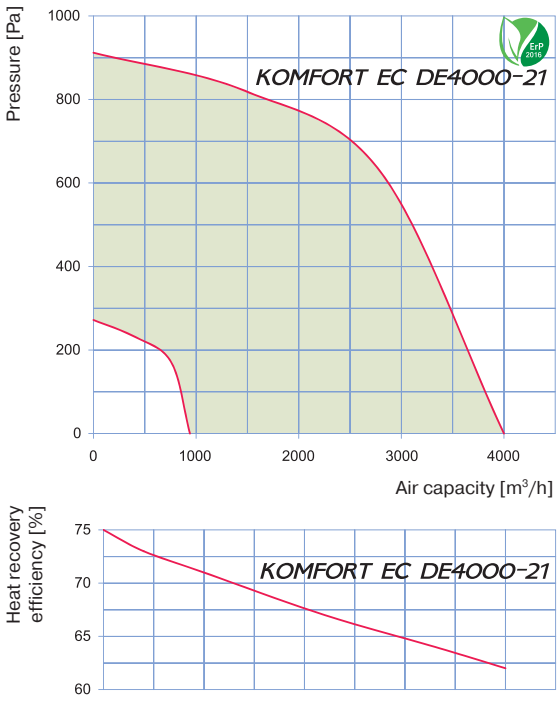

Suspended heat recovery air handling units

KOMFORT EC DW

Air capacity – up to 3800 m³/h

Heat recovery efficiency – up to 90 %

Application

- Air handling units for efficient supply and exhaust ventilation in flats, houses, cottages and other buildings.
- Heat recovery minimises ventilation heat losses.
- Provide controllable air exchange to create the best suitable indoor microclimate.
- Compatible with round Ø200 to 400 mm round air ducts.

Design

- The casing is made of double-skinned aluzinc panels, internally filled with 20 or 25 mm mineral wool layer for heat and sound insulation.
- The casing has fixing brackets with vibration absorbing connectors for easy installation.
- The spigots for connection to the air ducts are located at the side of the unit and are rubber sealed for airtight connection to the air ducts.
- The service panel ensures easy access to the internals for cleaning, filter replacement and other maintenance operations.

Fans

- High-efficient external rotor EC motors and centrifugal impellers with backward curved blades are used for air supply and exhaust.
- EC motors have the best power consumption to air capacity ratio and meet the latest demands concerning energy saving and high-efficient ventilation.
- EC motors are featured with high performance, low noise level and totally controllable speed range.
- Dynamically balanced impellers.

Heat recovery

- The **KOMFORT EC DW600/1000** models are equipped with a high-efficient counter-flow polystyrene heat exchangers with a large surface area.
- The **KOMFORT EC DW2000/3800** models are equipped with a high-efficient cross-flow aluminium heat exchangers with a large surface area.
- The air flows are fully separated within the heat exchanger. Odours and contaminants contained in the extract air are not transferred to the supply air flow.
- Heat recovery is based on utilization of heat energy contained in the extract air stream for heating up of supply air stream. Extract air transfers most of its heat to the intake air flow. Heat recovery reduces heat energy losses in cold seasons. In summer the heat exchanger performs reverse and intake air is cooled in the heat exchanger by the cool extract air. This contributes to better performance of the air conditioner in ventilated premises.
- The electronic frost protection system based on bypass and heater is used to prevent the heat exchanger freezing in cold seasons. The bypass damper is opened and the heater is turned on automatically according to the feedback from the temperature sensor. Cold intake air passes by the heat exchanger and is warmed up to set temperature in the heat exchanger. Synchronously extract air that passes by the heat exchanger is used for its defrosting. After a freezing danger is over the bypass damper is closed, the heater is turned off. The unit reverts to the normal operation mode.
- The drain pan under the heat exchanger block is used for condensate collection and drainage.

Air heater

- The unit is equipped with a water (glycol) heater for operation at low outside air temperature.
- The integrated water heater is activated to warm up supply air flow if set indoor air temperature may not be reached by means of heat recovery only.
- Smooth water heater power control ensures automatic supply air temperature maintaining.
- The air temperature sensor downstream of the waterheating coils and the return water temperature sensor are used for freezing protection of the water heater.

Air filtration

- **KOMFORT EC DW600/1000:** the built-in G4 (optionally F7) pocket supply filter and G4 cassette extract filter provide efficient air filtration.
- **KOMFORT EC DW2000/3800:** the built-in G4 supply and extract cassette filters provide efficient air filtration.

Control and automation

The unit incorporates an integrated control system with a wall-mounted control panel and a sensor display.

- The standard delivery set includes a 10 m cable for connection of the unit and the control panel.
- Automation functions:

• Activating/deactivating the unit.
• Setting required speed for the supply and extract fan for the unit air flow control. Each speed is individually adjusted during set-up.
• Set supply air temperature maintaining by means of the circulating pump and heat medium regulating valve control.
• Water heater freezing protection on feedback from the temperature sensor downstream of the water heating coils and the return water temperature sensor.
• Pre-heating cycle prior to the heater start and maintaining set return

water temperature during the fan shutoff.
- Opening/closing the bypass damper for summer ventilation.
- Setting and maintaining room or duct air temperature.
- Timer activation/deactivation and set-up.
- Setting day- and week-scheduled operation of the unit.
- Operation control on feedback from **FS1** duct humidity sensor (to be ordered separately) or on the humidity sensor in the control panel.
- Filter clogging control.
- System shutdown on signal from the fire alarm panel.
- Controlling supply and exhaust air dampers (to be ordered separately).
- Cooler control (to be ordered separately).

Mounting

- ❑ Mounting to the ceiling with fixing brackets.
- ❑ The correct mounted unit must provide free condensate collection and drainage as well as good access for servicing and filter replacement.
- ❑ Access for maintenance:
- **KOMFORT EC DW600/1000** – on the right or left panel side;
- **KOMFORT EC DW2000/3800** – on the bottom.

Overall dimensions

Model	Dimensions [mm]										Figure №
	ØD	B	B1	B2	B3	B4	H	H1	L	L1	
KOMFORT EC DW600-2	199	827	711	–	294	345	283	120	1238	1286	1
KOMFORT EC DW1000-4	249	1350	1215	607.5	430	655	317	143	1346	1395	1
KOMFORT EC DW2000-2	314	1050	915	457.5	247	575	750	375	1360	1408	2
KOMFORT EC DW3800-2	399	1265	1130	565	297	632.5	830	415	1595	1643	2

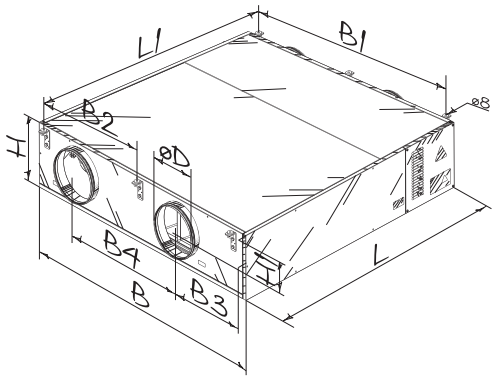

Fig.1

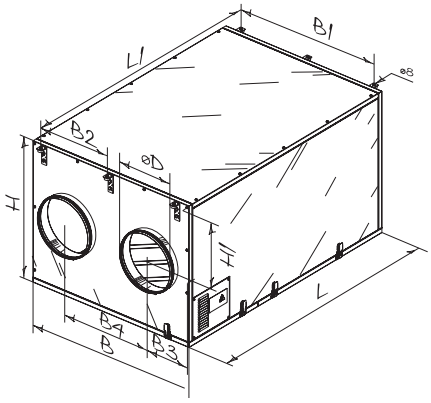

Fig.2

Accessories

Model	Replaceable filter G4 (pocket)	Replaceable filter F7 (pocket)	Replaceable filter G4 (cassette)	Replaceable filter G4 (cassette)	Duct humidity sensor
KOMFORT EC DW600-2	FPT-EC DW600 G4	FPT-EC DW600 F7	-	FP-EC DW600 G4	FS1
KOMFORT EC DW1000-4	FPT-EC DW1000 G4	FPT-EC DW1000 F7	-	FP-EC DW1000 G4	
KOMFORT EC DW2000-2	-	-	FP-EC DW2000 G4		
KOMFORT EC DW3800-2	-	-	FP-EC DW3800 G4		

Technical data

Parameters	KOMFORT EC DW600-2	KOMFORT EC DW1000-4	KOMFORT EC DW2000-2	KOMFORT EC DW3800-2
Voltage [V / 50-60 Hz]	1 ~ 230			3 ~ 400
Number of water (glycol) coil rows	2	4	2	
Power [kW]	0.27	0.4	0.84	1.99
Current [A]	1.6	2.26	5	3.4
Maximum air capacity [m³/h]	600	1000	1950	3800
RPM	3060	2780	2920	2580
Sound pressure level at 3 m [dBA]	53	52	58	59
Transported air temperature [°C]	-25 up to +60		-25 up to +40	-25 up to +50
Casing material	aluzinc			
Insulation	20 mm mineral wool		25 mm mineral wool	
Extract filter	cassette G4			
Supply filter	pocket G4 (F7)*		cassette G4	
Connected air duct diameter [mm]	200	250	315	400
Weight [kg]	77	98	194	295
Heat recovery efficiency [%]**	up to 90		up to 75	
Heat exchanger type	counter-flow		cross-flow	
SEC class***	A	-	-	-
Heat exchanger material	aluminum			

*Option.
** Heat recovery efficiency is specified in compliance with the EN308 EU norms.
*** The EC norm 1254/2014 does not apply if maximum air capacity is >1000 m³/h

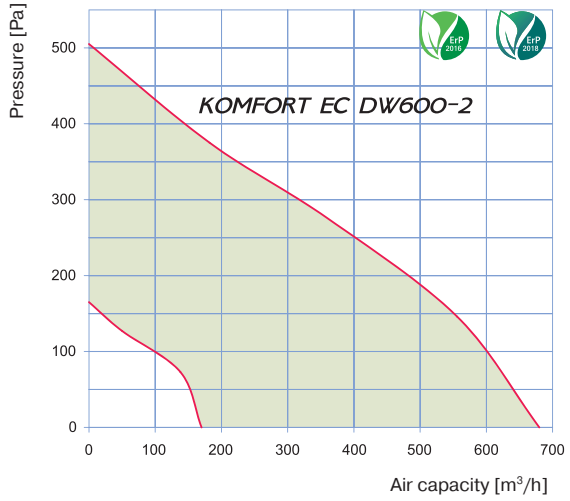

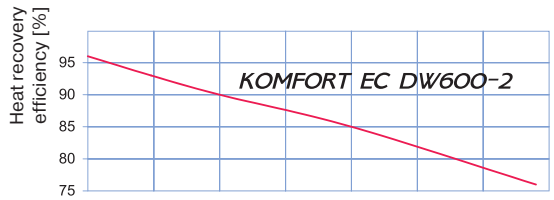

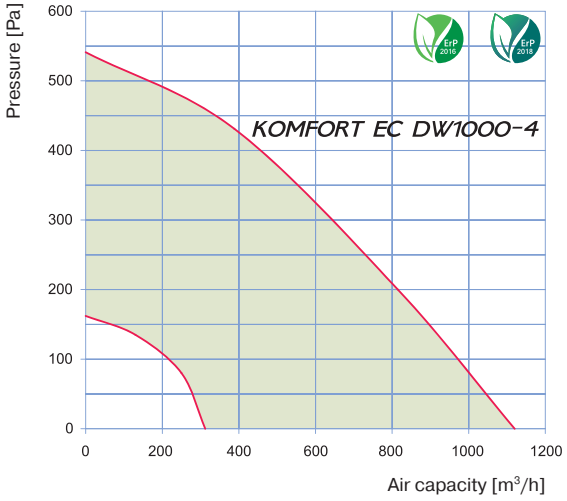

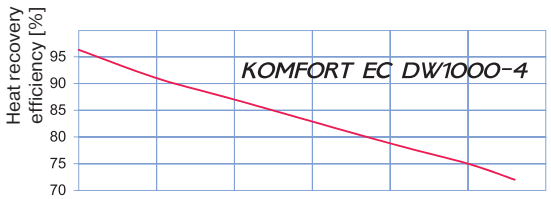

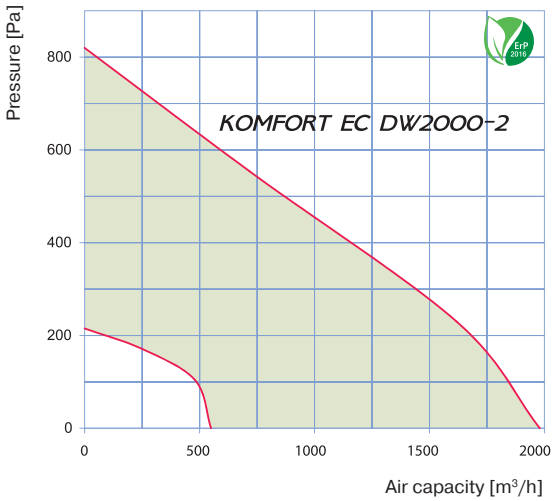

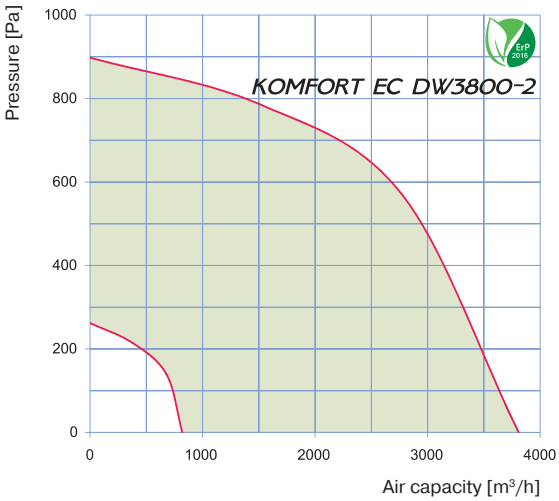

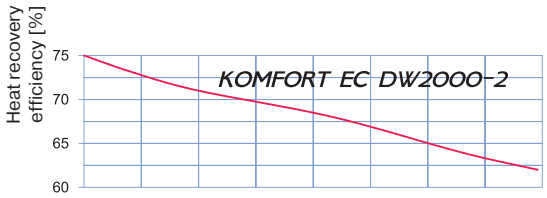

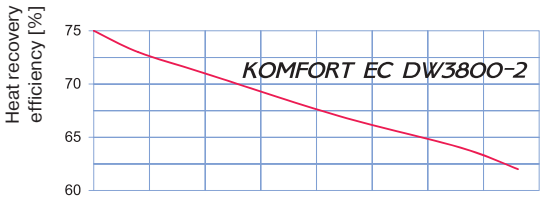

Hot water coil calculation diagram

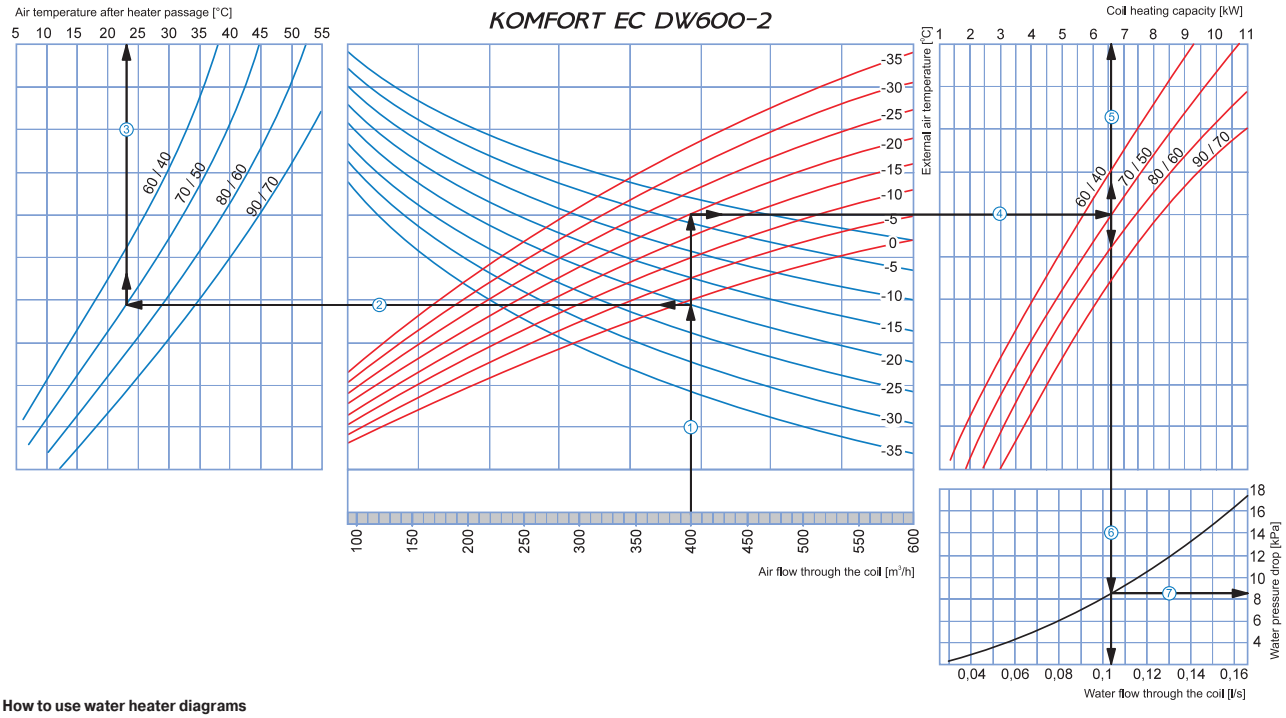

How to use water heater diagrams

Sample parameters: Air flow = 400 m³/h. Outside air temperature =-20°C. Water temperature (in/out) = 70/50 °C.

- **Supply air temperature:** prolong the line of air flow (e.g. 400 m³/h) ① up to the point where it crosses the outside air temperature (blue curve, e.g. -20°C); then draw a horizontal line ② from this point to the left until it crosses the water in/out temperature curve (e.g. 70/50 °C). From this point draw a vertical line ③ to the supply air temperature axis on top of the graphic (+23°C).
- **Heating coil capacity:** Prolong the line ① up to the point where it crosses the outside air temperature (e.g. -20°C, red curve) and draw a horizontal line ④ from this point to the right until it crosses the water in/out temperature curve (e.g., 70/50 °C). From here draw a vertical line ⑤ up to the scale representing the heating coil capacity (6.6 kW).
- **Water flow:** Prolong the line ⑤ down to the water flow axis ⑥ at the bottom of the graphic (0.105 l/s).
- **Water pressure drop:** Draw the line ⑦ from the point where the line ⑥ crosses the black curve to the pressure drop axis (8.5 kPa).

Hot water coil calculation diagram

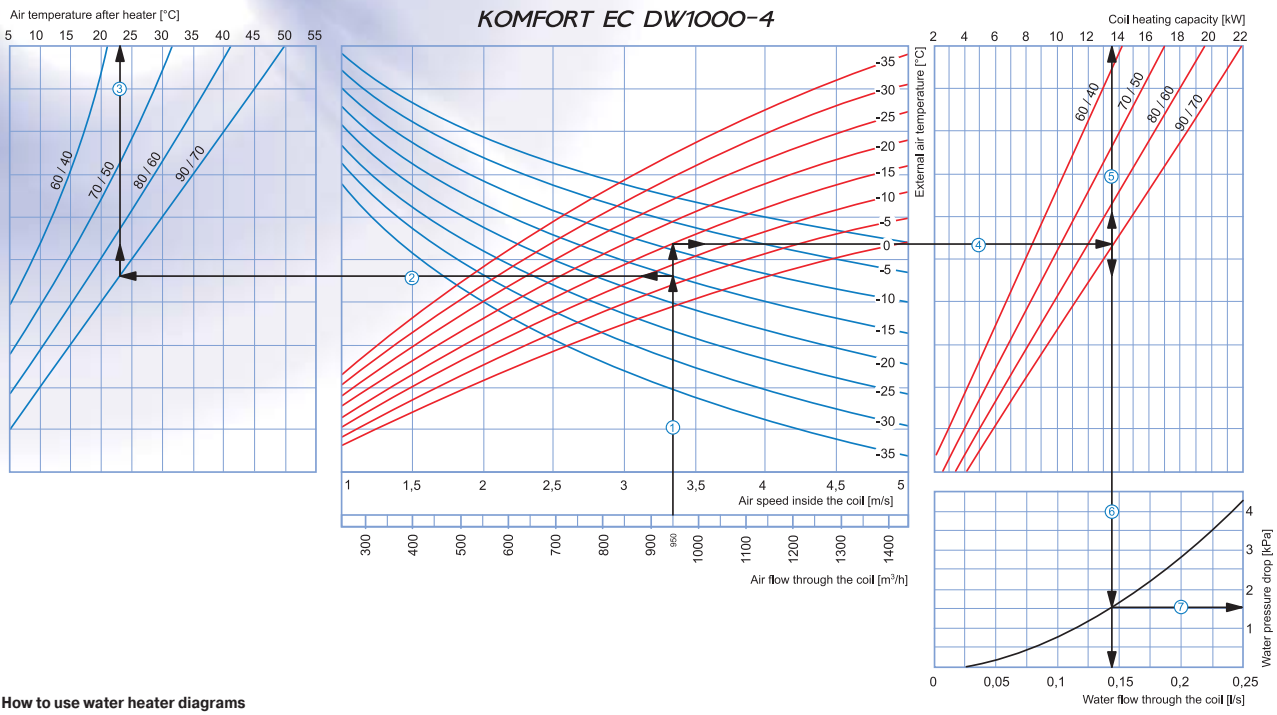

How to use water heater diagrams

Sample parameters: Air flow = 950 m³/h. Outside air temperature =-15°C. Water temperature (in/out) = 90/70 °C.

- **Air Speed inside coil:** Starting from 950 m³/h on the air flow scale draw a vertical line ①. This line crosses the air speed axis and shows a value of about 3.35 m/s.
- **Supply air temperature:** prolong the line ① up to the point where it crosses the outside air temperature (blue curve, e.g. -15°C); then draw a horizontal line ② from this point to the left until it crosses the water in/out temperature curve (e.g. 90/70 °C). From this point draw a vertical line ③ to the supply air temperature axis on top of the graphic (+23°C).
- **Heating coil capacity:** Prolong the line ① up to the point where it crosses the outside air temperature (e.g. -15°C, red curve) and draw a horizontal line ④ from this point to the right until it crosses the water in/out temperature curve (e.g., 90/70 °C). From here draw a vertical line ⑤ up to the scale representing the heating coil capacity (13.5 kW).
- **Water flow:** Prolong the line ⑤ down to the water flow axis ⑥ at the bottom of the graphic (0.14 l/s).
- **Water pressure drop:** Draw the line ⑦ from the point where the line ⑥ crosses the black curve to the pressure drop axis (1.5 kPa).

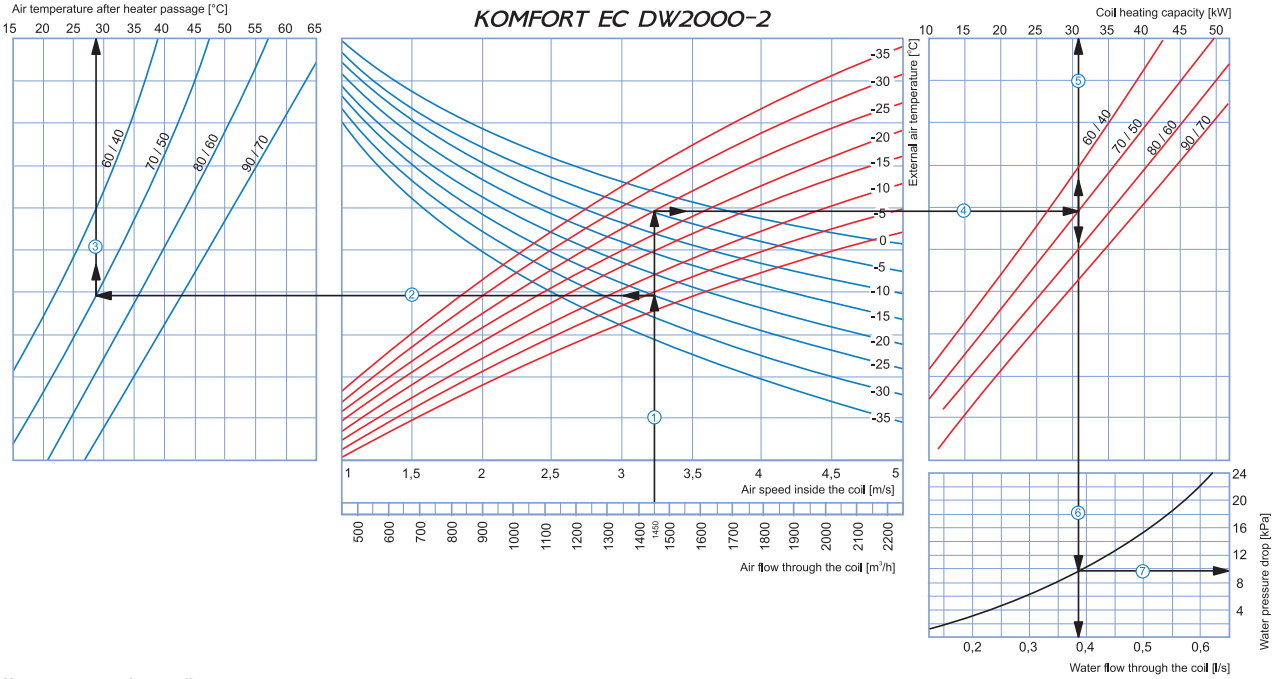

How to use water heater diagrams

Sample parameters: Air flow = 1450 m³/h. Outside air temperature =-25°C. Water temperature (in/out) = 70/50 °C.

- **Air Speed inside coil:** Starting from 1450 m³/h on the air flow scale draw a vertical line ①. This line crosses the air speed axis and shows a value of about 3.2 m/s.
- **Supply air temperature:** prolong the line ① up to the point where it crosses the outside air temperature (blue curve, e.g. -25°C); then draw a horizontal line ② from this point to the left until it crosses the water in/out temperature curve (e.g. 70/50 °C). From this point draw a vertical line ③ to the supply air temperature axis on top of the graphic (+28°C).
- **Heating coil capacity:** Prolong the line ① up to the point where it crosses the outside air temperature (e.g. -25°C, red curve) and draw a horizontal line ④ from this point to the right until it crosses the water in/out temperature curve (e.g., 70/50 °C). From here draw a vertical line ⑤ up to the scale representing the heating coil capacity (31.0 kW).
- **Water flow:** Prolong the line ⑤ down to the water flow axis ⑥ at the bottom of the graphic (0.38 l/s).
- **Water pressure drop:** Draw the line ⑦ from the point where the line ⑥ crosses the black curve to the pressure drop axis (9.8 kPa).

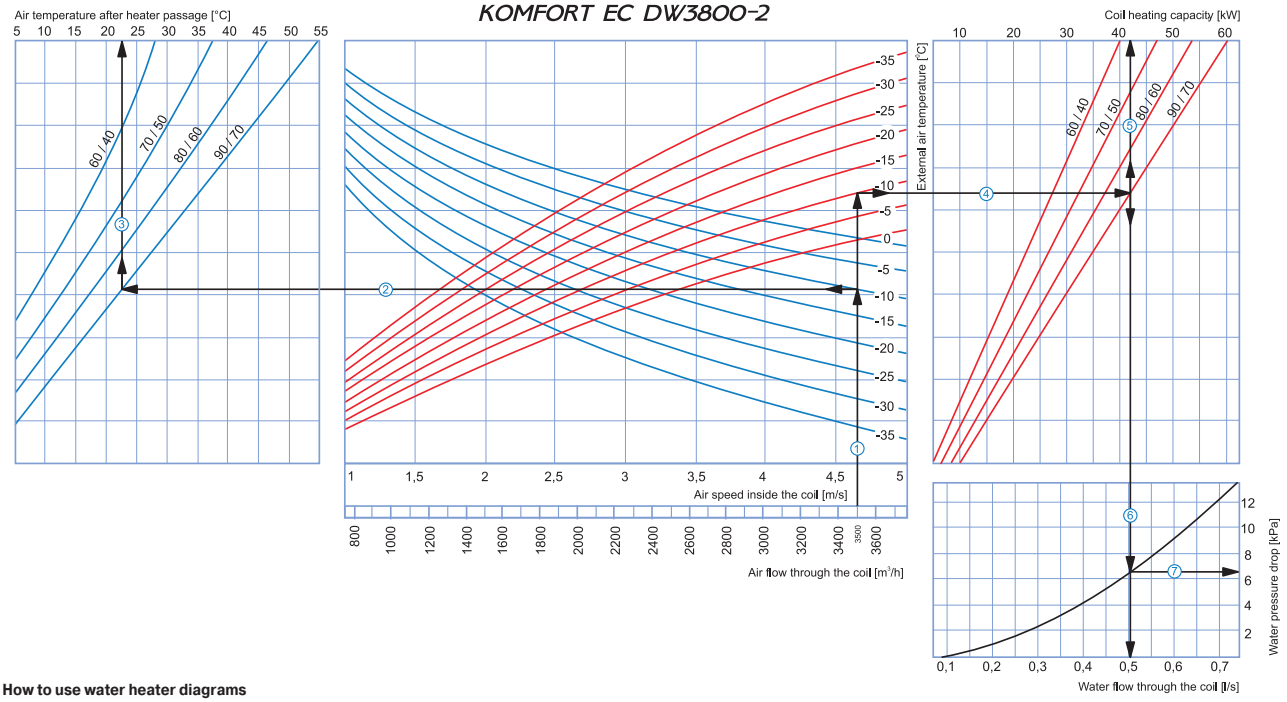

How to use water heater diagrams

Sample parameters: Air flow = 3500 m^3/h. Outside air temperature =-10°C. Water temperature (in/out) = 90/70 °C.

- **Air Speed inside coil:** Starting from 3500 m^3/h on the air flow scale draw a vertical line ①. This line crosses the air speed axis and shows a value of about 4.65 m/s.
- **Supply air temperature:** prolong the line ① up to the point where it crosses the outside air temperature (blue curve, e.g. -10°C); then draw a horizontal line ② from this point to the left until it crosses the water in/out temperature curve (e.g. 90/70 °C). From this point draw a vertical line ③ to the supply air temperature axis on top of the graphic (+22.5°C).
- **Heating coil capacity:** Prolong the line ① up to the point where it crosses the outside air temperature (e.g. -10°C, red curve) and draw a horizontal line ④ from this point to the right until it crosses the water in/out temperature curve (e.g., 90/70 °C). From here draw a vertical line ⑤ up to the scale representing the heating coil capacity (42.0 kW).
- **Water flow:** Prolong the line ⑤ down to the water flow axis ⑥ at the bottom of the graphic (0.5 l/s).
- **Water pressure drop:** Draw the line ⑦ from the point where the line ⑥ crosses the black curve to the pressure drop axis (6.5 kPa).

Kitchen heat recovery air handling units

KOMFORT EC SKE270-1.5

Air capacity – up to 270 m³/h

Heat recovery efficiency – up to 95 %

Use

- Air handling unit with a kitchen hood for efficient supply and exhaust ventilation in flats, houses, cottages and other buildings.
- Heat recovery minimises ventilation heat losses.
- Controllable air exchange for creating the best suitable indoor microclimate.
- Compatible with round Ø125 mm air ducts.

Design

- The casing is made of double-skinned white polymer coated steel panels, internally filled with polypropylene foam layer of 15 mm for heat and sound insulation.
- The unit includes an integrated kitchen hood with control buttons on the front panel.
- Wall mounting with the fixing components on the casing.
- The spigots for connection to the air ducts are located on the top of the unit and are rubber sealed for airtight connection to the air ducts.
- The hinged panel of the casing ensures easy access to the internals for cleaning and other maintenance operations.

Fans

- High-efficient external rotor EC motors and centrifugal impellers with backward curved blades are used for air supply and exhaust.
- EC motors have the best power consumption to air capacity ratio and meet the latest demands concerning energy saving and high-efficient ventilation.
- EC motors are featured with high performance, low noise level and totally controllable speed range.
- Dynamically balanced impellers.

Heat recovery

- The unit is equipped with a plate counter-flow polystyrene heat exchanger with a large surface area and high heat recovery efficiency.
- The air flows are fully separated within the heat exchanger. Odours and contaminants contained in the extract air are not transferred to the supply air flow.
- Heat recovery is based on utilization of heat energy contained in the extract air stream for heating up of supply air stream. Extract air transfers most of its heat to the intake air flow. Heat recovery reduces heat energy losses in cold seasons. In summer the heat exchanger performs reverse and transfers a part of the accumulated coolness from the cooled extract air for warming up of intake air. This contributes to better performance of the air conditioner in ventilated premises.
- The electronic frost protection system is used to prevent the heat exchanger freezing in cold seasons. In case of heat exchanger freezing danger communicated by the temperature sensor the supply fan stops to let warm extract air warm up the heat exchanger. After that the the supply fan is turned on and the unit reverts to the normal operation mode.
- The drain pan under the heat exchanger block is used for condensate collection and drainage.
- When the kitchen hood is ON, the extract air is exhausted through it and does not come in contact with the heat exchanger.

Air heater

- The unit is equipped with an electric heater for operation during cold seasons at low outside temperature.
- The integrated electric heater is activated to warm up supply air up to +30 °C if set indoor air temperature may not be reached by means of heat recovery only.
- The electric heater shuts down once the set air temperature is reached.
- Two integrated overheat protection thermostats, one actuated at +60 °C with automatic restart and the other one actuated at +90 °C with manual restart.

Air filtration

- The built-in G4 pocket supply filter and G4 pocket extract filter provide efficient air filtration. Optionally, an F7 supply filter may be used.
- The kitchen hood has a multilayer fat aluminium filter.

Control and automation

- The unit incorporates an integrated control system, a built-in control panel with an LCD display and a remote control.
- The air handling unit has two operation modes:

• **Heat recovery mode.** When the kitchen hood is off, warm air from the premises is extracted through the air ducts to the heat exchanger to transfer its heat energy to supply air stream.

• **Kitchen hood mode.** When the kitchen hood is on, warm air is extracted through the kitchen hood and is removed through the exhaust air duct outside. Both operation modes provide balanced indoor ventilation.

- Automation functions:

• Activating/deactivating the unit.

• Setting low, medium and high speeds for the supply and extract fan. Air flow control. Each speed is individually adjusted during set-up.

• Changeover between heat recovery and kitchen hood operation modes.

• Unit shutdown on signal from a fire alarm panel.

• Switching to the maximum speed in case of activation of a CO_2 sensor,

humidity sensor, IAQ sensor or any other sensor (available separately).
- Filter clogging control and indication by operating hours.
- Setting week-scheduled operation of the unit.
- Preventing overheating of the electric heating elements.

Mounting

❑ Wall mounting in the kitchen.

❑ The correct mounted unit must provide sufficient access for servicing and repair operations.

❑ The unit must be connected to a drain system.

❑ To enable the correct supply air warming function install a duct temperature sensor from the delivery set not further than 1 m from the spigot in the supply air duct.

Technical data

Parameters	KOMFORT EC SKE270-1.5		
Voltage [V / 50-60 Hz]	1 ~ 230		
Speed	1	2	3
Fan power [W]	16	94	187
Fan current [A]	0.1	0.6	1.1
Electric heater power [kW]	1.5		
Electric heater current [A]	6.5		
Total unit power [kW]	1.69		
Total unit current [A]	7.6		
Maximum air capacity [m³/h]	40	190	270
RPM	1280	2240	3200
Sound pressure level at 3 m [dBA]	28	39	42
Transported air temperature [°C]	-25 up to +60		
Casing material	steel		
Insulation	15 mm polypropylene foam		
Extract filter	pocket G4		
Supply filter	pocket G4 (F7)*		
Replaceable filter**	FPT-EC SKE270 G4 FPT-EC SKE270 F7		
Connected air duct diameter [mm]	125		
Weight [kg]	38		
Heat recovery efficiency [%]***	up to 95		
Heat exchanger type	counter-flow		
SEC class	A		
Heat exchanger material	polystyrene		

*Option.
**Replaceable filter kits are specially ordered accessories and are available separately.
*** Heat recovery efficiency is specified in compliance with the EN308 EU norms.

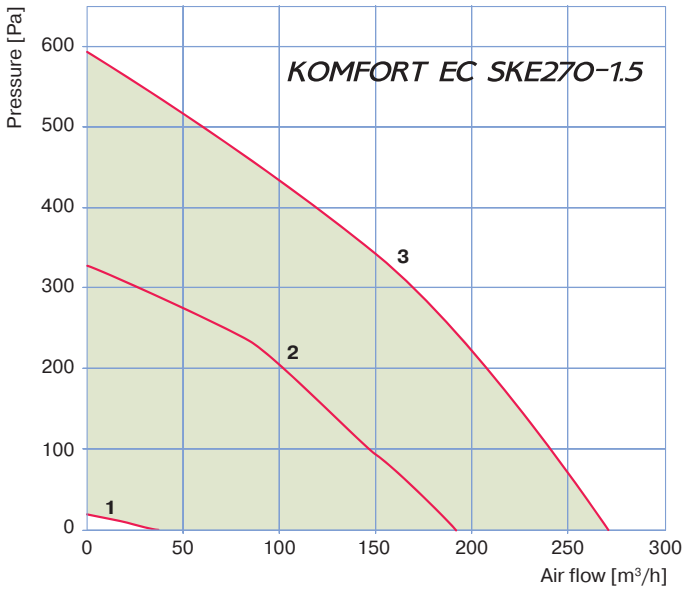

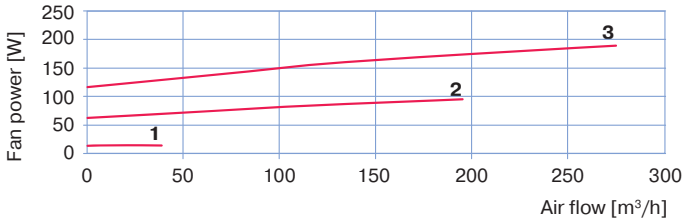

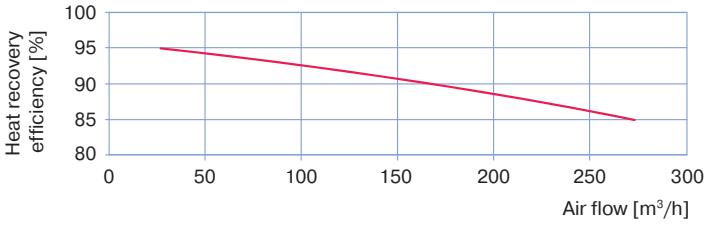

Overall dimensions, mm

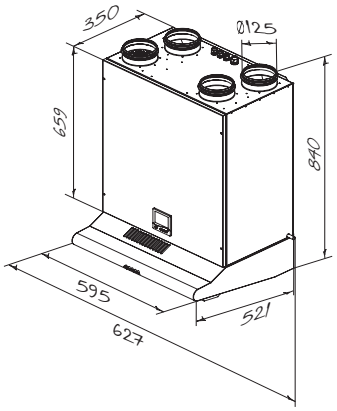

Wall-mounted heat recovery air handling units

KOMFORT EC U330
KOMFORT EC UE330-2

Air capacity – up to 331 m³/h
Heat recovery efficiency – up to 98 %

Application

- Air handling units for efficient supply and exhaust ventilation in flats, houses, cottages and other buildings.
- Heat recovery minimises ventilation heat losses.
- Controllable air exchange for creating the best suitable indoor microclimate.
- Compatible with round Ø150 mm air ducts.

Design

- The casing is made of polymer coated steel panels, internally filled with mineral wool layer of 20 mm for heat and sound insulation.
- The included fixing bracket facilitates the unit wall mounting.
- The hinged panel of the casing ensures easy access to the internals for cleaning and other maintenance operations.
- The spigots for connection to the air ducts are located at the angle and are rubber sealed for airtight connection to the air ducts.

Fans

- High-efficient external rotor EC motors and centrifugal impellers with backward curved blades for air supply and exhaust.
- EC motors have the best power consumption to air capacity ratio and meet the latest demands concerning energy saving and high-efficient ventilation.
- EC motors are featured with high performance, low noise level and totally controllable speed range.
- Dynamically balanced impellers.

Heat recovery

- The unit is equipped with a plate counter-flow polystyrene heat exchanger with a large surface area and high heat recovery efficiency.
- Heat recovery is based on the utilization of the thermal energy of the extract air for heating up supply air. Extract air transfers most of its heat to the intake air flow. Heat recovery reduces heat losses in cold seasons.
- In summer the heat exchanger performs reverse and intake air is cooled in the heat exchanger by the cool extract air. This contributes to better performance of the air conditioner in ventilated premises.
- The drain pan under the heat exchanger block is used for condensate collection. The drain pan is fitted with a drain pipe for condensate removal.
- The electronic freeze protection system is used to prevent the heat exchanger freezing in the cold season:

• **KOMFORT EC UE330-2**: if air temperature in the intake air duct falls down below -7 °C, the bypass damper is opened periodically for 5 minutes to let intake air flow along the bypass air duct. Synchronously, the heat exchanger surface is warmed up with warm extract air flow.

• **KOMFORT EC U330**: in case of a freezing danger registered by the temperature sensor the supply fan turns off to let the heat exchanger surface get warmed up with warm extract air flow. After that the the supply fan is turned on and the unit reverts to the standard operation mode.

Air heater

- The **KOMFORT EC UE330-2** model includes an electric heater for operation at low outside air temperatures.
- The built-in electric heater is activated to warm up supply air flow if set indoor air temperature may not be reached by means of heat recovery only.
- The electric heater has a reliable overheating protection.

Air filtration

- Two built-in G4 cassette filters provide efficient supply and extract air filtration.

Control and automation

- The unit incorporates an integrated control system, a wall-mounted control panel with an LCD display and a remote control.
- The standard delivery set includes a 10 m cable for connection of the unit and the control panel.
- Automation functions:

• Activating/deactivating the unit.
• Setting low, medium and high speeds for the supply and extract fan. Air flow control. Each speed is individually set up during adjustment.
• Heater turning on/off and supply air temperature setting for **KOMFORT EC UE330-2**.
• Timer turning on/off and adjusting timer operation.
• Enabling/disabling heat recovery operation mode by means of manual opening/closing the bypass damper.
• Indication of basic parameters and operation modes on the wall-mounted panel as indoor temperature, time, etc.
• Failure indication and filter replacement indication by motor meter.
• Date/time setting.
• Setting week-scheduled operation of the unit.
• Reliable heat exchanger freezing protection and heater overheating protection.

Mounting

- The unit is designed for wall mounting.
- The filters are accessible through the front panel.
- The delivery set includes a special wall-mounted fixing bracket and anchor bolts for simple and comfortable mounting.
- The mounting place must provide enough space for connection to drain system and condensate drainage.

Technical data

Parameters	KOMFORT EC U330			KOMFORT EC UE330-2		
Speed	1	2	3	1	2	3
Voltage [V / 50-60 Hz]	1 ~ 230					
Fan power [W]	36	138	220	36	138	220
Fan current [A]	0.29	0.97	1.48	0.29	0.97	1.48
Electric heater power [kW]	-			2.0		
Electric heater current [A]	-			8.72		
Total unit power [kW]	0.22			2.22		
Total unit current [A]	1.5			10.2		
Maximum air capacity [m³/h]	133	270	331	133	270	331
RPM	1440	2200	2900	1440	2200	2900
Sound pressure level at 3 m [dBA]	28	34	41	28	34	41
Transported air temperature [°C]	-25 up to +60					
Casing material	polymer coated steel					
Insulation	20 mm mineral wool					
Extract / supply filter	cassette G4					
Connected air duct diameter [mm]	150					
Weight [kg]	43			44		
Heat recovery efficiency [%]*	83 up to 98					
Heat exchanger type	counter-flow					
SEC class	A					
Heat exchanger material	polystyrene					

* Heat recovery efficiency is specified in compliance with the EN308 EU norms.

Overall dimensions, mm

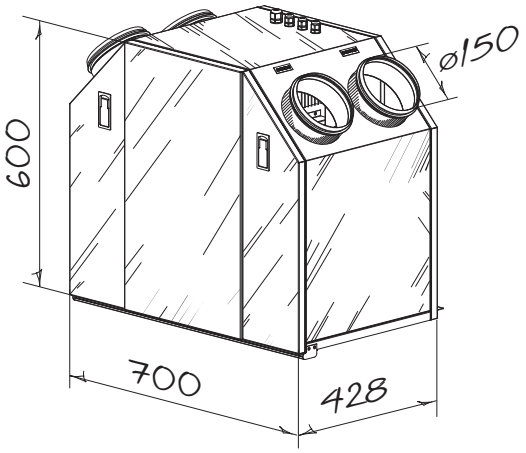

Accessories

Model	Replaceable filter G4 (cassette)
KOMFORT EC U330	FP-EC UE330 G4
KOMFORT EC UE330-2	

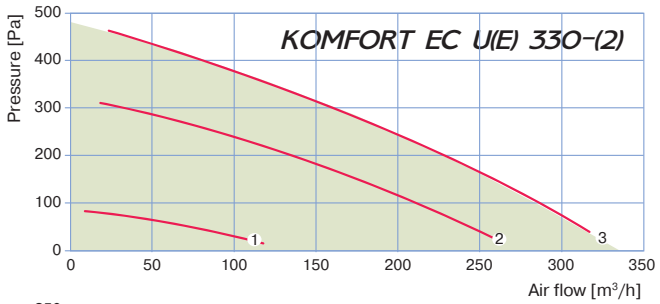

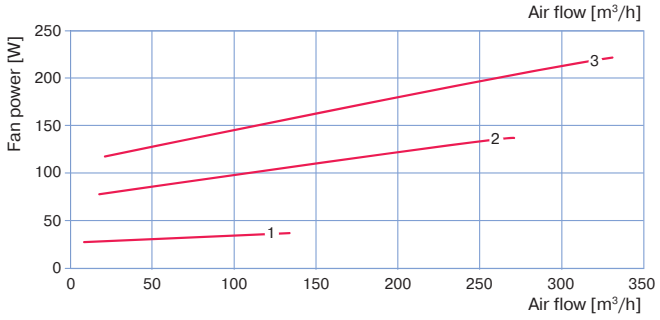

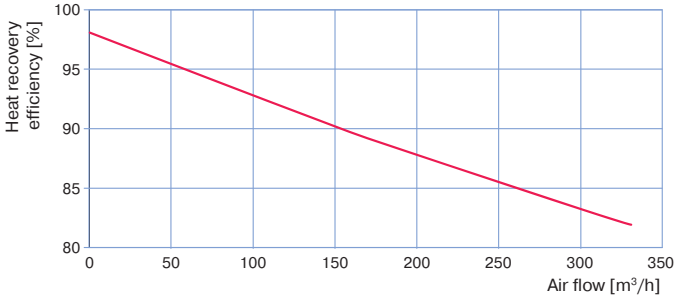

Wall-mounted heat recovery air handling units

KOMFORT EC S
KOMFORT EC SB

Air capacity – up to 700 m³/h
Heat recovery efficiency – up to 98 %

Application

- Air handling units for efficient supply and exhaust ventilation in flats, houses, cottages and other buildings.
- Heat recovery minimises ventilation heat losses.
- Controllable air exchange for creating the best suitable indoor microclimate.
- Compatible with round Ø125, 160, 200 mm air ducts.

Design

The casing is made of double-skinned polymer coated steel panels, internally filled with 20 mm mineral wool layer for heat and sound insulation.

The hinged panel of the casing ensures easy access to the internals for cleaning and other maintenance operations.

The spigots for connection to the air ducts are located at the top of the unit and are rubber sealed for airtight connection to the air ducts.

Fans

High-efficient external rotor EC motors and centrifugal impellers with backward curved blades are used for air supply and exhaust.

EC motors have the best power consumption to air capacity ratio and meet the latest demands concerning energy saving and high-efficient ventilation.

EC motors are featured with high performance, low noise level and totally controllable speed range.

Dynamically balanced impellers.

Heat recovery

The unit is equipped with a plate counter-flow polystyrene heat exchanger with a large surface area and high heat recovery efficiency.

Heat recovery is based on utilization of heat energy contained in the extract air stream for heating up the supply air stream. Extract air transfers most of its heat to the intake air flow. Heat recovery reduces heat energy losses in cold seasons. In summer the heat exchanger performs reverse and intake air is cooled in the heat exchanger by the cool extract air. This contributes to better performance of air conditioners in ventilated premises.

The drain pan under the heat exchanger block is used for condensate collection and drainage. The drain pan is fitted with a drain pipe for condensate removal.

The electronic freeze protection system is used to prevent the heat exchanger freezing in cold seasons. In case of a freezing danger registered by the temperature sensor the supply fan turns off to let the heat exchanger surface get warmed up with warm extract air flow. After a freezing danger is over the supply fan is turned on and the unit reverts to the standard operation mode.

Bypass

The **KOMFORT EC SB** units are equipped with the 100% bypass for summer ventilation (room cooling by the cool intake air).

Air filtration

Two built-in G4 cassette filters provide efficient supply and extract air filtration.

The replaceable F7 supply air filter is an additional option.

Control and automation

KOMFORT EC S S11 / **KOMFORT EC SB S11** units incorporate an integrated control system with the S11 wall-mounted control panel with an LCD display.

KOMFORT EC S S15 / **KOMFORT EC SB S15** units incorporate an integrated control system with the S15 wall-mounted control panel with a LED indication. The units are equipped with the Type B USB Connector for advanced options setting in a special software.

The standard delivery set includes a 10 m cable for connection of the unit and the control panel.

<u>S11 automation functions</u>:

- Activating/deactivating the unit.
- Setting required supply and extract fan speed for the unit air flow control. Each speed is individually adjusted during set-up.
- Bypass damper opening / closing for summer ventilation.
- Setting and maintaining room or duct air temperature.
- Timer turning on/off and timer operation adjustment.
- Setting day- and week-scheduled operation of the unit.
- Operation control on feedback from FS1 duct humidity sensor (available separately) or from the humidity sensor in the control panel.
- Filter clogging indication by motor meter.
- System shutdown on signal from a fire alarm panel.
- Controlling supply and exhaust air dampers (available separately).
- Alarm indication with an error code indication.
- Cooler control (to be ordered separately).

<u>S15 automation functions</u>:

- Activating/deactivating the unit.
- Air capacity control (selecting low, medium or high speed).
- Bypass damper opening/closing for summer ventilation
- Alarm indication.
- Filter maintenance indication.

<u>Extra functions of the S15 automation with the installed software:</u>

- Fan speed adjustment from 0 to 100 %. Each speed is individually adjusted for the supply and the exhaust fans.
- Operation control on feedback from FS2 duct humidity sensor (available separately).
- Unit operation setting according to external control unit (to be ordered separately).

- Temperature setting for freeze protection system activation.
- Control and operation adjustment of the filter maintenance timer.
- Error code indication.
- External control unit, bypass and humidity level control.
- Software version upgrading.

Mounting

❑ The units are designed for wall mounting.

❑ The casing is universal. The side of air ducts connection may be changed by turning the unit by 180° and reversing the front and the back panels.

❑ The mounting place must provide enough space for connection to drain system and condensate drainage using the 20x32 KIT SFK kit (available separately).

Overall dimensions

Model	Dimensions, mm						
	ØD	B	H	H1	L	L1	L2
KOMFORT EC S160	125	348	650	550	600	388	143
KOMFORT EC SB350	160	610	758	675	775	426	230
KOMFORT EC SB550	200	741	758	675	825	493	284

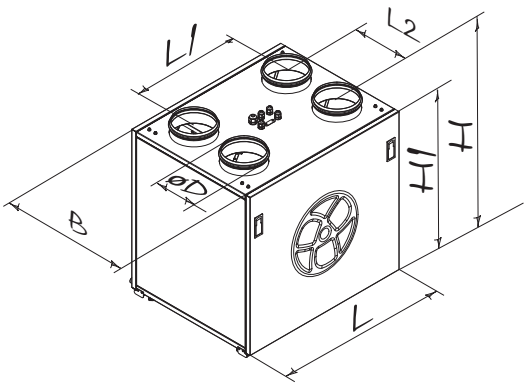

Accessories

Model	Replaceable filter G4 (cassette)	Replaceable filter F7 (cassette)	Duct humidity sensor	Condensate drainage kit
KOMFORT EC S160 S11	FP-EC S160 G4	FP-EC S160 F7	FS1	KIT SFK 20x32
KOMFORT EC SB350 S11	FP-EC SB350 G4	FP-EC SB350 F7		
KOMFORT EC SB550 S11	FP-EC SB550 G4	FP-EC SB550 F7		
KOMFORT EC S160 S15	FP-EC S160 G4	FP-EC S160 F7	FS2	
KOMFORT EC SB350 S15	FP-EC SB350 G4	FP-EC SB350 F7		
KOMFORT EC SB550 S15	FP-EC SB550 G4	FP-EC SB550 F7		

Technical data

Parameters	KOMFORT EC S160	KOMFORT EC SB350	KOMFORT EC SB550
Voltage [V / 50-60 Hz]	1 ~ 230		
Unit power [W]	51	166	333
Unit current [A]	0.4	1.3	2.3
Maximum air capacity [m³/h]	180	415	700
RPM	3770	3200	3230
Sound pressure level at 3 m [dBA]	24	28	28
Transported air temperature [°C]	-25 up to +60		
Casing material	polymer coated steel		
Insulation	20 mm mineral wool	40 mm mineral wool	40 mm mineral wool
Extract filter	cassette G4		
Supply filter	cassette G4 / F7*		
Connected air duct diameter [mm]	125	160	200
Weight [kg]	34	61	70
Heat recovery efficiency [%]**	88 up to 98	88 up to 98	81 up to 97
Heat exchanger type	counter-flow		
SEC Class	A+		
Heat exchanger material	polystyrene		

* Option

** Heat recovery efficiency is specified in compliance with the EN308 EU norms

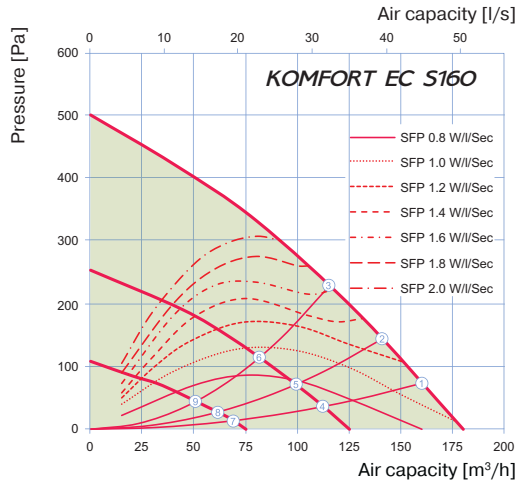

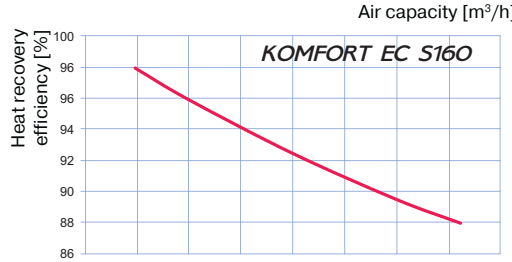

Sound pressure level, A – weighted		Octave-frequency band [Hz]									LpA, 3 m dBA	LpA, 1 m dBA
	Hz	Gen.	63	125	250	500	1000	2000	4000	8000		
LwA to supply inlet	dBA	52	28	46	49	41	35	33	36	29	31	41
LwA to supply outlet	dBA	60	32	52	58	47	37	36	41	35	39	49
LwA to exhaust inlet	dBA	51	27	45	49	41	36	32	35	29	31	41
LwA to exhaust outlet	dBA	60	31	50	59	48	36	36	41	32	39	49
LwA to environmet	dBA	45	25	41	42	34	31	28	27	22	24	34

*Data provided for point 1 of the air flow diagram

Point	Unit power [W]	Total sound pressure level at 3 m [dBA]	Total sound pressure level at 1 m [dBA]
	KOMFORT EC S160		
1	50	24	34
2	51	23	33
3	50	23	33
4	22	20	30
5	22	20	30
6	21	20	30
7	9	13	23
8	9	13	23
9	9	13	23

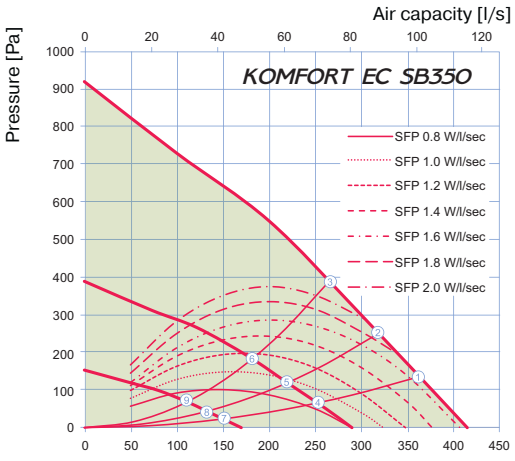

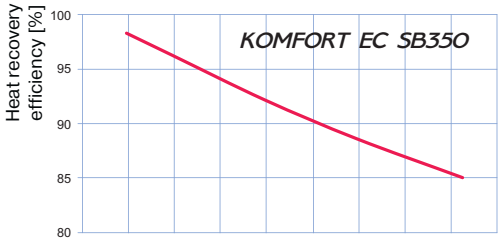

Point	Unit power [W]	Total sound pressure level at 3 m [dBA]	Total sound pressure level at 1 m [dBA]
	KOMFORT EC SB350		
1	165	28	38
2	165	27	37
3	165	27	37
4	63	23	33
5	62	22	32
6	60	22	32
7	21	15	25
8	20	14	24
9	20	14	24

Sound pressure level, A – weighted		Octave-frequency band [Hz]									LpA, 3 m dBA	LpA, 1 m dBA
	Hz	Gen.	63	125	250	500	1000	2000	4000	8000		
LwA to supply inlet	dBA	56	50	46	53	45	39	34	36	32	35	45
LwA to supply outlet	dBA	64	56	52	63	52	39	38	43	35	44	54
LwA to exhaust inlet	dBA	56	52	46	53	45	38	34	36	31	36	46
LwA to exhaust outlet	dBA	64	58	53	62	51	40	38	42	33	44	54
LwA to environmet	dBA	49	45	40	44	38	33	29	27	22	28	38

*Data provided for point 1 of the air flow diagram

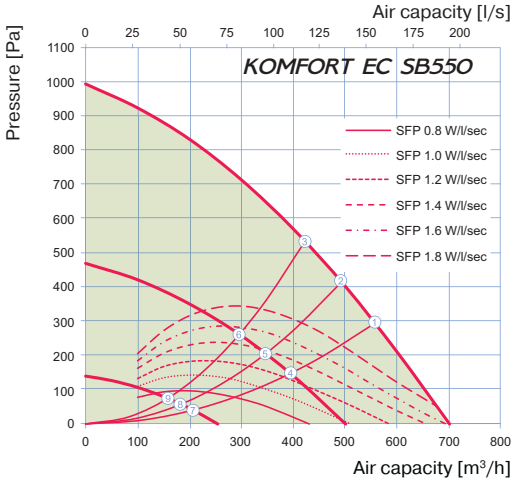

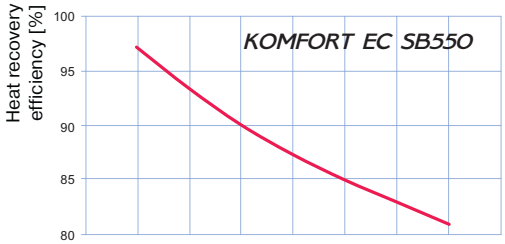

Point	Unit power [W]	Total sound pressure level at 3 m [dBA]	Total sound pressure level at 1 m [dBA]
	KOMFORT EC SB550		
1	332	28	38
2	331	28	38
3	332	27	37
4	133	23	33
5	129	23	33
6	126	22	32
7	32	15	25
8	31	15	25
9	30	14	24

Sound pressure level, A – weighted		Octave-frequency band [Hz]									LpA, 3 m dBA	LpA, 1 m dBA
	Hz	Gen.	63	125	250	500	1000	2000	4000	8000		
LwA to supply inlet	dBA	57	50	45	54	46	42	42	42	32	36	46
LwA to supply outlet	dBA	62	59	47	58	51	43	41	43	39	42	52
LwA to exhaust inlet	dBA	56	48	43	54	45	35	34	36	32	35	45
LwA to exhaust outlet	dBA	62	58	47	59	51	43	40	43	37	41	51
LwA to environmet	dBA	49	44	39	45	38	33	30	28	23	28	38

*Data provided for point 1 of the air flow diagram

Wall-mounted heat recovery air handling units

KOMFORT EC S(B)200(-E)
KOMFORT EC S(B)250(-E)

Air capacity – up to 290 m³/h
Heat recovery efficiency – up to 94 %

Application

- Air handling units for efficient supply and exhaust ventilation in flats, houses, cottages and other buildings.
- Heat recovery minimises ventilation heat losses.
- Controllable air exchange for creating the best suitable indoor microclimate.
- Compatible with round Ø125 and 160 mm air ducts.

Design

- The casing is made of double-skinned polymer coated steel panels, internally filled with 30 mm mineral wool layer for heat and sound insulation.
- The hinged panel of the casing ensures easy access to the internals for cleaning and other maintenance operations.
- The spigots for connection to the air ducts are located at the top of the unit and are rubber sealed for airtight connection to the air ducts.

Fans

- High-efficient external rotor EC motors and centrifugal impellers with forward curved blades are used for air supply and exhaust.
- EC motors have the best power consumption to air capacity ratio and meet the latest demands concerning energy saving and high-efficient ventilation.
- EC motors are featured with high performance, low noise level and totally controllable speed range.
- Dynamically balanced impellers.

Heat recovery

- The **KOMFORT S(SB)200(250)** unit is equipped with a plate counter-flow polysterene heat exchanger that recovers heat.

The drain pan under the heat exchanger block of the KOMFORT S(SB)200(250) is used for condensate collection and drainage.

- The **KOMFORT S(SB)200(250)-E** unit is equipped with a plate enthalpy counter-flow heat exchanger made of enthalpic membrane that recovers heat and humidity.

Due to humidity recovery the enthalpy heat exchanger produces no condensate.

- The air flows are fully separated within the heat exchangers. Odours and contaminants contained in the extract air are not transferred to the supply air flow.
- Heat recovery is based on heat and/or humidity transfer through the plates of the heat exchanger. In the cold season supply air is heated in the heat exchanger by transferring the heat energy of warm and humid extract air to the cold fresh air. Heat recovery minimizes heat losses, which reduces heating costs.
- In summer the heat exchanger performs reverse and intake air is cooled in the heat exchanger by the cool extract air. This reduces load on air conditioners and saves electricity.
- The electronic freeze protection system is used to prevent the heat exchanger freezing in cold seasons. As a standard in case of freezing danger communicated by the exhaust temperature sensor the supply fan is stopped to let warm extract air warm up the heat exchanger. After that the supply fan is turned on and the unit reverts to the normal operation mode. In case of S11 control system the freeze protection may be activated either by means of turning the supply fan off or by means of activating the electric pre-heater (option).

Bypass

- The **KOMFORT EC SB** units are equipped with a 100% bypass for summer cooling ventilation mode.

Air filtration

- **KOMFORT EC S(B)200(-E)** units have two integrated cassette G3 filters for air supply and air extract.
- **KOMFORT EC S(B)250(-E)** units have a G4 cassette supply air filter, a F7 cassette supply air filter for extra efficient filtration and a G4 extract air filter.

Control and automation

- **KOMFORT EC S S11** / **KOMFORT EC SB S11** units incorporate an integrated control system with the S11 wall-mounted control panel with an LCD display.
- **KOMFORT EC S S14** / **KOMFORT EC SB S14** units incorporate an integrated control system with the S14 wall-mounted control panel with a LED indication. The units are equipped with the Type B USB Connector for advanced options setting in a special software.
- The standard delivery set includes a 10 m cable for connection of the unit and the control panel.
- <u>S11 automation functions:</u>

• Activating/deactivating the unit.
• Setting required supply and extract fan speed for the unit air flow control. Each speed is individually adjusted during set-up.
• Bypass damper opening / closing for summer ventilation.
• Setting and maintaining room or duct air temperature.
• Timer turning on/off and timer operation adjustment.
• Setting day- and week-scheduled operation of the unit.
• Operation control on feedback from FS1 duct humidity sensor (available separately) or from the humidity sensor in the control panel.
• Filter clogging indication by motor meter.
• System shutdown on signal from a fire alarm panel.
• Controlling supply and exhaust air dampers (available separately).
• Alarm indication with an error code indication.
• Cooler control (to be ordered separately).

- <u>S14 automation functions</u>:

• Activating/deactivating the unit.
• Air capacity control (selecting low, medium or high speed).

- Bypass damper opening/closing for summer ventilation.
- Alarm indication.
- Filter maintenance indication.

❑ Extra functions of the S14 automation with the installed software:

- Fan speed control from 0 to 100 %. Each speed is individually adjusted for the supply and the exhaust fans.
- Operation control on feedback from FS2 duct humidity sensor or any other optionally connected sensor as CO_2 sensor, IAQ sensor, etc. (not included in the delivery set).
- Unit operation setting according to external control unit (available as a specially ordered accessory).
- Temperature setting for freeze protection system activation.
- Control and operation adjustment of the filter maintenance timer.
- Error code indication.
- Remote control unit, bypass and humidity control.
- Software version upgrading.

Mounting

❑ The units are designed for wall mounting.

❑ The casing is versatile. The side of air ducts connection may be changed by turning the unit by 180° and reversing the front and the back panels.

❑ The mounting place must provide sufficient access for connection to drain system and condensate drainage using the 20x32 KIT SFK kit (available as a specially ordered accessory).

Overall dimensions

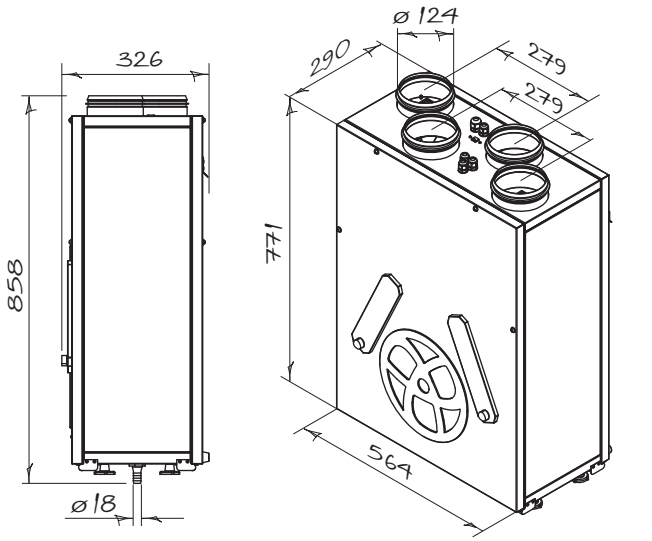

KOMFORT EC S(B)200

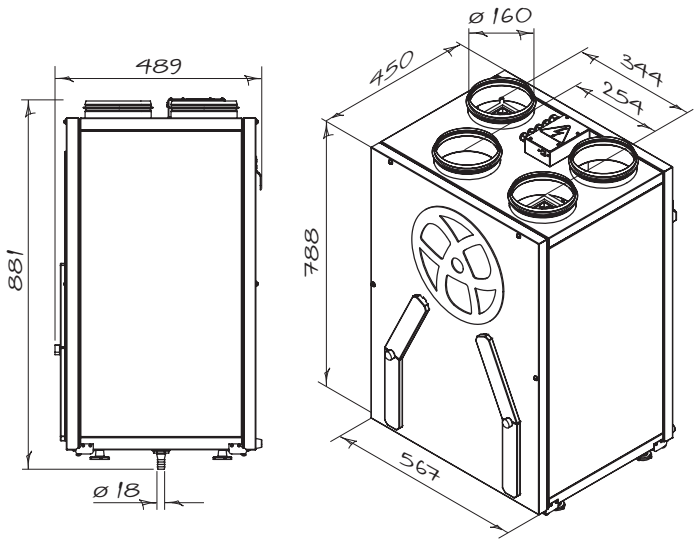

KOMFORT EC S(B)250

Mounting example

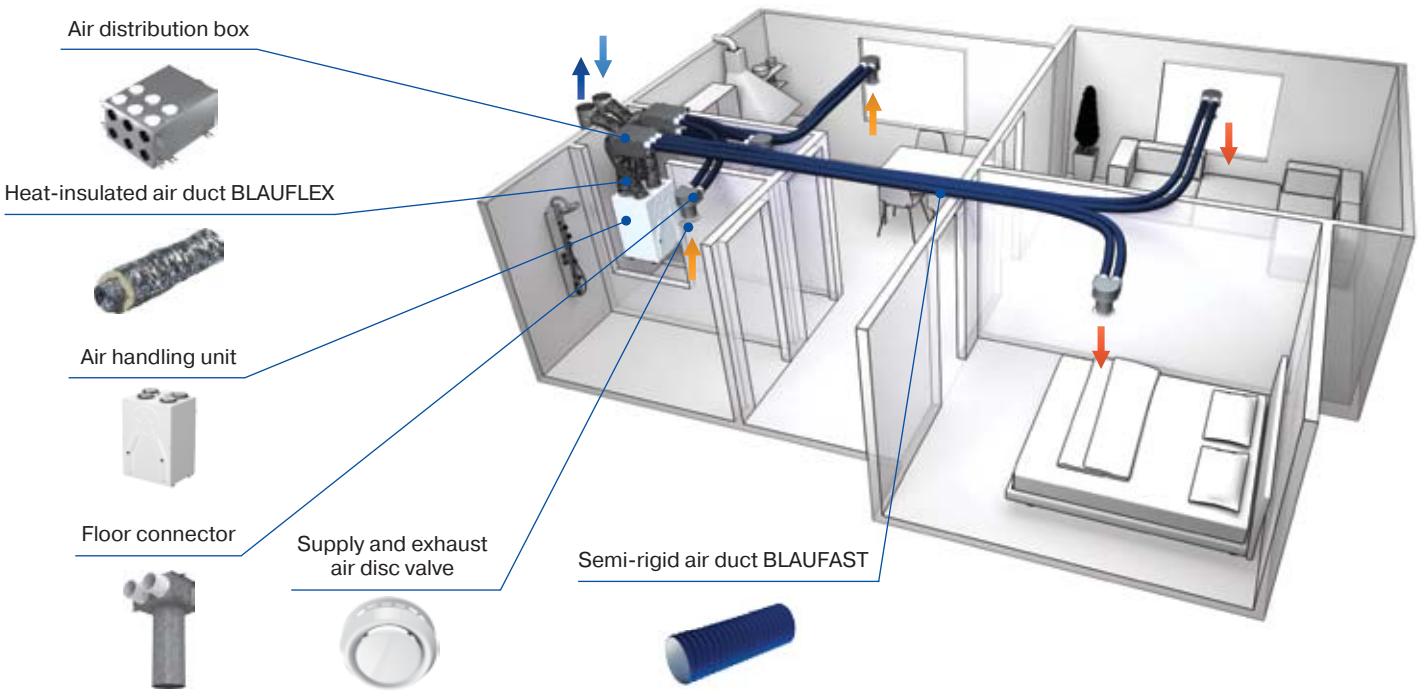

Technical data

Parameters	KOMFORT EC S200	KOMFORT EC S200-E	KOMFORT EC SB200	KOMFORT EC SB200-E
Unit supply [V / 50-60 Hz]	1~ 230		1~ 230	
Total unit power [W]	130		130	
Maximum unit current [A]	1,0		1,0	
Maximum air capacity [m^3/h]	260		260	
RPM [min^{-1}]	2050		2050	
Noise level at 3m [dB(A)]	24		24	
Transported air temperature [°C]	from -25 to +60		from -25 to +60	
Casing material	polymer coated steel		polymer coated steel	
Insulation thickness	30 mm mineral wool		30 mm mineral wool	
Extract filter	G3		G3	
Supply filter	G3		G3	
Connected air duct diameter [mm]	Ø125		Ø125	
Weight [kg]	45		45	
Heat recovery efficiency	83 up to 98 %	74 up to 94 %	83 up to 98 %	74 up to 94 %
Heat exchanger type	counter-flow		counter-flow	
Heat exchanger material	polysterene	enthalpic membrane	polysterene	enthalpic membrane
SEC class	A+	A	A+	A

Point	Unit power [W]	Total sound pressure level at 3 m [dBA]	Total sound pressure level at 1 m [dBA]
	KOMFORT EC S200(-E) KOMFORT EC SB200(-E)		
1	124	24	34
2	115	23	33
3	106	23	33
4	50	19	29
5	47	18	28
6	40	18	28
7	17	12	22
8	16	12	22
9	15	11	21

BRE

Exhaust terminal configuration	Air flow rate [l/s]	Specific fan power [W/l/s]	Heat exchange efficiency [%]
Kitchen + 1 additional wet room	21	0,67	87
Kitchen + 2 additional wet rooms	29	0,69	85
Kitchen + 3 additional wet rooms	37	0,88	84
Kitchen + 4 additional wet rooms	45	1,13	83
Kitchen + 5 additional wet rooms	53	1,37	83

Technical data

Parameters	KOMFORT EC S250	KOMFORT EC S250-E	KOMFORT EC SB250	KOMFORT EC SB250-E
Unit supply [V / 50-60 Hz]	1~ 230		1~ 230	
Total unit power [W]	101		101	
Maximum unit current [A]	0,81		0,81	
Maximum air capacity [m^3/h]	290		290	
RPM [min^{-1}]	2050		2050	
Noise level at 3m [dB(A)]	25		25	
Transported air temperature [°C]	from -25 to +60		from -25 to +60	
Casing material	polymer coated steel		polymer coated steel	
Insulation thickness	30 mm mineral wool		30 mm mineral wool	
Extract filter	G4		G4	
Supply filter	G4, F7		G4, F7	
Connected air duct diameter [mm]	Ø160		Ø160	
Weight [kg]	51		51	
Heat recovery efficiency	85 up to 94 %	77 up to 90 %	85 up to 94 %	77 up to 90 %
Heat exchanger type	counter-flow		counter-flow	
Heat exchanger material	polysterene	enthalpic membrane	polysterene	enthalpic membrane
SEC class	A+	A+	A+	A+

Point	Unit power [W]	Total sound pressure level at 3 m [dBA]	Total sound pressure level at 1 m [dBA]
	KOMFORT EC S250(-E) KOMFORT EC SB250(-E)		
1	96	25	35
2	91	24	34
3	77	24	34
4	42	20	30
5	39	19	29
6	34	19	29
7	21	13	23
8	19	12	22
9	17	12	22

BRE

Exhaust terminal configuration	Air flow rate [l/s]	Specific fan power [W/l/s]	Heat exchange efficiency [%]
Kitchen + 1 additional wet room	21	0,65	92
Kitchen + 2 additional wet rooms	29	0,68	91
Kitchen + 3 additional wet rooms	37	0,77	90
Kitchen + 4 additional wet rooms	45	0,94	89
Kitchen + 5 additional wet rooms	53	1,12	88
Kitchen + 6 additional wet rooms	61	1,35	87
Kitchen + 7 additional wet rooms	69	1,70	86

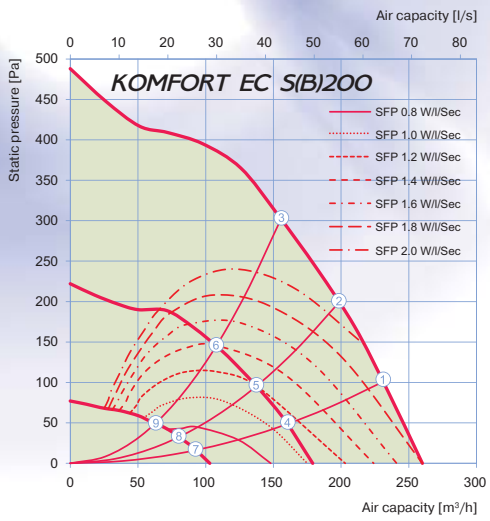

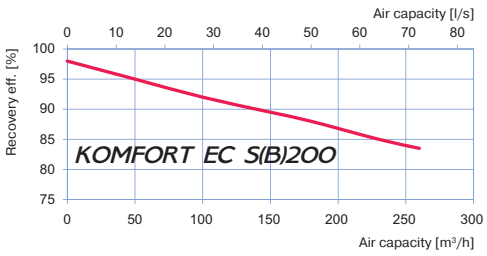

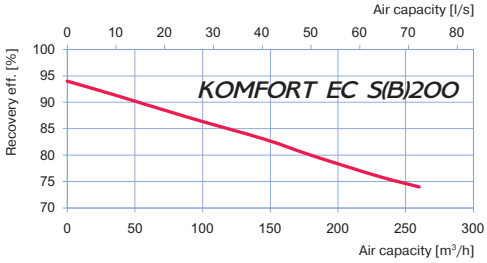

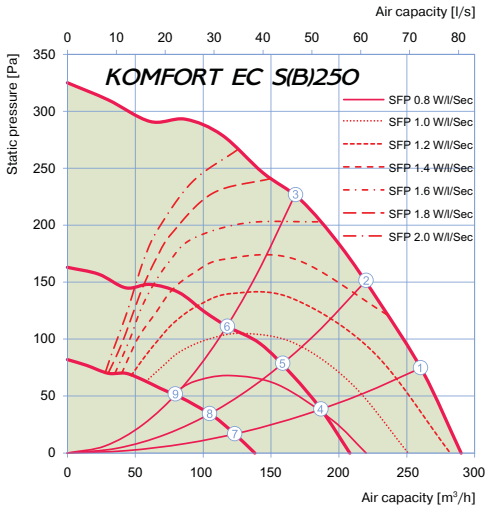

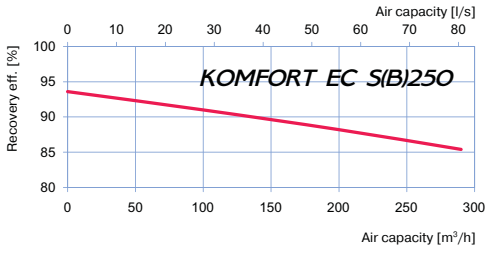

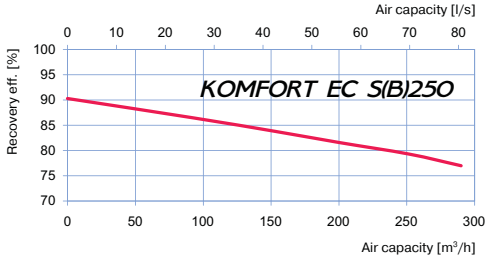

Sound pressure level, A – weighted		Octave-frequency band [Hz]									LpA, 3 m dBA	LpA, 1 m dBA
	Hz	Gen.	63	125	250	500	1000	2000	4000	8000		
LwA to supply inlet	dBA	51	28	46	49	41	35	33	36	29		
LwA to supply outlet	dBA	60	32	52	58	47	37	36	41	35		
LwA to exhaust inlet	dBA	51	27	44	49	41	35	32	34	29		
LwA to exhaust outlet	dBA	60	31	50	59	48	36	36	41	32		
LwA to environment	dBA	44	24	40	41	34	31	27	26	22	24	34

Sound pressure level, A – weighted		Octave-frequency band [Hz]									LpA, 3 m dBA	LpA, 1 m dBA
	Hz	Gen.	63	125	250	500	1000	2000	4000	8000		
LwA to supply inlet	dBA	52	28	46	50	41	36	33	36	29		
LwA to supply outlet	dBA	61	33	53	60	48	38	37	43	36		
LwA to exhaust inlet	dBA	52	28	46	50	42	36	33	35	30		
LwA to exhaust outlet	dBA	62	32	51	61	49	37	37	42	33		
LwA to environment	dBA	45	25	41	42	35	32	28	27	22	25	35

Accessories

		KOMFORT EC S200(-E) S14 KOMFORT EC SB200(-E) S14	KOMFORT EC S200(-E) S11 KOMFORT EC SB200(-E) S11	KOMFORT EC S250(-E) S14 KOMFORT EC SB250(-E) S14	KOMFORT EC S250(-E) S11 KOMFORT EC SB250(-E) S11
G3 cassette filter		FP 264x195x18 G3		-	
G4 cassette filter		-		FP 200x417x18 G4	
F7 cassette filter		-		FP 200x417x18 F7	
Internal humidity sensor		-	FS1	-	FS1
Internal humidity sensor		FS2	-	FS2	-
External CO_2 sensor		CD-1	-	CD-1	-
External CO_2 sensor with indication		CD-2	-	CD-2	-
External humidity sensor		HR-S	-	HR-S	-
Kitchen hood		DAH 251-13	-	DAH 251-13	-
Electrical preheater		-	EVH 125	-	EVH 160
Air damper		VKA 125		VKA 160	
Actuator		Belimo LF230		Belimo LF230	
Summer block		SB C6 366/240		SB C6 366/384	

Supply ventilation units

BLAUBOX E

Air capacity – up to 1520 m³/h

Application

- ❑ Ventilation units for efficient supply ventilation in various premises.
- ❑ Controllable air supply, heating and filtration.
- ❑ Compatible with Ø100 up to 315 mm round air ducts.

Design

❑ The casing is made of double-skinned aluzinc panels, internally filled with mineral wool layer of 25 mm for heat and sound insulation.

❑ The mounting brackets with anti-vibration rubber mounts on the casing bottom ensure easy installation.

❑ The spigots for connection to the air ducts are located at the side of the unit and are rubber sealed for airtight connection to the air ducts.

❑ The hinged panel of the casing ensures easy access to the internals for cleaning, filter replacement and other maintenance operations.

Fan

❑ Asynchronous external rotor motor and centrifugal impeller with backward curved blades are used for air supply.

❑ Single- or three-phase motor modification depending on the fan model type.

❑ Integrated motor overheating protection with automatic restart.

❑ Dynamically balanced impeller.

❑ Equipped with ball bearings for longer service life.

❑ Reliable and quiet operation.

Air heater

❑ The unit is equipped with an electric heater for operation during cold seasons at low outside temperature.

❑ Two integrated overheat protection thermostats, one actuated at +60 °C with automatic restart and the other one actuated at +90 °C with manual restart.

Air filtration

❑ The built-in G4 cassette filter ensures efficient filtration of supply air.

Control and automation

❑ The unit incorporates an integrated control system with a wall-mounted control panel and LCD display.

❑ The standard delivery set includes a 10 m cable for connection of the unit and the control panel.

❑ Control panel functions:

- Activating/deactivating the unit.
- Setting low, medium and high speeds for the supply fan as well as air flow control.
- Setting and maintaining supply air temperature.
- Setting day- or week-scheduled.

❑ Automation functions:

- Filter clogging control with a differential pressure switch.
- Overheating protection of the electric heating elements.
- Disabling heater activation during the fan shutoff.

❑ Set algorithms are tested when the unit is turned on and off.

Mounting

❑ The unit is suitable for indoor mounting on the floor, ceiling mounting or wall mounting with fixing brackets in any mounting position except for the vertical one with air flow downwards.

❑ The correct mounted unit must provide free access to the hinged panel for servicing and filter replacement.

Technical data

Parameters	BLAUBOX E200-1.8	BLAUBOX E300-2.4	BLAUBOX E400-2.4	BLAUBOX E400-3.4	BLAUBOX E400-5.1	BLAUBOX E400-6
Voltage [V / 50 Hz]	1~230				3~400	
Fan power [kW]	0.073	0.075	0.098			
Fan current [A]	0.32	0.33	0.43			
Electric heater capacity [kW]	1.8	2.4	2.4	3.4	5.1	6.0
Electric heater current [A]	7.8	10.4	10.4	14.8	7.4	8.7
Number of electrical heating elements	3		2		3	
Total unit power [kW]	1.873	2.475	2.498	3.498	5.198	6.098
Total unit current [A]	8.12	10.73	10.83	15.23	7.83	9.13
Maximum air capacity [m³/h]	190	285	425			
RPM	2830	2800	2705			
Sound pressure level at 3 m [dBA]	27	28	29			
Transported air temperature [°C]	-25 up to +55					
Casing material	aluzinc					
Insulation	25 mm mineral wool					
Filter	cassette G4					
Connected air duct diameter [mm]	100	125	150			
SEC class	D					
Weight [kg]	50					

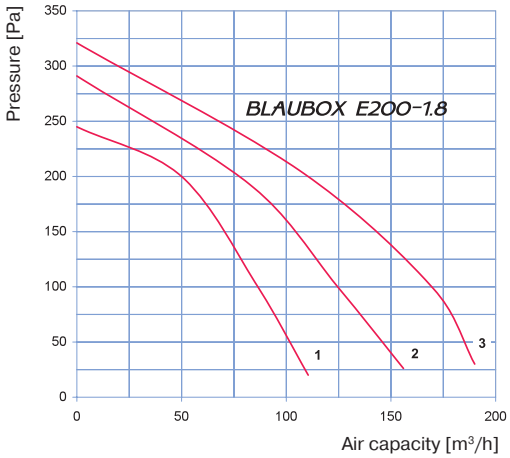

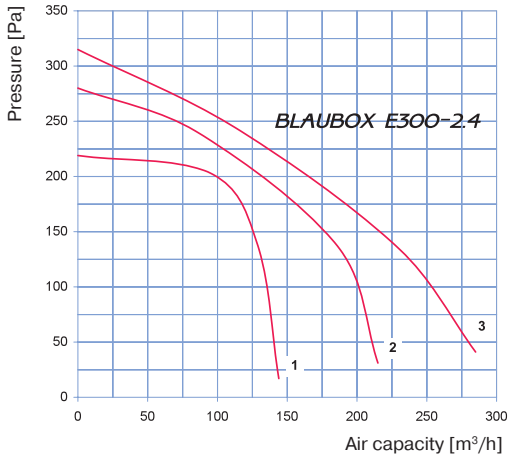

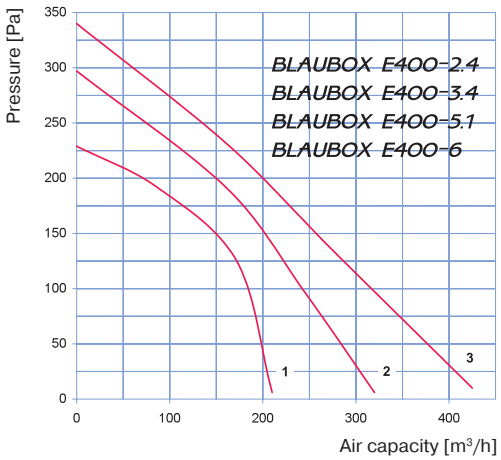

Technical data

Parameters	BLAUBOX E800-3.4	BLAUBOX E800-5.1	BLAUBOX E800-6	BLAUBOX E1000-3.6	BLAUBOX E1000-6	BLAUBOX E1000-9
Voltage [V / 50 Hz]	1~230	3~400		3~400		
Fan power [kW]	0.193			0.194		
Fan current [A]	0.84			0.85		
Electric heater capacity [kW]	3.4	5.1	6.0	3.6	6.0	9.0
Electric heater current [A]	14.8	7.4	8.7	5.3	8.7	13.0
Number of electrical heating elements	2	3		3		
Total unit power [kW]	3.593	5.293	6.193	3.794	6.194	9.194
Total unit current [A]	15.64	8.24	9.54	6.15	9.55	13.85
Maximum air capacity [m³/h]	810			990		
RPM	2780			2790		
Sound pressure level at 3 m [dBA]	30					
Transported air temperature [°C]	-25 up to +45			-25 up to +50		
Casing material	aluzinc					
Insulation	25 mm mineral wool					
Filter	cassette G4					
Connected air duct diameter [mm]	200			250		
SEC class*	C					
Weight [kg]	52					

* The EC norm 1254/2014 does not apply if maximum air capacity is >1000 m³/h

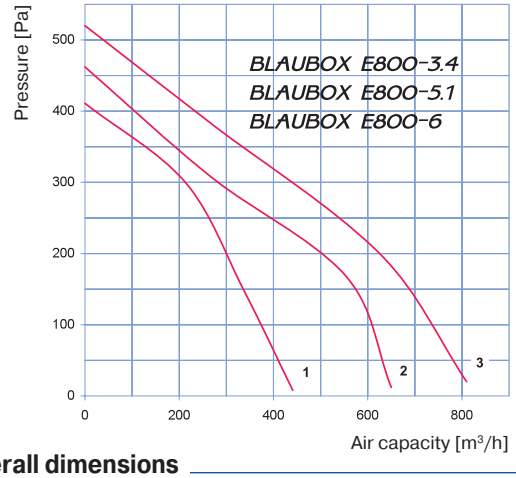

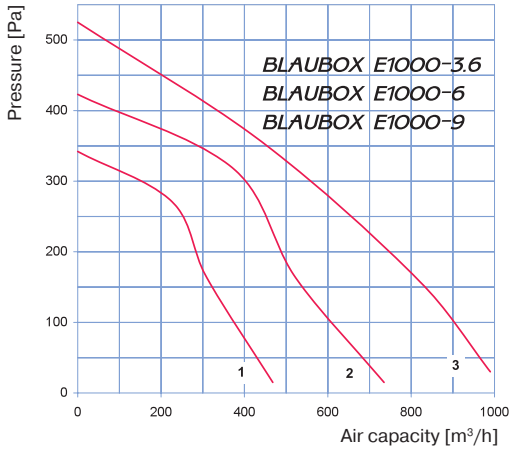

Overall dimensions

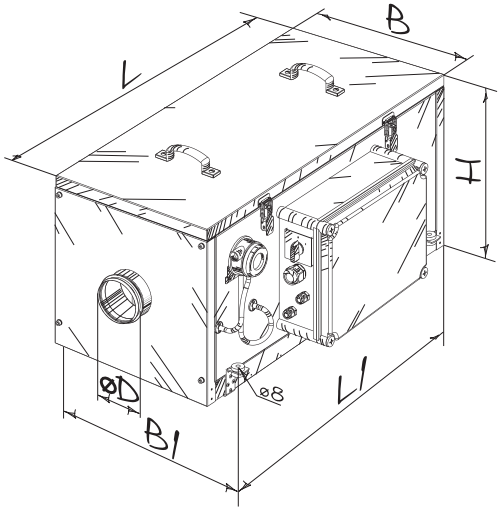

Model	Dimensions [mm]					
	D	B	B1	H	L	L1
BLAUBOX E200-1.8	99	382	421.5	408	800	647
BLAUBOX E300-2.4	124	382	421.5	408	800	647
BLAUBOX E400-2.4 BLAUBOX E400-3.4 BLAUBOX E400-5.1 BLAUBOX E400-6	149	455	496.5	438	800	647
BLAUBOX E800-3.4 BLAUBOX E800-5.1 BLAUBOX E800-6	199	487	526.5	513	835	684
BLAUBOX E1000-3.6 BLAUBOX E1000-6 BLAUBOX E1000-9	249	487	526.5	513	835	684
BLAUBOX E1200-6 BLAUBOX E1200-9 BLAUBOX E1500-6 BLAUBOX E1500-9	314	527	566.5	548	900	750

Technical data

Parameters	BLAUBOX E1200-6	BLAUBOX E1200-9	BLAUBOX E1500-6	BLAUBOX E1500-9
Voltage [V / 50 Hz]	3~400			
Fan power [kW]	171		296	
Fan current [A]	0.77		1.34	
Electric heater capacity [kW]	6.0	9.0	6.0	9.0
Electric heater current [A]	8.7	13.0	8.7	13.0
Number of electrical heating elements	3			
Total unit power [kW]	6.171	9.171	6.296	9.296
Total unit current [A]	9.47	13.77	10.04	14.34
Maximum air capacity [m³/h]	1190		1520	
RPM	2600		2720	
Sound pressure level at 3 m [dBA]	30			
Transported air temperature [°C]	-25 up to +50		-25 up to +45	
Casing material	aluzinc			
Insulation	25 mm mineral wool			
Filter	cassette G4			
Connected air duct diameter [mm]	315			
Weight [kg]	62			

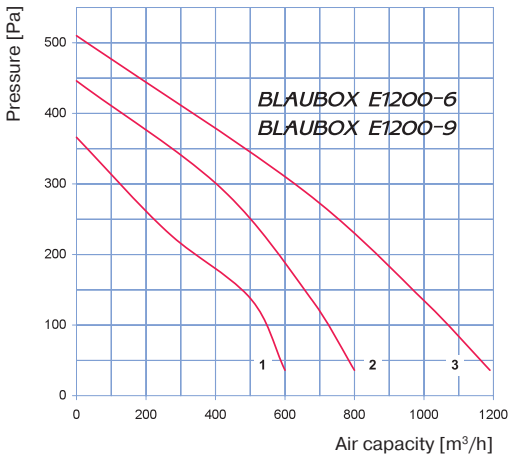

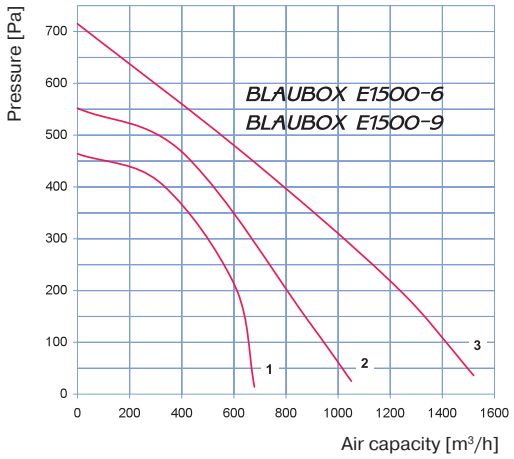

Accessories

Model	Replaceable filter G4 (cassette)
BLAUBOX E200-1.8	FP-E200-300 G4
BLAUBOX E300-2.4	
BLAUBOX E400-2.4	FP-E400 G4
BLAUBOX E400-3.4	
BLAUBOX E400-5.1	
BLAUBOX E400-6	
BLAUBOX E800-3.4	FP-E800-1000 G4
BLAUBOX E800-5.1	
BLAUBOX E800-6	
BLAUBOX E1000-3.6	
BLAUBOX E1000-6	
BLAUBOX E1000-9	
BLAUBOX E1200-6	FP-E1200-1500 G4
BLAUBOX E1200-9	
BLAUBOX E1500-6	
BLAUBOX E1500-9	

Supply ventilation units

BLAUBOX ME

Air capacity – up to 3500 m³/h

Application

- ❑ Ventilation units for efficient supply ventilation in various premises.
- ❑ Controllable air supply, heating and filtration.
- ❑ Compatible with 400x200 up to 600x350 mm rectangular air ducts.

Design

❑ The casing is made of double-skinned aluzinc panels, internally filled with mineral wool layer of 25 mm for heat- and sound-insulation.

❑ The mounting brackets with anti-vibration rubber mounts on the casing bottom ensure easy installation.

❑ The hinged panel of the casing ensures easy access to the internals for cleaning, filter replacement and other maintenance operations.

Fan

❑ Asynchronous external rotor motor and centrifugal double-inlet impeller with forward curved blades is used for air supply.

❑ Single- or three-phase motor modification depending on the fan model type.

❑ Integrated motor overheating protection with automatic restart.

❑ Dynamically balanced impeller.

❑ Equipped with ball bearings for longer service life.

❑ Reliable and quiet operation.

Air heater

❑ The unit is equipped with an electric heater for operation during cold seasons at low outside temperature.

❑ The heating elements are extra ribbed for larger heat exchange surface.

❑ Two integrated overheat protection thermostats, one actuated at +60 °C with automatic restart and the other one actuated at +90 °C with manual restart.

Air filtration

❑ The built-in G4 cassette filter ensures efficient filtration of supply air.

Control and automation

❑ The unit incorporates an integrated control system with a wall-mounted control panel and LCD display.

❑ The standard delivery set includes a 10 m cable for connection of the unit and the control panel.

❑ Control panel functions:

- Activating/deactivating the unit.
- Setting low, medium and high speeds for the supply fan as well as air flow control.
- Setting and maintaining supply air temperature.
- Setting or week-scheduled operation of the unit.

❑ Automation functions:

- Filter clogging control with a differential pressure switch.
- Overheating protection of the electric heating elements.
- Disabling heater activation during the fan shutoff.

Mounting

❑ The unit is suitable for indoor mounting on the floor, ceiling mounting or wall mounting with fixing brackets in any mounting position except for the vertical one with air flow downwards.

❑ The correct mounted unit must provide free access to the hinged panel for servicing and filter replacement.

Overall dimensions

Model	Dimensions [mm]									
	B	B1	B2	B3	H	H1	H2	L	L1	L2
BLAUBOX ME800-3.3	400	420	549	500	200	220	352	650	530	-
BLAUBOX ME1200-9.9	400	420	549	500	200	220	352	650	530	-
BLAUBOX ME2000-18	500	520	649	600	250	270	480	800	680	-
BLAUBOX ME2500-18	500	520	649	600	300	320	480	800	680	-
BLAUBOX ME3200-25.2	600	620	759	710	300	320	530	1000	880	440
BLAUBOX ME3500-25.2	600	620	759	710	350	370	530	1000	880	440

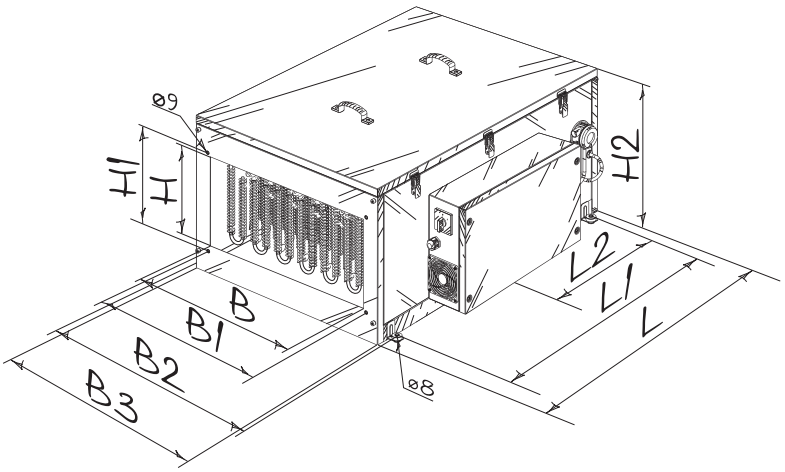

Accessories

Model	Replaceable filter G4 (cassette)
BLAUBOX ME800-3.3	FP-ME800-1200 G4
BLAUBOX ME1200-9.9	
BLAUBOX ME2000-18	FP-ME2000-2500 G4
BLAUBOX ME2500-18	
BLAUBOX ME3200-25.2	FP-ME3200-3500 G4
BLAUBOX ME3500-25.2	

Technical data

Parameters	BLAUBOX ME800-3.3	BLAUBOX ME1200-9.9	BLAUBOX ME2000-18	BLAUBOX ME2500-18
Voltage [V / 50 Hz]	1 ~ 230	3 ~ 400		
Fan power [kW]	0.245	0.41	0.49	0.65
Fan current [A]	1.08	1.8	2.15	2.84
Electric heater capacity [kW]	3.3	9.9	18.0	
Electric heater current [A]	14.3	14.3	26.0	
Total unit power [kW]	3.55	9.94	18.49	18.65
Total unit current [A]	15.38	16.1	28.15	28.84
Maximum air capacity [m^3/h]	800	1200	2000	2500
RPM	1650	1850	1100	1000
Sound pressure level at 3 m [dBA]	35	38	40	45
Transported air temperature [°C]	-25 up to +45			
Casing material	aluzinc			
Insulation	25 mm mineral wool			
Filter	cassette G4			
Connected air duct size [mm]	400x200		500x250	500x300
SEC class*	D	-	-	-
Weight [kg]	36.2	38.9	61.5	62

* The EC norm 1254/2014 does not apply if maximum air capacity is >1000 m^3/h

Parameters	BLAUBOX ME3200-25.2	BLAUBOX ME3500-25.2
Voltage [V / 50-60 Hz]	3 ~ 400Y	
Fan power [kW]	1.27	
Fan current [A]	2.3	
Electric heater capacity [kW]	25.2	
Electric heater current [A]	36.4	
Total unit power [kW]	26.47	
Total unit current [A]	38.7	
Maximum air capacity [m^3/h]	3200	3500
RPM	1200	
Sound pressure level at 3 m [dBA]	53	
Transported air temperature [°C]	-40 up to +45	
Casing material	aluzinc	
Insulation	25 mm mineral wool	
Filter	cassette G4	
Connected air duct size [mm]	600x300	600x350
Weight [kg]	69.4	69.3

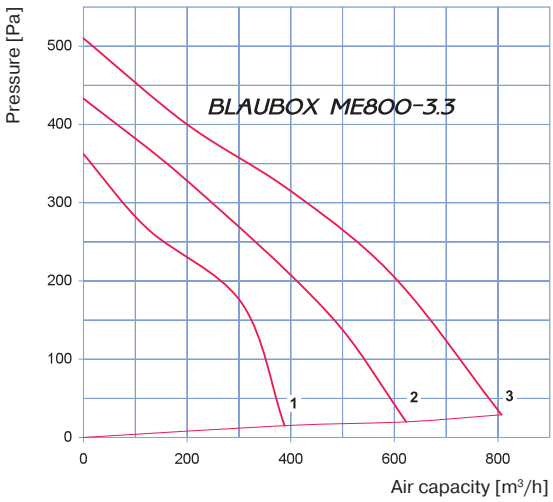
BLAUBOX ME800-3.3
Pressure [Pa]
Air capacity [m³/h]
0
100
200
300
400
500
0
200
400
600
800
1
2
3

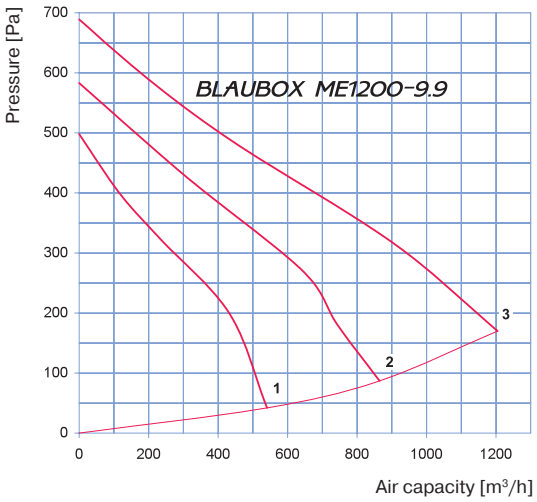
BLAUBOX ME1200-9.9
Pressure [Pa]
Air capacity [m³/h]
0
100
200
300
400
500
600
700
0
200
400
600
800
1000
1200
1
2
3

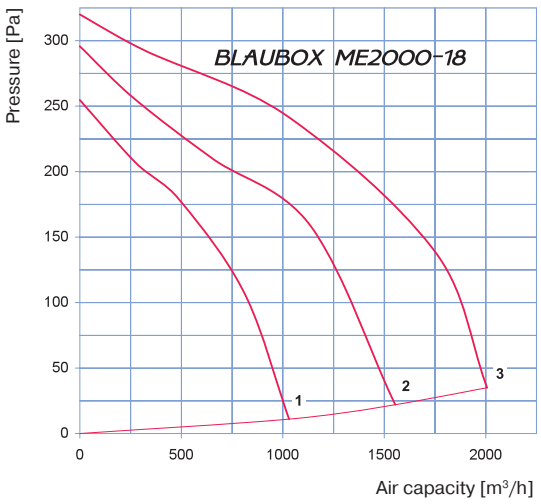
BLAUBOX ME2000-18
Pressure [Pa]
Air capacity [m³/h]
0
50
100
150
200
250
300
0
500
1000
1500
2000
1
2
3

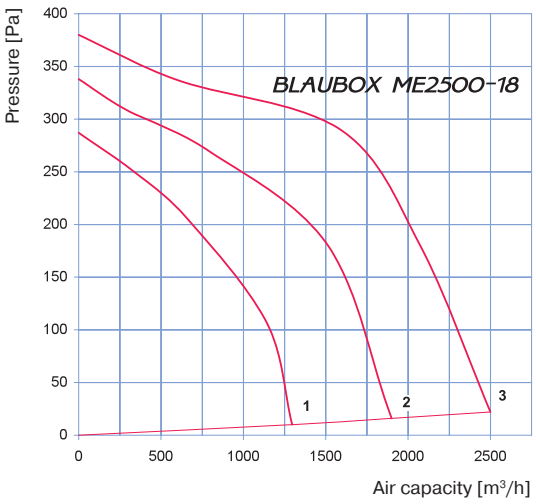
BLAUBOX ME2500-18
Pressure [Pa]
Air capacity [m³/h]
0
50
100
150
200
250
300
350
400
0
500
1000
1500
2000
2500
1
2
3

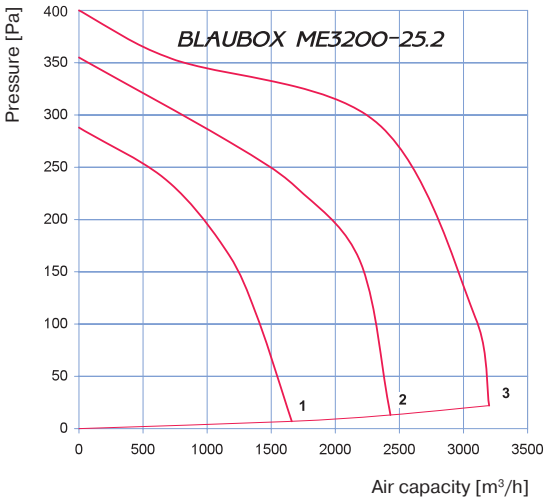
BLAUBOX ME3200-25.2
Pressure [Pa]
Air capacity [m³/h]
0
50
100
150
200
250
300
350
400
0
500
1000
1500
2000
2500
3000
3500
1
2
3

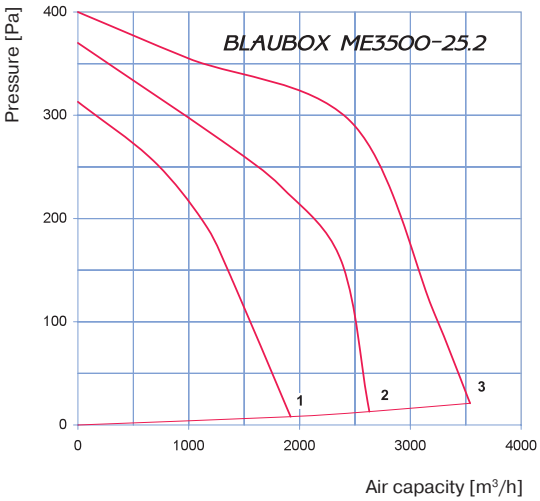
BLAUBOX ME3500-25.2
Pressure [Pa]
Air capacity [m³/h]
0
100
200
300
400
0
1000
2000
3000
4000
1
2
3

EVH

electric duct heater for heat exchanger protection

Application

❑ Heat exchanger freeze protection by means of preheating of the intake air.
❑ Maintains the duct air temperature at a point that prevents the heat exchanger freezing.
❑ Compatible with Ø125 up to 200 mm air ducts.

Design

❑ The casing is internally filled with 20 mm layer of non-flammable mineral wool.
❑ The casing and the junction box are made of galvanized steel.
❑ Heating elements are made of stainless steel.
❑ Airtight connection to air ducts due to rubber seals.

Control

❑ Equipped with a power cable.
❑ The signal cable for connection to the controller of the air handling unit.
❑ Equipped with a triac power regulator.
Regulation is carried out via switching-on and switching-off the full load. Load commutation is carried out by the semiconductor device (triac). The switching unit has no wearing mechanical elements.
❑ Equipped with overheat thermostats:
– main protection with automatic restart at +50 °C;
– emergency protection with manual restart at +90 °C.

Mounting

❑ Fixation to round air ducts by means of clamps (included in the delivery).
❑ In case of horizontal mounting position the control box cover must be directed upwards only. Permitted deviation up to 90°. The control box cover may not be positioned downwards!

Overall dimensions

Model	ØD	B	H	L1	L	Weight [kg]
EVH 125-0.6-1	124	155	251	306	190	2.1
EVH 125-0.8-1						
EVH 160-1.2-1	159	175	293	306	190	2.5
EVH 160-1.7-1						
EVH 160-2.0-1						
EVH 200-1.2-1	199	195	337	306	190	2.8
EVH 200-1.7-1						
EVH 200-2.0-1						

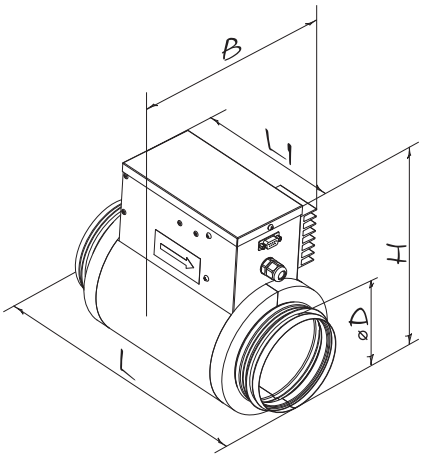

Compatibility chart

Heater model (connected air duct diameter)	Unit model
EVH 125	KOMFORT EC S160 S11
	KOMFORT EC DB160 S11
EVH 160	KOMFORT EC DB350 S11
	KOMFORT EC SB350 S11
EVH 200	KOMFORT EC SB550 S11

Heater capacity selection diagram

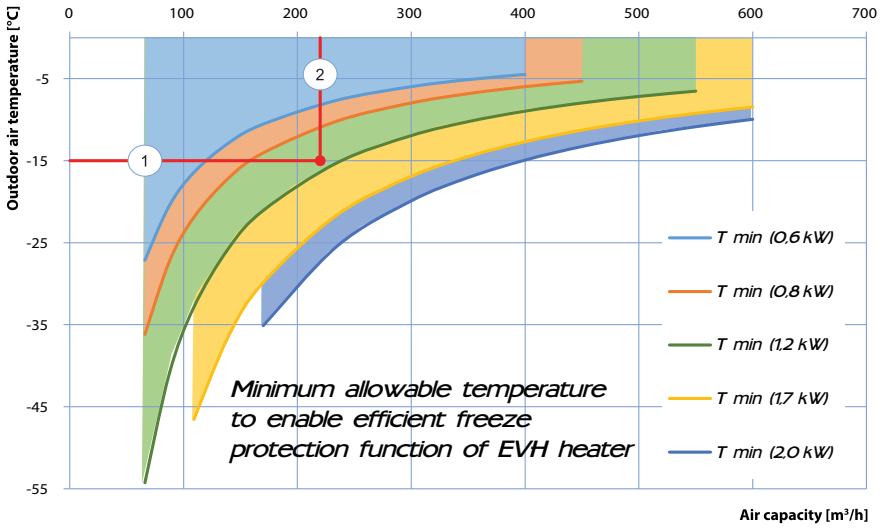

EVH heater parameters calculation example:

- It is necessary to select EVH freeze protection heater for the KOMFORT EC SB350 A14 unit. Design outdoor air temperature in cold season is -15 °C. Design capacity is 220 m³/h.
- Identify the interception point of the air flow line (1) with the outdoor temperature line (2). In this case the heater with the capacity of 1200 W will assure efficient freeze protection of the heat exchanger. Select the EVH 160-1.2-1 heater with the diameter corresponding to the diameter of the spigot of the KOMFORT EC SB350 A14 unit.

Technical data

Model	Min. air capacity [m³/h]	Power [kW]	Current [A]
EVH 125-0.6-1	66	0.6	2.6
EVH 125-0.8-1		0.8	3.5
EVH 160-1.2-1	109	1.2	5.2
EVH 160-1.7-1		1.7	7.4
EVH 160-2.0-1		2.0	8.7
EVH 200-1.2-1	170	1.2	5.2
EVH 200-1.7-1		1.7	7.4
EVH 200-2.0-1		2.0	8.7

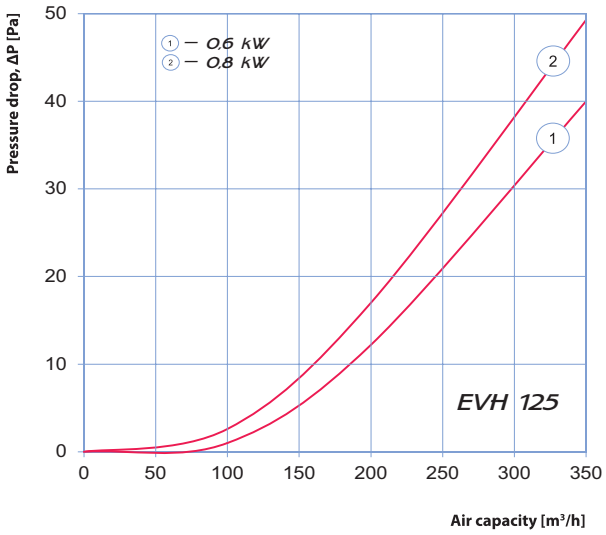

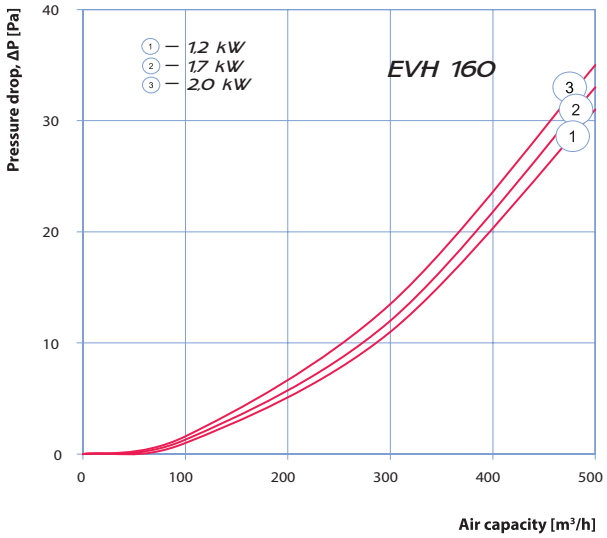

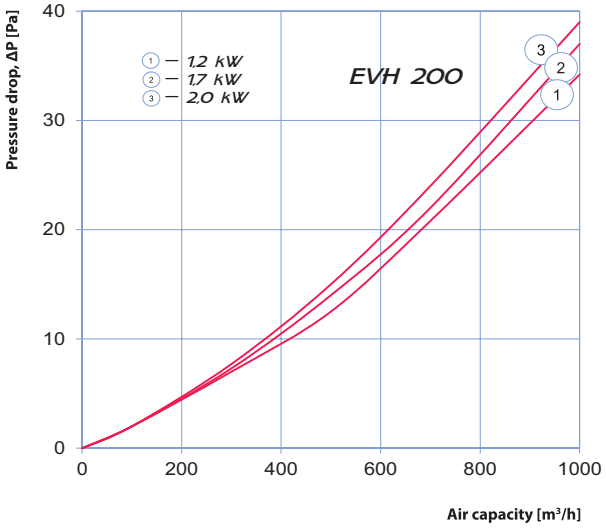

Duct electrical heaters

EKH

for round ducts

Application

- For warming up of supply air in heating, ventilation and air conditioning systems installed in various premises.
- Compatible with Ø100 to 315 mm round air ducts.

Design

- Galvanized steel case and junction box.
- Heating elements made of stainless steel.
- Airtight connection with air ducts due to rubber seals.
- Several power options for each standard size.
- For higher heating capacity several heaters may be installed in series.
- Equipped with overheat protection thermostats:

– basic protection with automatic restart at +50 ^{0}C;
– emergency protection with manual restart at +90 ^{0}C.

Mounting

- Fixing to round ducts with clamps.
- Any mounting position except for the junction box downwards to prevent condensate leakage and short circuit.
- Install a filter upstream to the heater to protect heating elements against dirt ingress.
- Recommended distance between the heater and other system components must be not less than two connecting diameters for air flow stabilization.
- Duct heaters are rated for minimum air flow speed 1.5 m/s and maximum air temperature supplied to the units 40 °C. In case of speed regulation with a speed controller the minimum air speed through the heater must be provided.
- For correct and safe heater operation an automatic control and protection system is recommended including the following functions:

– regulation of the heating capacity and temperature of the air heated up;
– filter clogging control by a differential air pressure sensor;
– power cut-off in case of supply fan shutdown or low air flow speed as well as in case of actuating the overheat protection thermostats;
– heat removal from the heating elements after ventilation system shutdown.

Air temperature increase as a function of air capacity

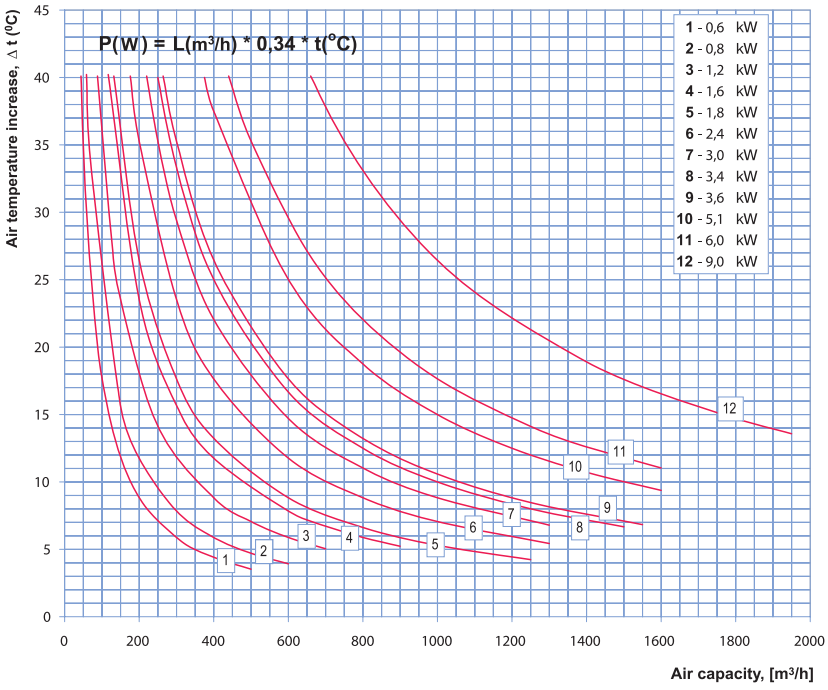

Technical data

Model	Minimum air capacity [m³/h]	Current[A]	Voltage [V]	Power [kW]	Number of heating coils x capacity [kW]	Phase
EKH 100-0.6	60	2.6	230	0.6	1x0.6	1
EKH 100-0.8	80	3.5	230	0.8	1x0.8	1
EKH 100-1.2	90	5.2	230	1.2	2x0.6	1
EKH 100-1.6	120	7.0	230	1.6	2x0.8	1
EKH 100-1.8	130	7.8	230	1.8	3x0.6	1
EKH 125-0.6	60	2.6	230	0.6	1x0.6	1
EKH 125-0.8	80	3.5	230	0.8	1x0.8	1
EKH 125-1.2	90	5.2	230	1.2	2x0.6	1
EKH 125-1.6	120	7.0	230	1.6	2x0.8	1
EKH 125-2.4	150	7.8	230	2.4	3x0.8	1
EKH 150-1.2	120	5.2	230	1.2	1x1.2	1
EKH 150-2.4	150	10.4	230	2.4	2x1.2	1
EKH 150-3.4	220	14.7	230	3.4	2x1.7	1
EKH 150-3.6	265	5.2	400	3.6	3x1.2	3
EKH 150-5.1	320	7.4	400	5.1	3x1.7	3
EKH 150-6	360	8.7	400	6.0	3x2.0	3
EKH 160-1.2	150	5.2	230	1.2	1x1.2	1
EKH 160-2.4	180	10.4	230	2.4	2x1.2	1
EKH 160-3.4	250	14.8	230	3.4	2x1.7	1
EKH 160-3.6	265	5.2	400	3.6	3x1.2	3
EKH 160-5.1	375	7.4	400	5.1	3x1.7	3
EKH 160-6	440	8.7	400	6.0	3x2.0	3
EKH 200-1.2	150	5.2	230	1.2	1x1.2	1
EKH 200-2.4	180	10.4	230	2.4	2x1.2	1
EKH 200-3.4	250	14.8	230	3.4	2x1.7	1
EKH 200-3.6	265	5.2	400	3.6	3x1.2	3
EKH 200-5.1	375	7.4	400	5.1	3x1.7	3
EKH 200-6	440	8.7	400	6.0	3x2.0	3
EKH 250-1.2	180	5.2	230	1.2	1x1.2	1
EKH 250-2.4	265	10.4	230	2.4	2x1.2	1
EKH 250-3	375	13.0	230	3.0	1x3.0	1
EKH 250-3.6	375	5.2	400	3.6	3x1.2	3
EKH 250-6	440	8.7	400	6.0	3x2.0	3
EKH 250-9	660	13.0	400	9.0	3x3.0	3
EKH 315-1.2	180	5.2	230	1.2	1x1.2	1
EKH 315-2.4	265	10.4	230	2.4	2x1.2	1
EKH 315-3.6	375	5.2	400	3.6	3x1.2	3
EKH 315-6	440	8.7	400	6.0	3x2.0	3
EKH 315-9	660	13.0	400	9.0	3x3.0	3

Specifications

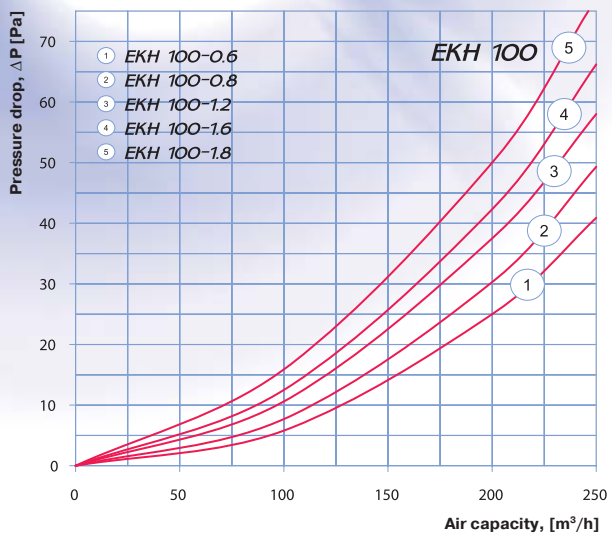

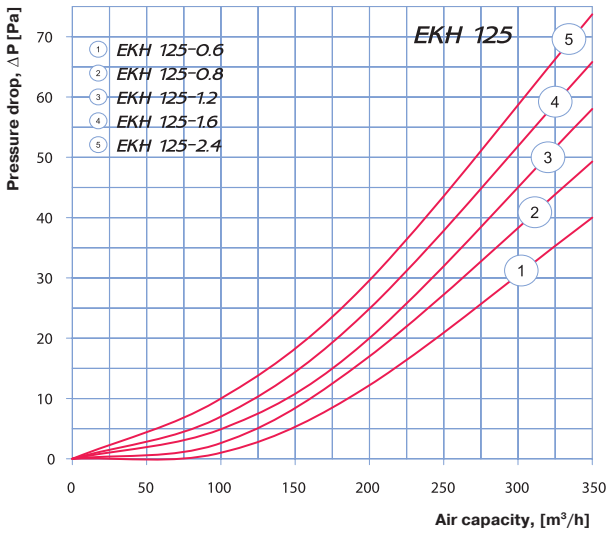

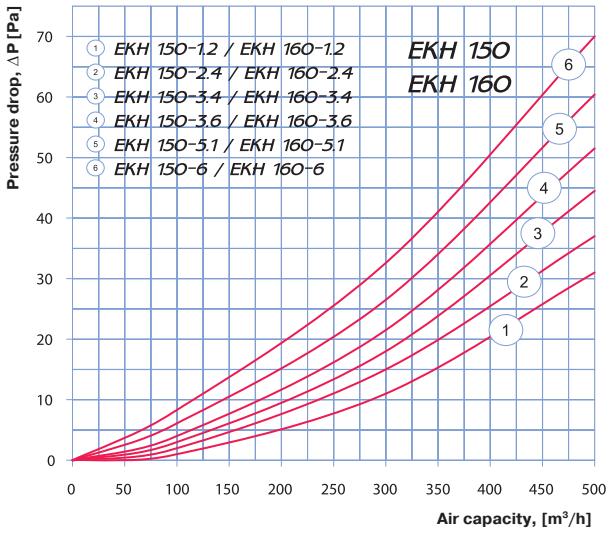

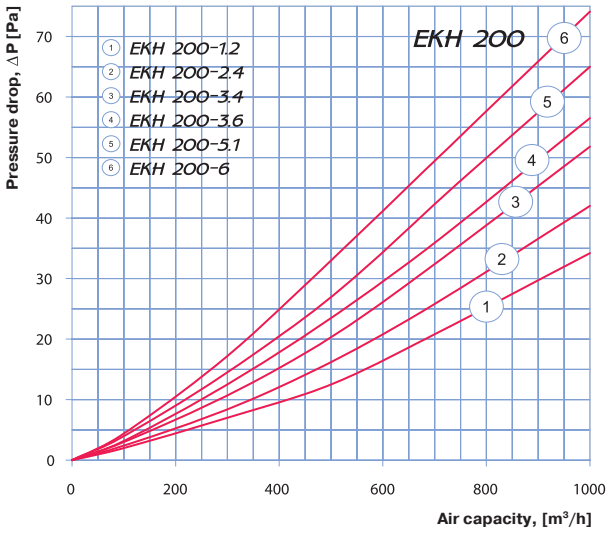

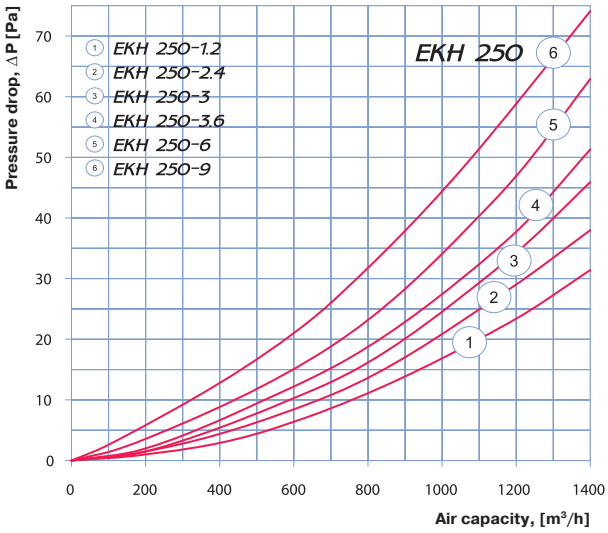

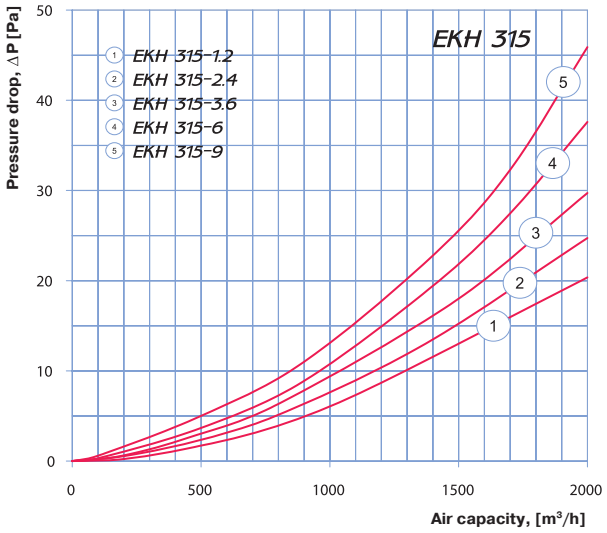

Overall dimensions

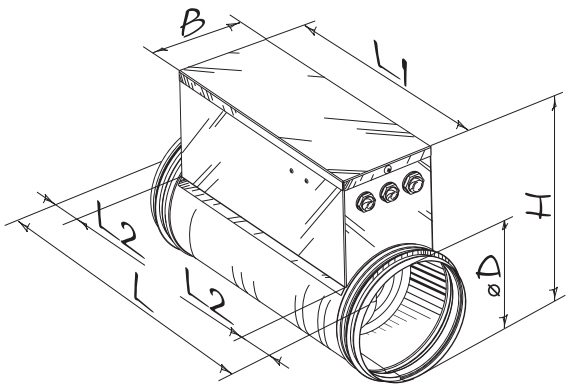

Type	Dimensions [mm]						Weight [kg]
	ØD	B	H	L	L1	L2	
EKH 100-0.6	99	94	207	306	226	40	2.6
EKH 100-0.8	99	94	207	306	226	40	2.6
EKH 100-1.2	99	94	207	306	226	40	2.9
EKH 100-1.6	99	94	207	306	226	40	2.9
EKH 100-1.8	99	94	207	376	296	40	3.1
EKH 125-0.6	124	103	230	306	226	40	2.4
EKH 125-0.8	124	103	230	306	226	40	2.4
EKH 125-1.2	124	103	230	306	226	40	2.7
EKH 125-1.6	124	103	230	306	226	40	2.7
EKH 125-2.4	124	103	230	376	296	40	3.0
EKH 150-1.2	149	120	255	306	226	40	2.5
EKH 150-2.4	149	120	255	306	226	40	3.1
EKH 150-3.4	149	120	255	306	226	40	3.1
EKH 150-3.6	149	120	255	376	296	40	4.1
EKH 150-5.1	149	120	255	376	296	40	4.1
EKH 150-6	149	120	255	376	296	40	4.1
EKH 160-1.2	159	120	267	306	226	40	2.1
EKH 160-2.4	159	120	267	306	226	40	2.9
EKH 160-3.4	159	120	267	306	226	40	3.2
EKH 160-3.6	159	120	267	376	296	40	3.9
EKH 160-5.1	159	120	267	376	296	40	3.9
EKH 160-6	159	120	267	376	296	40	3.9
EKH 200-1.2	199	150	302	294	214	40	2.4
EKH 200-2.4	199	150	302	294	214	40	3.2
EKH 200-3.4	199	150	302	294	214	40	3.3
EKH 200-3.6	199	150	302	376	296	40	4.1
EKH 200-5.1	199	150	302	376	296	40	4.1
EKH 200-6	199	150	302	376	296	40	4.1
EKH 250-1.2	249	150	356	306	226	40	2.4
EKH 250-2.4	249	150	356	306	226	40	2.6
EKH 250-3	249	150	356	306	226	40	2.4
EKH 250-3.6	249	150	356	376	296	40	2.9
EKH 250-6	249	150	356	376	296	40	2.9
EKH 250-9	249	150	356	376	296	40	2.9
EKH 315-1.2	313	150	425	294	214	40	2.6
EKH 315-2.4	313	150	425	294	214	40	2.8
EKH 315-3.6	313	150	425	376	296	40	3.1
EKH 315-6	313	150	425	376	296	40	3.1
EKH 315-9	313	150	425	376	296	40	3.1

Duct water heaters

WKH

for round ducts

Application

- For warming up of supply air in ventilation systems installed in various premises.
- Suitable for installation in supply or air handling units to warm up the supply air flow.
- For indoor use only if water serves as a heat carrier.
- For outdoor application use antifreezing mixture (ethylene glycol solution).
- Compatible with Ø100 to 315 mm round air ducts.

Design

- Galvanized steel case.
- Copper pipe manifold.
- Heat exchange surface made of aluminium plates.
- Airtight connection with air ducts due to rubber seals.
- Equipped with a nipple for the system deaeration.
- Outlet header is equipped with a spigot for installation of an immersion temperature sensor or freezing protection mechanism.
- Available in two- or four-row tube modifications.
- Suitable for operation at maximum operating pressure 1.6 MPa (16 bar) and maximum operating temperature +100 ^{0}C.

Mounting

- Fixing to round ducts with clamps.
- Any mounting position that ensures the heater deaeration.
- Install a filter upstream to the heater to protect heating elements against dirt ingress.
- Install the heater in front or behind the fan. In case of mounting behind the fan ensure a distance of not less than two connecting diameters for air flow stabilization and keep the maximum permissible air temperature inside the fan.
- Connect the heater on counter-flow basis, otherwise its capacity drops by 5-15 %. All the nomographic charts are rated for counter-flow connection.
- For correct and safe heater operation an automatic control and protection system is recommended, including the following functions:

– regulation of the heating capacity and temperature of the air heated up;
– filter clogging control by a differential air pressure sensor;
– ventilation system start-up with pre-heated heater;
– use of air dampers fitted with a spring return actuator;
– fan turns off in case of freezing danger for the heater.

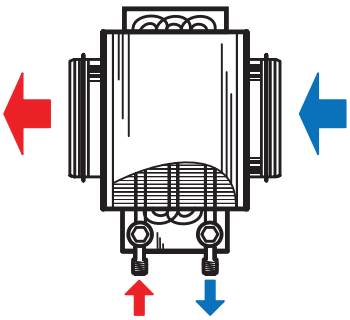

Connection against air flow

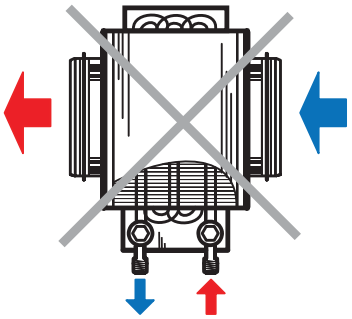

Connection along air flow

Overall dimensions

Model	Dimensions [mm]									Number of water coil rows	Weight [kg]
	ØD	B	H	H3	L	L1	L2	L3	K		
WKH 100-2	99	350	230	150	300	32	43	220	G 3/4”	2	3.9
WKH 100-4	99	350	230	150	300	28	65	220	G 3/4”	4	5.2
WKH 125-2	124	350	230	150	300	32	43	220	G 3/4”	2	4.0
WKH 125-4	124	350	230	150	300	28	65	220	G 3/4”	4	5.3
WKH 150-2	149	400	280	200	300	32	43	220	G 3/4”	2	7.5
WKH 150-4	149	400	280	200	300	28	65	220	G 3/4”	4	8.2
WKH 160-2	159	400	280	200	300	32	43	220	G 3/4”	2	7.5
WKH 160-4	159	400	280	200	300	28	65	220	G 3/4”	4	8.2
WKH 200-2	198	400	280	200	300	32	43	220	G 3/4”	2	7.5
WKH 200-4	198	400	280	200	300	28	65	220	G 3/4”	4	8.2
WKH 250-2	248	470	350	270	350	32	43	270	G 1”	2	10.3
WKH 250-4	248	470	350	270	350	28	65	270	G 1”	4	10.8
WKH 315-2	313	550	430	350	450	57	43	370	G 1”	2	12.6
WKH 315-4	313	550	430	350	450	53	65	370	G 1”	4	13.4

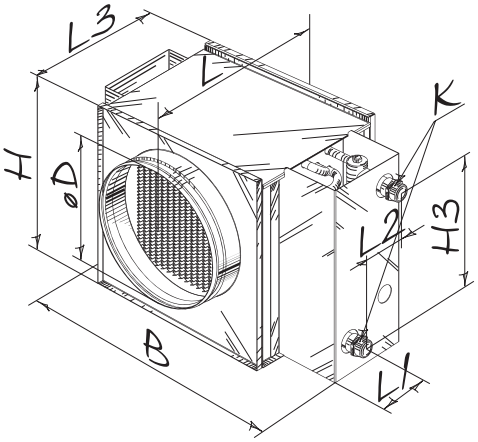

Air pressure loss for water heaters WKH

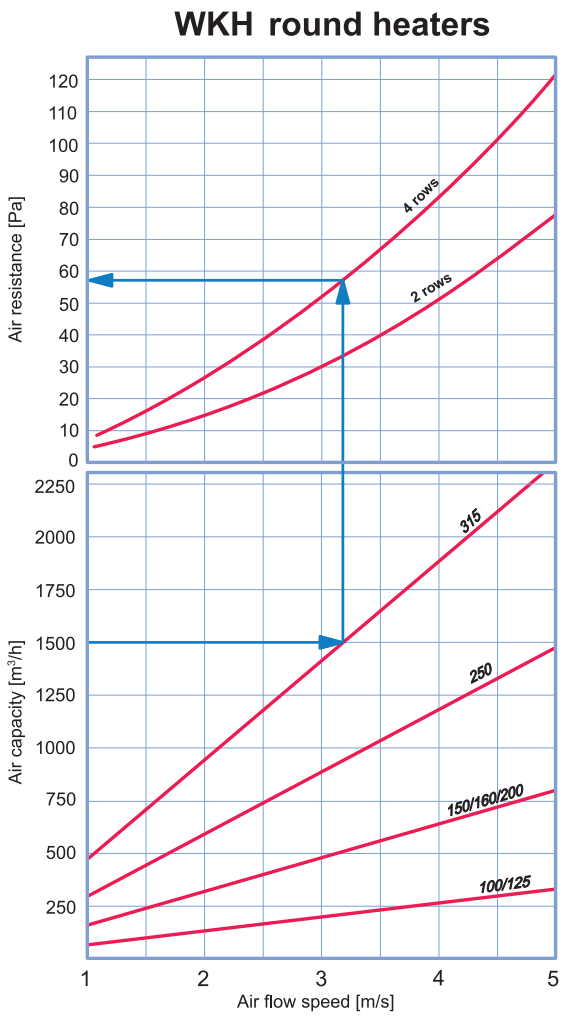

Water heaters calculation diagram

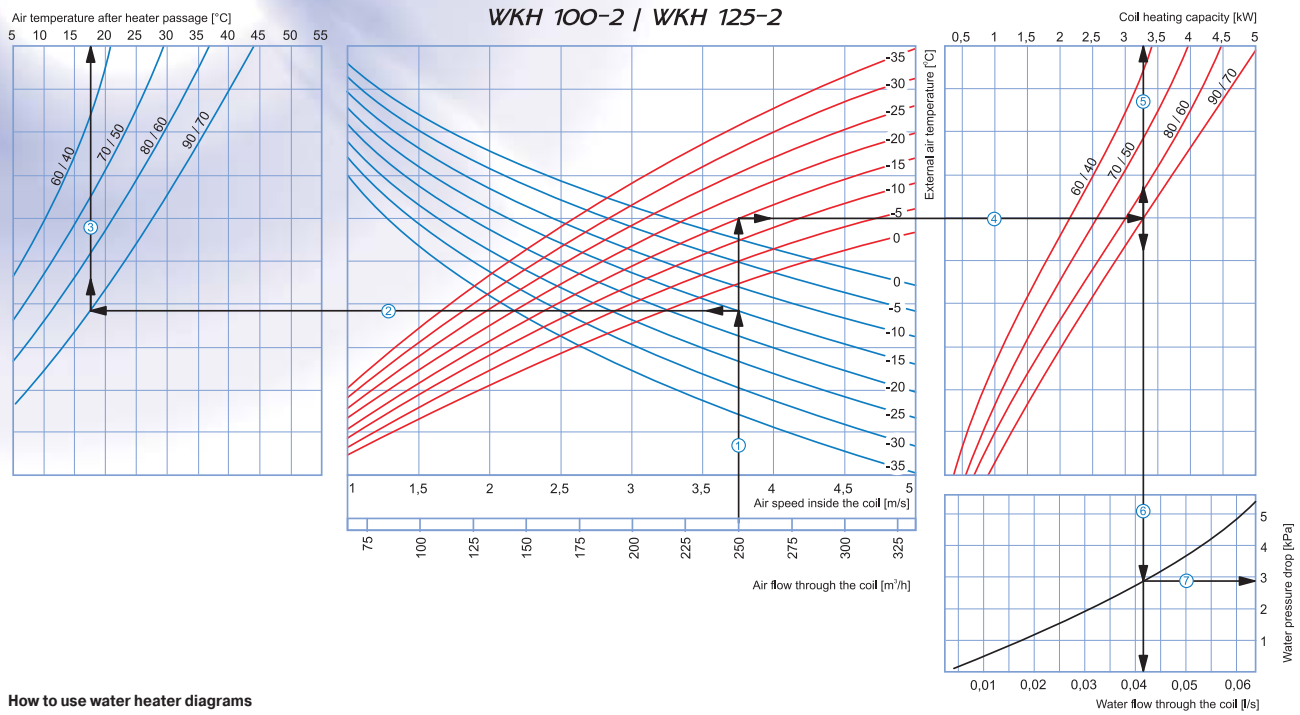

How to use water heater diagrams

System Parameters: Air flow = 250 m³/h. Outside air temperature =-15°C. Water temperature (in/out) = 90/70 °C.

- **Air Speed inside coil:** Starting from 250 m³/h on the air flow scale draw a vertical line ①. This line crosses the air speed axis and shows a value of about 3.75 m/s.
- **Supply air temperature:** Prolong the line ① up to the point where it crosses the outside air temperature (blue curve, e.g. -15°C); then draw a horizontal line ② from this point to the left until it crosses the water in/out temperature curve (e.g. 90/70 °C). From this point draw a vertical line ③ to the supply air temperature axis on top of the graphic (+17.5°C).
- **Heating coil capacity:** Prolong the line ① up to the point where it crosses the outside air temperature (e.g. -15°C, red curve) and draw a horizontal line ④ from this point to the right until it crosses the water in/out temperature curve (e.g., 90/70 °C). From here draw a vertical line ⑤ up to the scale representing the heating coil capacity (3.25 kW).
- **Water flow:** Prolong the line ⑤ down to the water flow axis ⑥ at the bottom of the graphic (0.042 l/s).
- **Water pressure drop:** Draw the line ⑦ from the point where the line ⑥ crosses the black curve to the pressure drop axis (2.9 kPa).

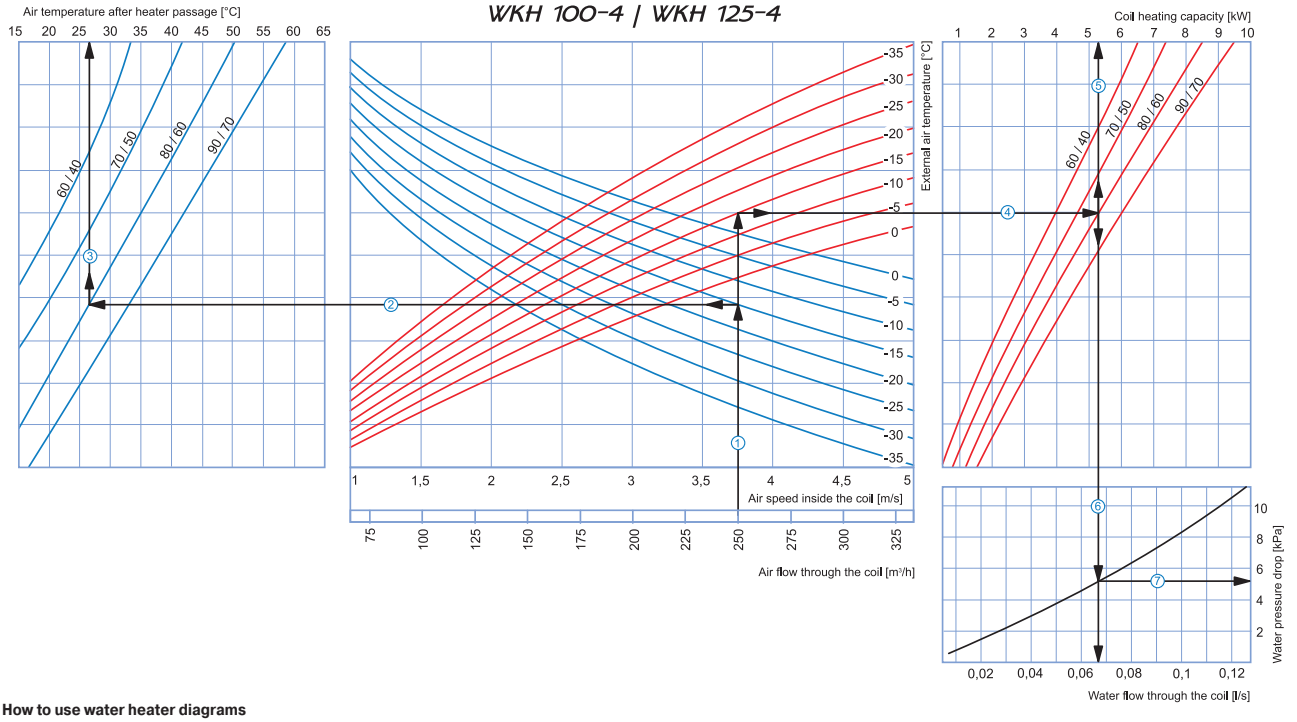

How to use water heater diagrams

System Parameters: Air flow = 250 m³/h. Outside air temperature =-15°C. Water temperature (in/out) = 80/60 °C.

- **Air Speed inside coil:** Starting from 250 m³/h on the air flow scale draw a vertical line ①. This line crosses the air speed axis and shows a value of about 3.75 m/s.
- **Supply air temperature:** Prolong the line ① up to the point where it crosses the outside air temperature (blue curve, e.g. -15°C); then draw a horizontal line ② from this point to the left until it crosses the water in/out temperature curve (e.g. 80/60 °C). From this point draw a vertical line ③ to the supply air temperature axis on top of the graphic (+27°C).
- **Heating coil capacity:** Prolong the line ① up to the point where it crosses the outside air temperature (e.g. -15°C, red curve) and draw a horizontal line ④ from this point to the right until it crosses the water in/out temperature curve (e.g., 80/60 °C). From here draw a vertical line ⑤ up to the scale representing the heating coil capacity (5.2 kW).
- **Water flow:** Prolong the line ⑤ down to the water flow axis ⑥ at the bottom of the graphic (0.067 l/s).
- **Water pressure drop:** Draw the line ⑦ from the point where the line ⑥ crosses the black curve to the pressure drop axis (5.2 kPa).

Water heaters calculation diagram

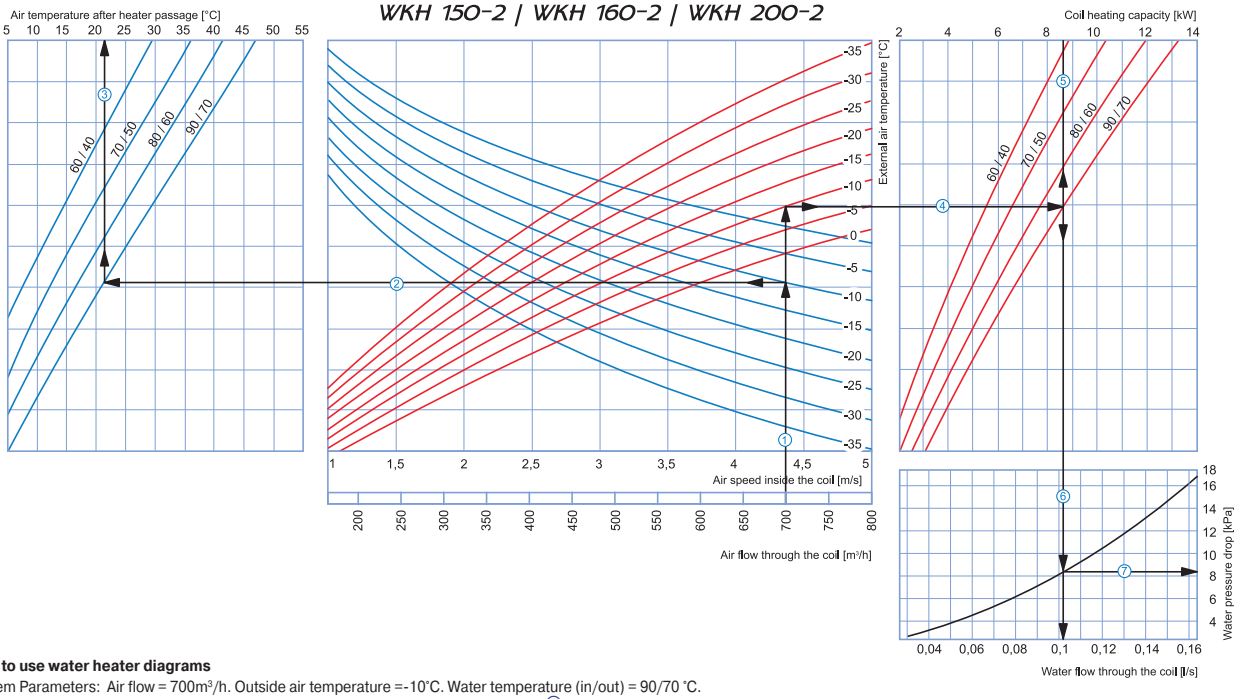

How to use water heater diagrams

System Parameters: Air flow = 700m³/h. Outside air temperature =-10°C. Water temperature (in/out) = 90/70 °C.

- **Air Speed inside coil:** Starting from 700 m³/h on the air flow scale draw a vertical line ①. This line crosses the air speed axis and shows a value of about 4.4 m/s.
- **Supply air temperature:** Prolong the line ① up to the point where it crosses the outside air temperature (blue curve, e.g. -10°C); then draw a horizontal line ② from this point to the left until it crosses the water in/out temperature curve (e.g. 90/70 °C). From this point draw a vertical line ③ to the supply air temperature axis on top of the graphic (+21°C).
- **Heating coil capacity:** Prolong the line ① up to the point where it crosses the outside air temperature (e.g. -10°C, red curve) and draw a horizontal line ④ from this point to the right until it crosses the water in/out temperature curve (e.g., 90/70 °C). From here draw a vertical line ⑤ up to the scale representing the heating coil capacity (8.6 kW).
- **Water flow:** Prolong the line ⑤ down to the water flow axis ⑥ at the bottom of the graphic (0.11 l/s).
- **Water pressure drop:** Draw the line ⑦ from the point where the line ⑥ crosses the black curve to the pressure drop axis (8.2 kPa).

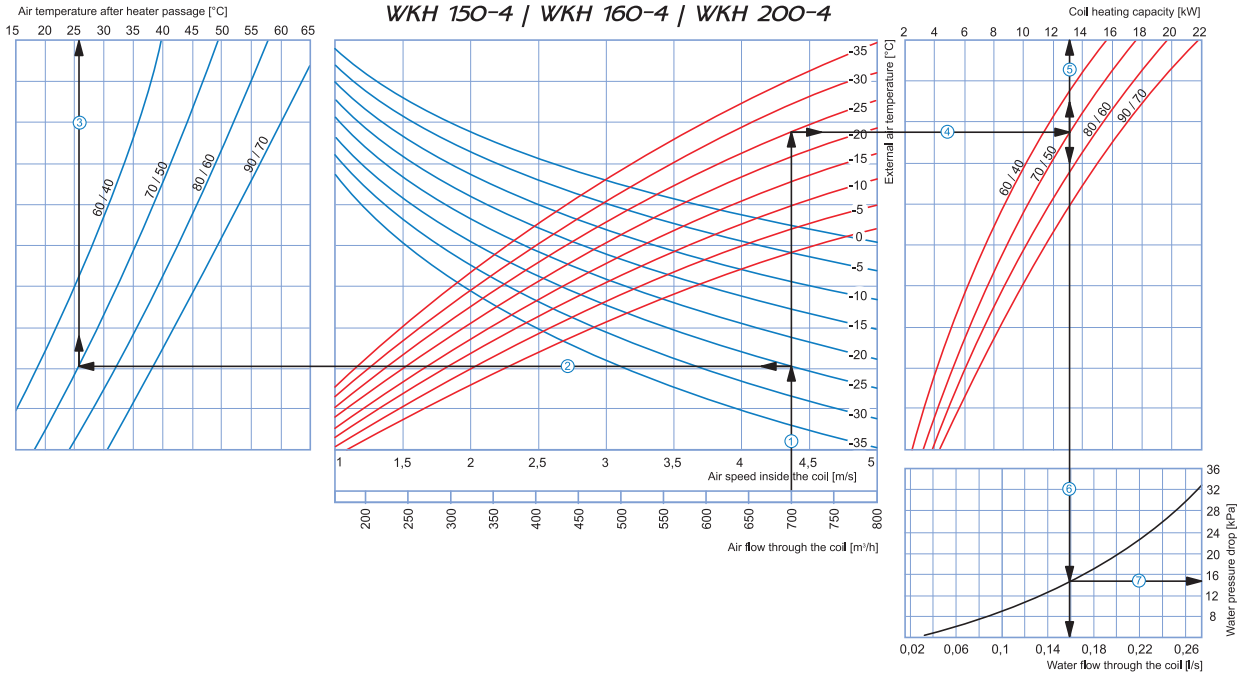

How to use water heater diagrams

System Parameters: Air flow = 700 m³/h. Outside air temperature =-25°C. Water temperature (in/out) = 70/50 °C.

- **Air Speed inside coil:** Starting from 700 m³/h on the air flow scale draw a vertical line ①. This line crosses the air speed axis and shows a value of about 4.4 m/s.
- **Supply air temperature:** Prolong the line ① up to the point where it crosses the outside air temperature (blue curve, e.g. -25°C); then draw a horizontal line ② from this point to the left until it crosses the water in/out temperature curve (e.g. 70/50 °C). From this point draw a vertical line ③ to the supply air temperature axis on top of the graphic (+26°C).
- **Heating coil capacity:** Prolong the line ① up to the point where it crosses the outside air temperature (e.g. -25°C, red curve) and draw a horizontal line ④ from this point to the right until it crosses the water in/out temperature curve (e.g., 70/50 °C). From here draw a vertical line ⑤ up to the scale representing the heating coil capacity (13.0 kW).
- **Water flow:** Prolong the line ⑤ down to the water flow axis ⑥ at the bottom of the graphic (0.16 l/s).
- **Water pressure drop:** Draw the line ⑦ from the point where the line ⑥ crosses the black curve to the pressure drop axis (15 kPa).

Water heaters calculation diagram

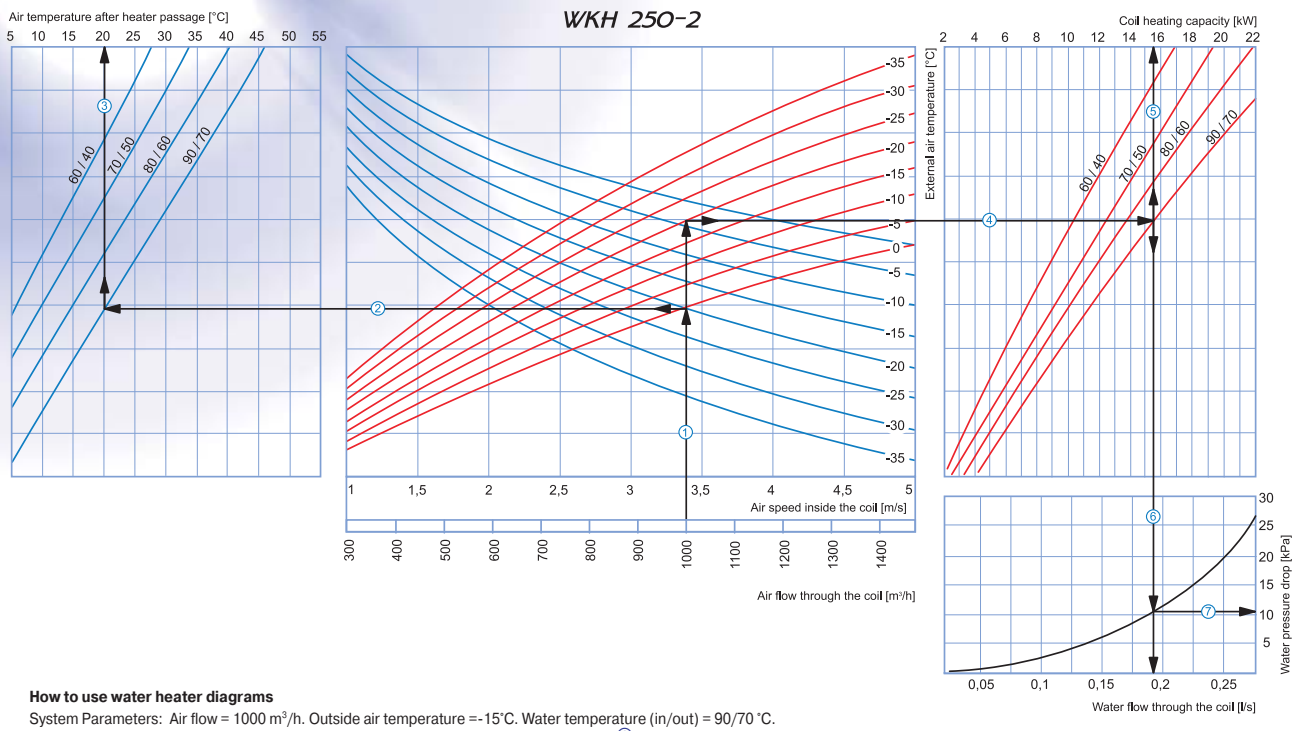

How to use water heater diagrams

System Parameters: Air flow = 1000 m³/h. Outside air temperature =-15°C. Water temperature (in/out) = 90/70 °C.

- **Air Speed inside coil:** Starting from 1000 m³/h on the air flow scale draw a vertical line ①. This line crosses the air speed axis and shows a value of about 3.4 m/s.
- **Supply air temperature:** Prolong the line ① up to the point where it crosses the outside air temperature (blue curve, e.g. -20°C); then draw a horizontal line ② from this point to the left until it crosses the water in/out temperature curve (e.g. 90/70 °C). From this point draw a vertical line ③ to the supply air temperature axis on top of the graphic (+20°C).
- **Heating coil capacity:** Prolong the line ① up to the point where it crosses the outside air temperature (e.g. -20°C, red curve) and draw a horizontal line ④ from this point to the right until it crosses the water in/out temperature curve (e.g., 90/70 °C). From here draw a vertical line ⑤ up to the scale representing the heating coil capacity (15.5 kW).
- **Water flow:** Prolong the line ⑤ down to the water flow axis ⑥ at the bottom of the graphic (0.019 l/s).
- **Water pressure drop:** Draw the line ⑦ from the point where the line ⑥ crosses the black curve to the pressure drop axis (11 kPa).

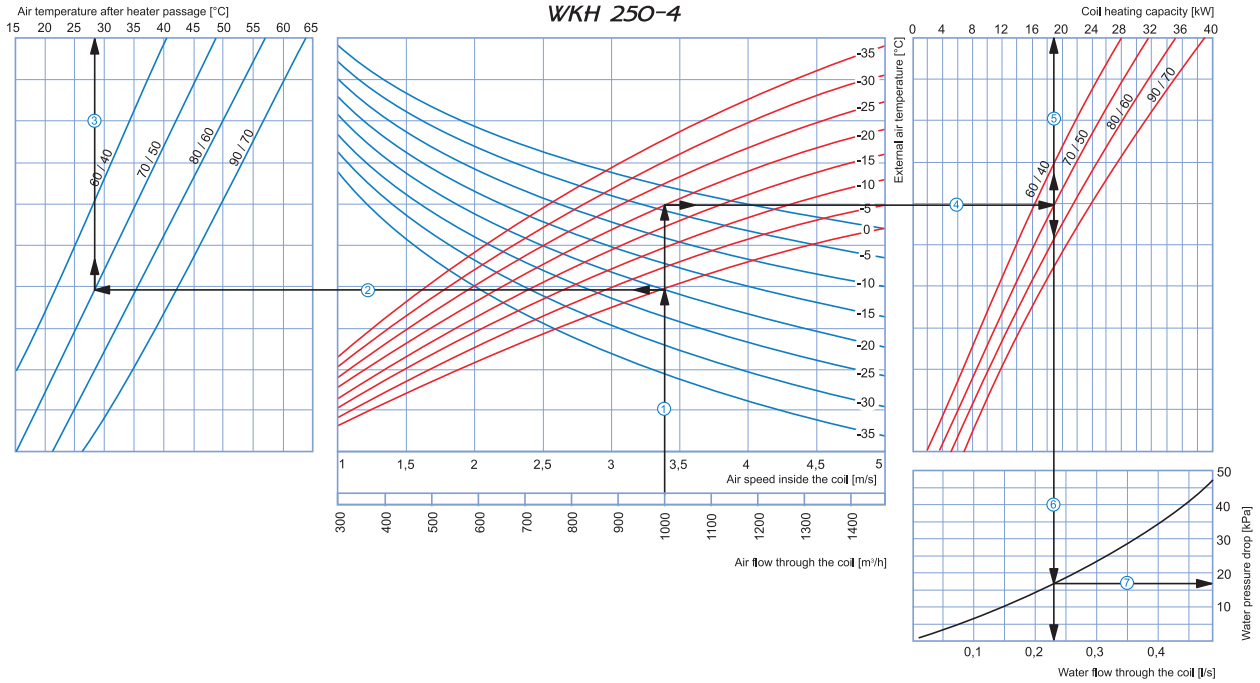

How to use water heater diagrams

System Parameters: Air flow = 1000 m³/h. Outside air temperature =-20°C. Water temperature (in/out) = 70/50 °C.

- **Air Speed inside coil:** Starting from 1000 m³/h on the air flow scale draw a vertical line ①. This line crosses the air speed axis and shows a value of about 3.4 m/s.
- **Supply air temperature:** Prolong the line ① up to the point where it crosses the outside air temperature (blue curve, e.g. -20°C); then draw a horizontal line ② from this point to the left until it crosses the water in/out temperature curve (e.g. 70/50 °C). From this point draw a vertical line ③ to the supply air temperature axis on top of the graphic (+27°C).
- **Heating coil capacity:** Prolong the line ① up to the point where it crosses the outside air temperature (e.g. -20°C, red curve) and draw a horizontal line ④ from this point to the right until it crosses the water in/out temperature curve (e.g., 70/50 °C). From here draw a vertical line ⑤ up to the scale representing the heating coil capacity (19 kW).
- **Water flow:** Prolong the line ⑤ down to the water flow axis ⑥ at the bottom of the graphic (0.023 l/s).
- **Water pressure drop:** Draw the line ⑦ from the point where the line ⑥ crosses the black curve to the pressure drop axis (17 kPa).

Water heaters calculation diagram

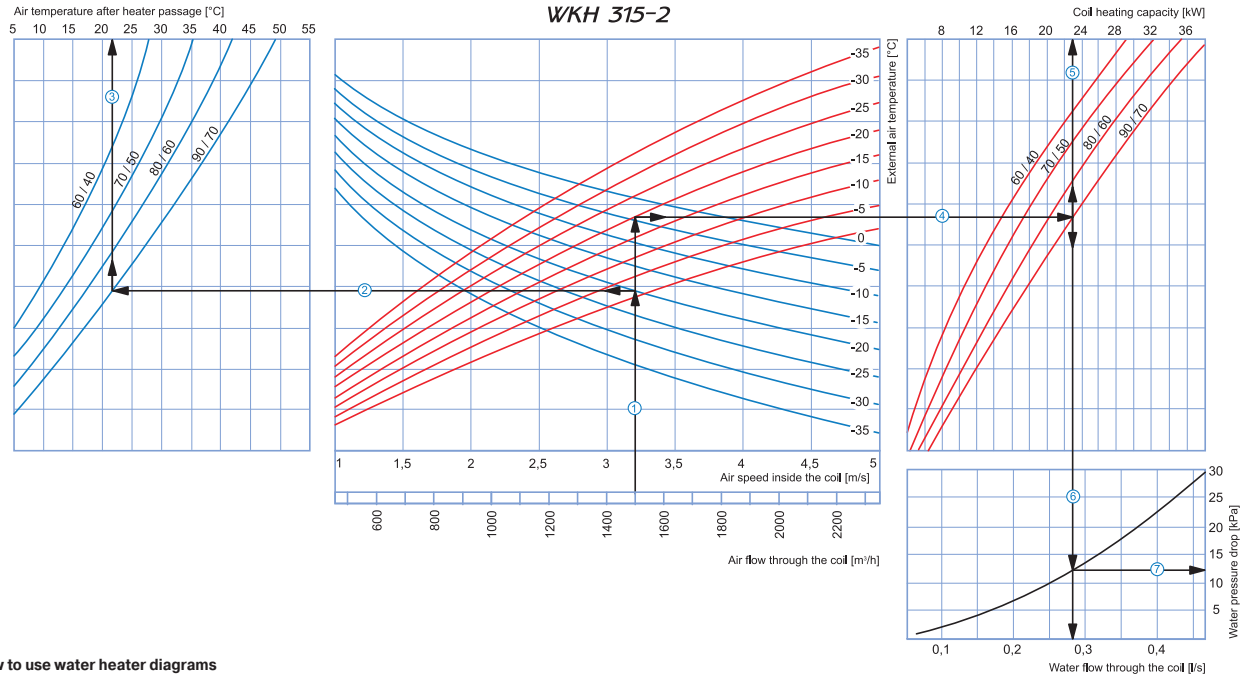

How to use water heater diagrams

System Parameters: Air flow = 1500m³/h. Outside air temperature =-20°C. Water temperature (in/out) = 90/70 °C.

- **Air Speed inside coil:** Starting from 1500 m³/h on the air flow scale draw a vertical line ①. This line crosses the air speed axis and shows a value of about 3.2 m/s.
- **Supply air temperature:** Prolong the line ① up to the point where it crosses the outside air temperature (blue curve, e.g. -20°C); then draw a horizontal line ② from this point to the left until it crosses the water in/out temperature curve (e.g. 90/70 °C). From this point draw a vertical line ③ to the supply air temperature axis on top of the graphic (+21°C).
- **Heating coil capacity:** Prolong the line ① up to the point where it crosses the outside air temperature (e.g. -20°C, red curve) and draw a horizontal line ④ from this point to the right until it crosses the water in/out temperature curve (e.g., 90/70 °C). From here draw a vertical line ⑤ up to the scale representing the heating coil capacity (23 kW).
- **Water flow:** Prolong the line ⑤ down to the water flow axis ⑥ at the bottom of the graphic (0.28 l/s).
- **Water pressure drop:** Draw the line ⑦ from the point where the line ⑥ crosses the black curve to the pressure drop axis (12.5 kPa).

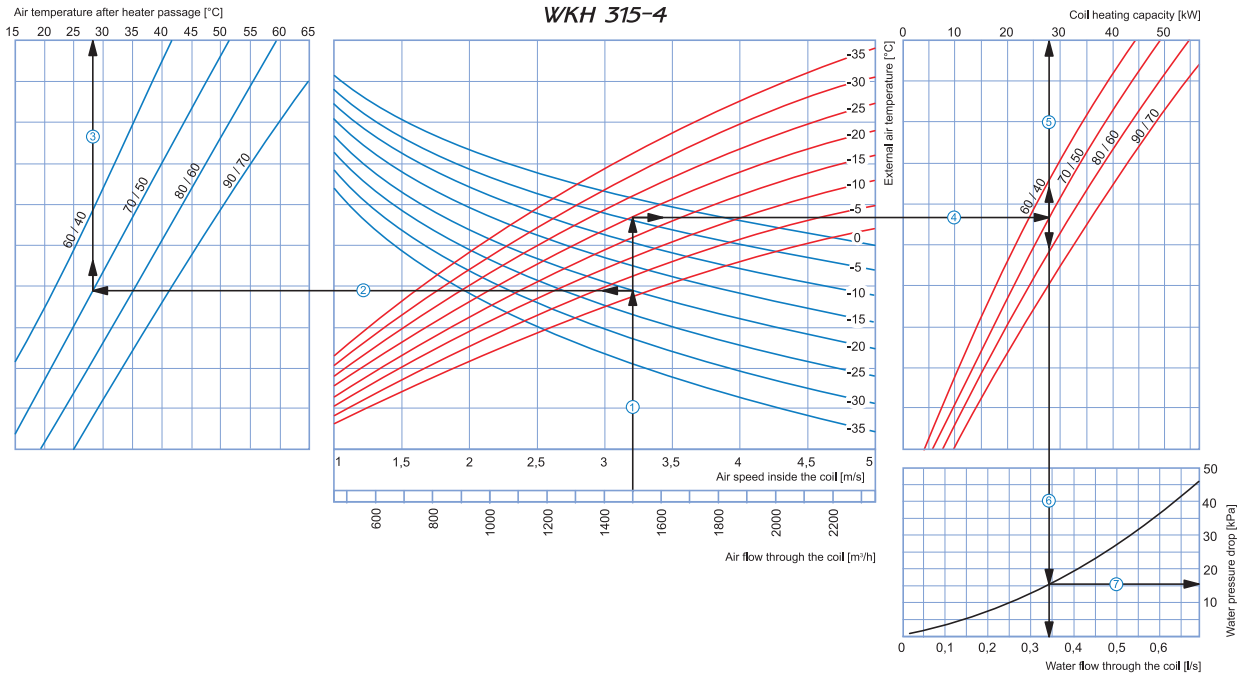

How to use water heater diagrams

System Parameters: Air flow = 1500 m³/h. Outside air temperature =-20°C. Water temperature (in/out) = 70/50 °C.

- **Air Speed inside coil:** Starting from 1500 m³/h on the air flow scale draw a vertical line ①. This line crosses the air speed axis and shows a value of about 3.2 m/s.
- **Supply air temperature:** Prolong the line ① up to the point where it crosses the outside air temperature (blue curve, e.g. -20°C); then draw a horizontal line ② from this point to the left until it crosses the water in/out temperature curve (e.g. 70/50 °C). From this point draw a vertical line ③ to the supply air temperature axis on top of the graphic (+28°C).
- **Heating coil capacity:** Prolong the line ① up to the point where it crosses the outside air temperature (e.g. -20°C, red curve) and draw a horizontal line ④ from this point to the right until it crosses the water in/out temperature curve (e.g., 70/50 °C). From here draw a vertical line ⑤ up to the scale representing the heating coil capacity (28.0 kW).
- **Water flow:** Prolong the line ⑤ down to the water flow axis ⑥ at the bottom of the graphic (0.34 l/s).
- **Water pressure drop:** Draw the line ⑦ from the point where the line ⑥ crosses the black curve to the pressure drop axis (16 kPa).

Duct electrical heaters

EKH

for rectangular ducts

Application

- For warming up of supply air in heating, ventilation and air conditioning systems installed in various premises.
- Compatible with 400x200 up to 1000x500 mm rectangular air ducts.

Design

- Galvanized steel case and junction box.
- Heating elements are made of stainless steel and have additional ribbing to increase heat exchange surface.
- Several power options for each standard size.
- For higher heating capacity several heaters may be installed in series.
- Equipped with overheat protection thermostats:

– basic protection with automatic restart at +50 ^{0}C;
– emergency protection with manual restart at +90 ^{0}C.

Mounting

- Fixing to rectangular ducts with flange connection.
- Any mounting position except for the junction box downwards to prevent condensate leakage and short circuit.
- Install a filter upstream to the heater to protect heating elements against dirt ingress.
- Recommended distance between the heater and other system components must be not less than one air heater diagonal for air flow stabilization.
- Duct heaters are rated for minimum air flow speed 1.5 m/s and maximum operating air temperature supplied to the units 40 ^{0}C. In case of speed regulation with a speed controller the minimum air speed through the heater must be provided.
- For correct and safe heater operation an automatic control and protection system is recommended, including the following functions:

– regulation of the heating capacity and temperature of the air heated up;
– filter clogging control by a differential air pressure sensor;
– power cut-off in case of the supply fan shutdown or low air flow speed as well as in case of actuating the overheat protection thermostats;
– heat removal from the heating elements after ventilation system shutdown.

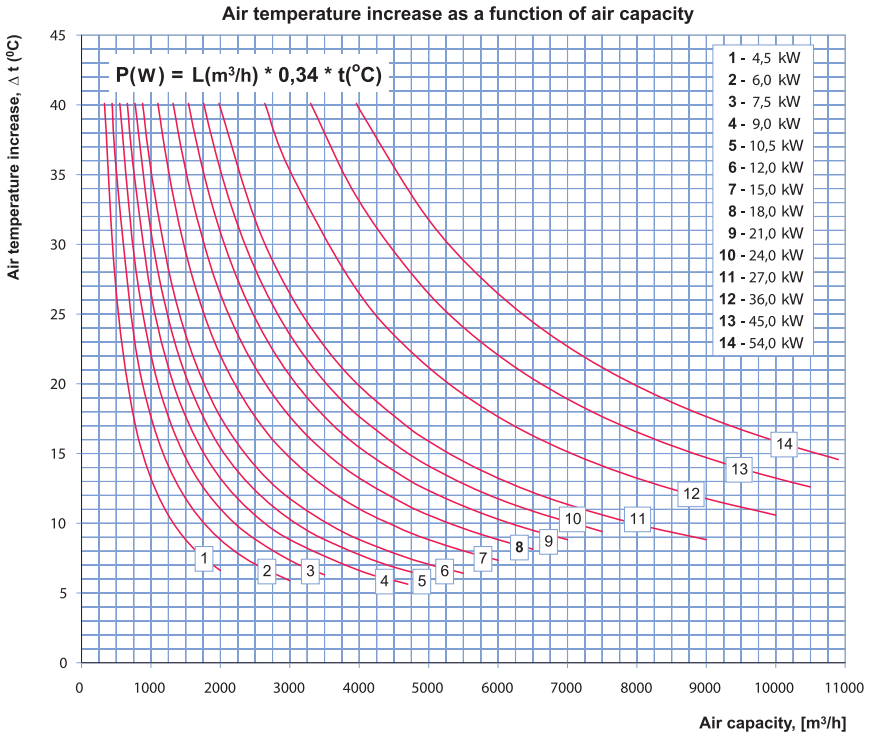

Specifications

Model	Minimum air capacity [m³/h]	Current [A]	Voltage [V]	Power [kW]	Number of heating coils x capacity [kW]
EKH 40x20-4.5	330	6.5	400	4.5	3x1.5
EKH 40x20-6	440	8.7	400	6.0	3x2.0
EKH 40x20-7.5	550	10.9	400	7.5	3x2.5
EKH 40x20-9	660	13.0	400	9.0	3x3.0
EKH 40x20-10.5	770	15.2	400	10.5	3x3.5
EKH 40x20-12	880	17.4	400	12.0	3x4.0
EKH 40x20-15	1100	21.7	400	15.0	3x5.0
EKH 50x25-6	440	8.7	400	6.0	3x2.0
EKH 50x25-7.5	550	10.9	400	7.5	3x2.5
EKH 50x25-9	660	13.0	400	9.0	3x3.0
EKH 50x25-10.5	770	15.2	400	10.5	3x3.5
EKH 50x25-12	880	17.4	400	12.0	3x4.0
EKH 50x25-15	1100	21.7	400	15.0	3x5.0
EKH 50x25-18	1320	26.0	400	18.0	3x6.0
EKH 50x25-21	1540	30.0	400	21.0	3x7.0
EKH 50x30-6	440	8.7	400	6.0	3x2.0
EKH 50x30-7.5	550	10.9	400	7.5	3x2.5
EKH 50x30-9	660	13.0	400	9.0	3x3.0
EKH 50x30-10.5	770	15.2	400	10.5	3x3.5
EKH 50x30-12	880	17.4	400	12.0	3x4.0
EKH 50x30-15	1100	21.7	400	15.0	3x5.0
EKH 50x30-18	1320	26.0	400	18.0	3x6.0
EKH 50x30-21	1540	30.0	400	21.0	3x7.0
EKH 60x30-9	660	13.0	400	9.0	3x3.0
EKH 60x30-12	880	17.4	400	12.0	3x4.0
EKH 60x30-15	1100	21.7	400	15.0	3x5.0
EKH 60x30-18	1320	26.0	400	18.0	3x6.0
EKH 60x30-21	1540	30.0	400	21.0	3x7.0
EKH 60x30-24	1760	34.7	400	24.0	3x8.0
EKH 60x35-9	660	13.0	400	9.0	3x3.0
EKH 60x35-12	880	17.4	400	12.0	3x4.0
EKH 60x35-15	1100	21.7	400	15.0	3x5.0
EKH 60x35-18	1320	26.0	400	18.0	3x6.0
EKH 60x35-21	1540	30.0	400	21.0	3x7.0
EKH 60x35-24	1760	34.7	400	24.0	3x8.0
EKH 70x40-18	1320	26.0	400	18.0	6x3.0
EKH 70x40-27	1980	39.0	400	27.0	9x3.0
EKH 70x40-36	2640	52.0	400	36.0	12x3.0
EKH 80x50-27	1980	39.0	400	27.0	9x3.0
EKH 80x50-36	2640	52.0	400	36.0	12x3.0
EKH 80x50-54	3960	78.0	400	54.0	18x3.0
EKH 90x50-45	3300	65.0	400	45.0	15x3.0
EKH 90x50-54	3960	78.0	400	54.0	18x3.0
EKH 100x50-45	3300	65.0	400	45.0	15x3.0
EKH 100x50-54	3960	78.0	400	54.0	18x3.0

Technical data

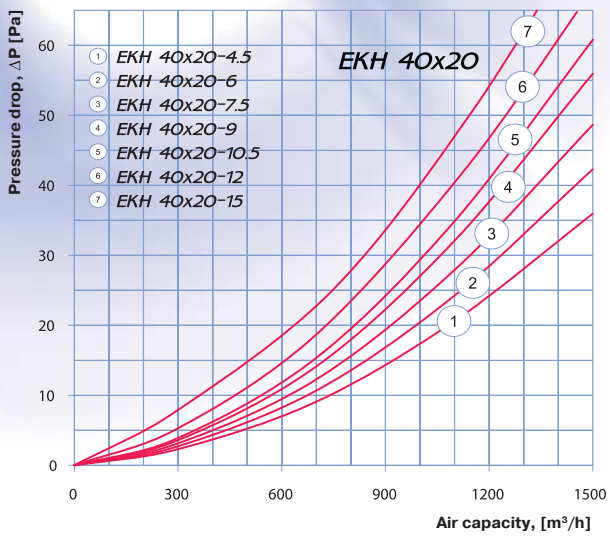

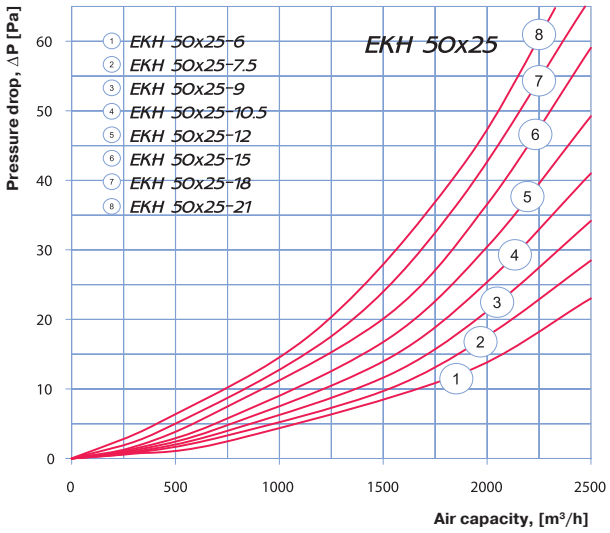

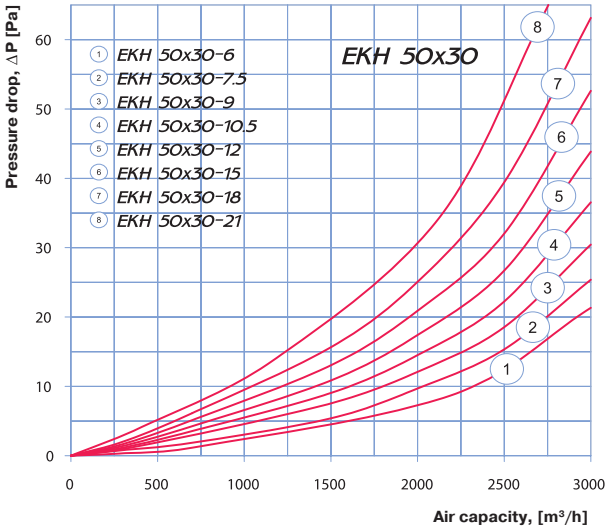

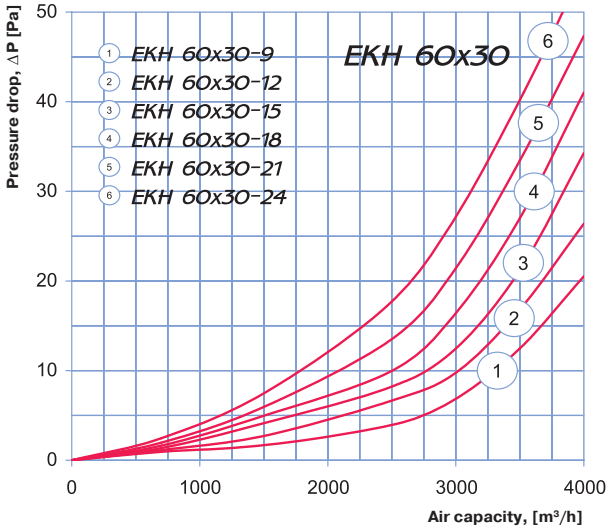

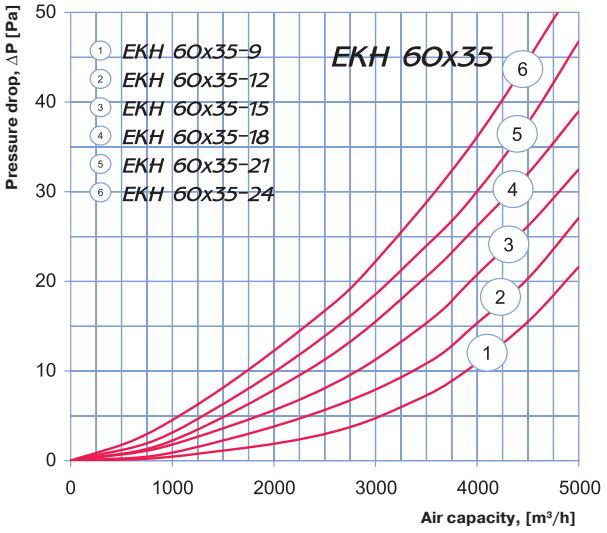

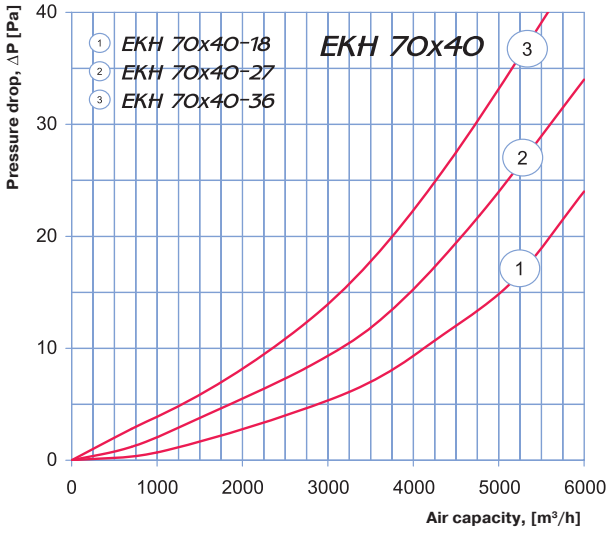

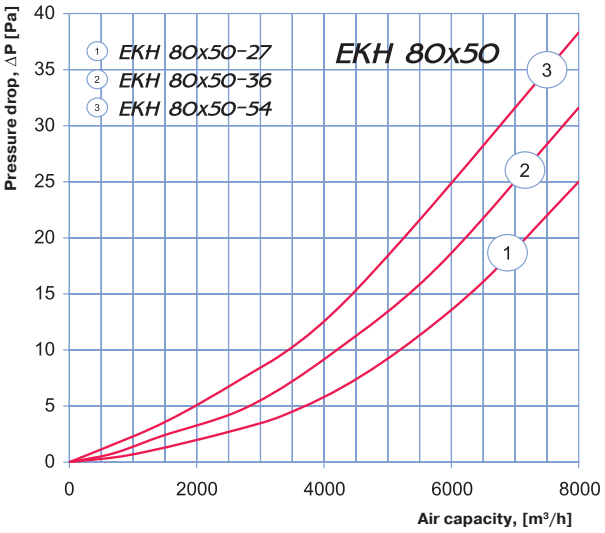

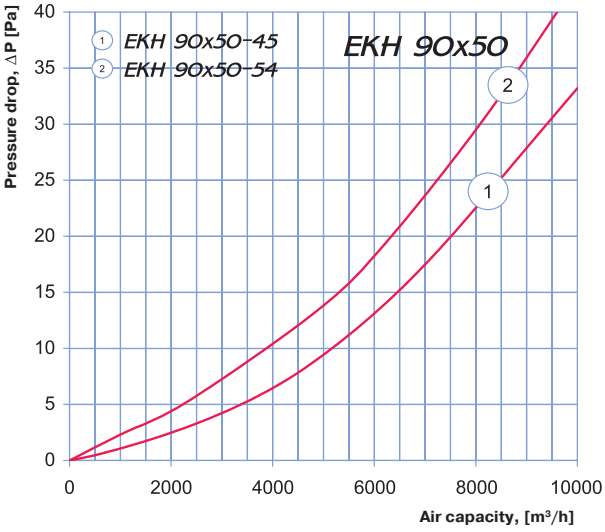

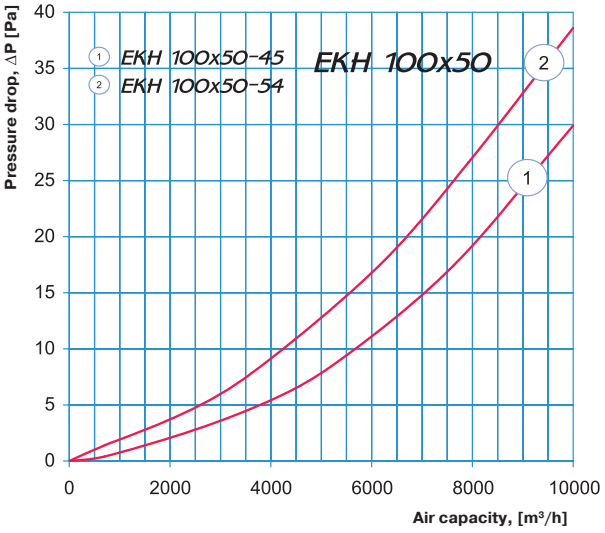

Overall dimensions

Model	Dimensions [mm]								Weight [kg]
	B	B1	B2	B3	H	H1	H2	L	
EKH 40x20-4.5	400	420	440	540	200	220	240	200	6.5
EKH 40x20-6	400	420	440	540	200	220	240	200	6.5
EKH 40x20-7.5	400	420	440	540	200	220	240	200	6.5
EKH 40x20-9	400	420	440	540	200	220	240	200	6.5
EKH 40x20-10.5	400	420	440	540	200	220	240	200	6.5
EKH 40x20-12	400	420	440	540	200	220	240	200	6.5
EKH 40x20-15	400	420	440	540	200	220	240	200	6.5
EKH 50x25-6	500	520	540	640	250	270	290	200	7.65
EKH 50x25-7.5	500	520	540	640	250	270	290	200	7.65
EKH 50x25-9	500	520	540	640	250	270	290	200	7.65
EKH 50x25-10.5	500	520	540	640	250	270	290	200	7.65
EKH 50x25-12	500	520	540	640	250	270	290	200	7.65
EKH 50x25-15	500	520	540	640	250	270	290	200	7.65
EKH 50x25-18	500	520	540	640	250	270	290	200	7.65
EKH 50x25-21	500	520	540	640	250	270	290	200	7.65
EKH 50x30-6	500	520	540	640	300	320	340	200	8.2
EKH 50x30-7.5	500	520	540	640	300	320	340	200	8.2
EKH 50x30-9	500	520	540	640	300	320	340	200	8.2
EKH 50x30-10.5	500	520	540	640	300	320	340	200	8.2
EKH 50x30-12	500	520	540	640	300	320	340	200	8.2
EKH 50x30-15	500	520	540	640	300	320	340	200	8.2
EKH 50x30-18	500	520	540	640	300	320	340	200	8.2
EKH 50x30-21	500	520	540	640	300	320	340	200	8.2
EKH 60x30-9	600	620	640	740	300	320	340	200	9.4
EKH 60x30-12	600	620	640	740	300	320	340	200	9.4
EKH 60x30-15	600	620	640	740	300	320	340	200	9.4
EKH 60x30-18	600	620	640	740	300	320	340	200	9.4
EKH 60x30-21	600	620	640	740	300	320	340	200	9.4
EKH 60x30-24	600	620	640	740	300	320	340	200	9.4
EKH 60x35-9	600	620	640	740	350	370	390	200	9.75
EKH 60x35-12	600	620	640	740	350	370	390	200	9.75
EKH 60x35-15	600	620	640	740	350	370	390	200	9.75
EKH 60x35-18	600	620	640	740	350	370	390	200	9.75
EKH 60x35-21	600	620	640	740	350	370	390	200	9.75
EKH 60x35-24	600	620	640	740	350	370	390	200	9.75
EKH 70x40-18	700	720	740	840	400	420	440	390	14
EKH 70x40-27	700	720	740	840	400	420	440	510	18.5
EKH 70x40-36	700	720	740	840	400	420	440	750	25
EKH 80x50-27	800	820	840	940	500	520	540	390	19
EKH 80x50-36	800	820	840	940	500	520	540	510	23.5
EKH 80x50-54	800	820	840	940	500	520	540	750	30
EKH 90x50-45	900	920	940	1040	500	520	540	750	31
EKH 90x50-54	900	920	940	1040	500	520	540	750	33.5
EKH 100x50-45	1000	1020	1040	1140	500	520	540	750	33
EKH 100x50-54	1000	1020	1040	1140	500	520	540	750	36

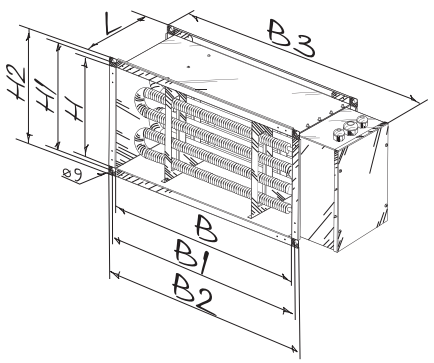

Duct water heaters

WKH

for rectangular ducts

Application

- For warming up of supply air in ventilation systems installed in various premises.
- Suitable for installation in supply or air handling units to warm up the supply air flow.
- For indoor use only if water serves as a heat carrier.
- For outdoor application use antifreezing mixture (ethylene glycol solution).
- Compatible with 400x200 up to 1000x500 mm rectangular air ducts.

Design

- Galvanized steel case.
- Copper pipe manifold.
- Heat exchange surface made of aluminium plates.
- Equipped with a nipple for the system deaeration.
- Outlet header is equipped with a spigot for installation of an immersion temperature sensor or freezing protection mechanism.
- Available in two, three- or four-row tube modifications.
- Suitable for operation at maximum operating pressure 1.6 MPa (16 bar) and maximum operating temperature +100 ^{0}C.

Mounting

- Fixing to rectangular ducts with flange connection.
- Any mounting position that ensures the heater deaeration.
- Install a filter upstream to the heater to protect heating elements against dirt ingress.
- Install the heater in front or behind the fan. In case of mounting behind the fan ensure the distance no less than 1-1.5 m for air flow stabilization and keep the maximum permissible air temperature inside the fan.
- Connect the heater on counter-flow basis, otherwise its capacity drops by 5-15 %. All the nomographic charts are rated for counter-flow connection.
- For correct and safe heater operation an automatic control and protection system is recommended, including the following functions:

– regulation of the heating capacity and temperature of the air heated up;
– filter clogging control by a differential air pressure sensor;
– ventilation system start-up with pre-heated heater;
– use of air dampers with a servo actuator with a return spring;
– fan turning off in case of the heater freezing danger.

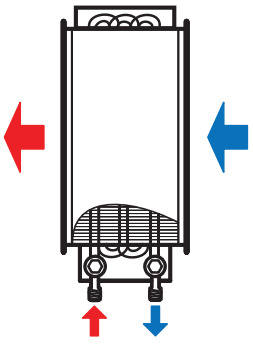

Connection against air flow

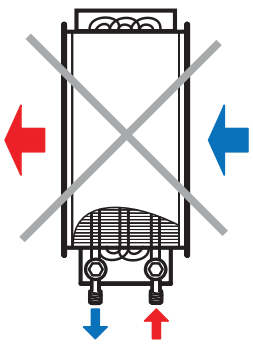

Connection along air flow

Overall dimensions

Model	Dimensions [mm]												Number of water coil rows	Weight [kg]
	B	B1	B2	B3	H	H1	H2	H3	L	L1	L2	K		
WKH 40x20-2	400	420	440	565	200	220	240	150	200	43	43	G 3/4”	2	7.6
WKH 40x20-4	400	420	440	565	200	220	240	150	200	38	65	G 3/4”	4	8.1
WKH 50x25-2	500	520	540	665	250	270	290	200	200	43	43	G 3/4”	2	15.8
WKH 50x25-4	500	520	540	665	250	270	290	200	200	38	65	G 3/4”	4	16.3
WKH 50x30-2	500	520	540	665	300	320	340	250	200	43	43	G 1”	2	11.5
WKH 50x30-4	500	520	540	665	300	320	340	250	200	38	65	G 1”	4	12.0
WKH 60x30-2	600	620	640	765	300	320	340	250	200	43	43	G 1”	2	21.8
WKH 60x30-4	600	620	640	765	300	320	340	250	200	38	65	G 1”	4	22.3
WKH 60x35-2	600	620	640	765	350	370	390	300	200	43	43	G 1”	2	22.4
WKH 60x35-4	600	620	640	765	350	370	390	300	200	38	65	G 1”	4	22.9
WKH 70x40-2	700	720	740	865	400	420	440	350	200	36	47	G 1”	2	27.8
WKH 70x40-3	700	720	740	865	400	420	440	350	200	42	58	G 1”	3	28.4
WKH 80x50-2	800	820	840	965	500	520	540	450	200	36	47	G 1”	2	36.5
WKH 80x50-3	800	820	840	965	500	520	540	450	200	42	58	G 1”	3	37.2
WKH 90x50-2	900	920	940	1065	500	520	540	450	200	36	47	G 1”	2	40.4
WKH 90x50-3	900	920	940	1065	500	520	540	450	200	42	58	G 1”	3	41.2
WKH 100x50-2	1000	1020	1040	1165	500	520	540	450	200	36	47	G 1”	2	44.3
WKH 100x50-3	1000	1020	1040	1165	500	520	540	450	200	42	58	G 1”	3	45.2

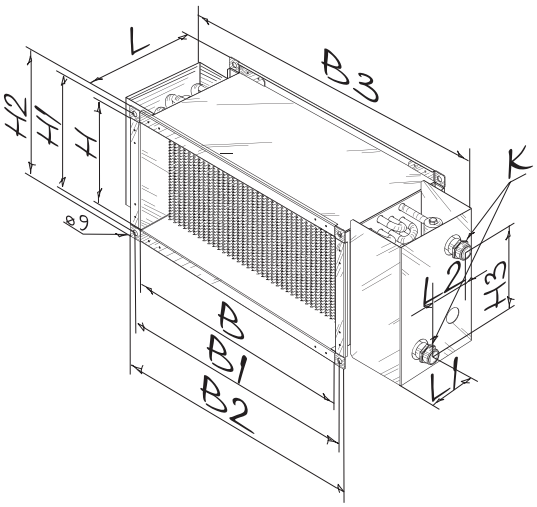

Air pressure loss for water heaters WKH

WKH rectangular heaters

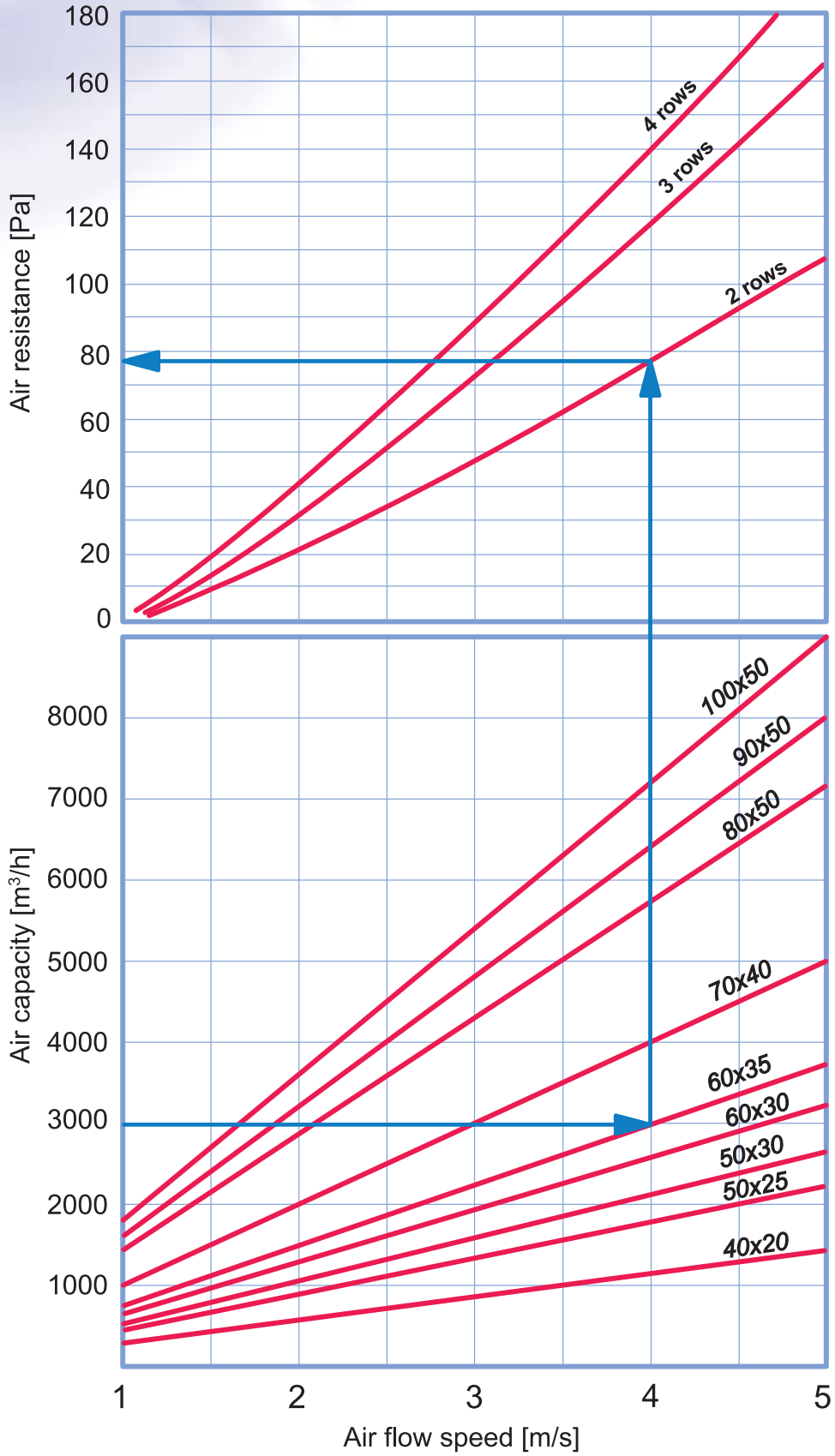

Water heaters calculation diagram

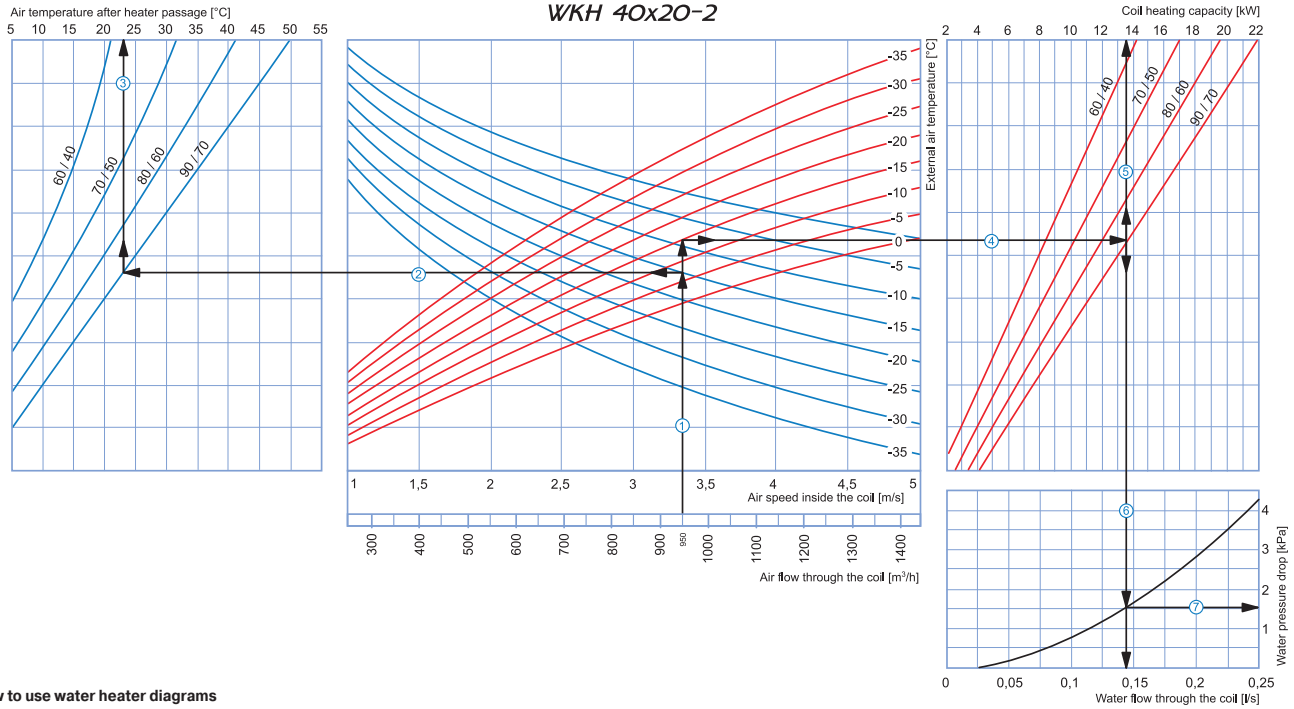

How to use water heater diagrams

System Parameters: Air flow = 950m³/h. Outside air temperature =-15°C. Water temperature (in/out) = 90/70 °C.

- **Air Speed inside coil:** Starting from 950 m³/h on the air flow scale draw a vertical line ①. This line crosses the air speed axis and shows a value of about 3.35 m/s.
- **Supply air temperature:** Prolong the line ① up to the point where it crosses the outside air temperature (blue curve, e.g. -15°C); then draw a horizontal line ② from this point to the left until it crosses the water in/out temperature curve (e.g. 90/70 °C). From this point draw a vertical line ③ to the supply air temperature axis on top of the graphic (+23°C).
- **Heating coil capacity:** Prolong the line ① up to the point where it crosses the outside air temperature (e.g. -15°C, red curve) and draw a horizontal line ④ from this point to the right until it crosses the water in/out temperature curve (e.g., 90/70 °C). From here draw a vertical line ⑤ up to the scale representing the heating coil capacity (13.5 kW).
- **Water flow:** Prolong the line ⑤ down to the water flow axis ⑥ at the bottom of the graphic (0.14 l/s).
- **Water pressure drop:** Draw the line ⑦ from the point where the line ⑥ crosses the black curve to the pressure drop axis (1.5 kPa).

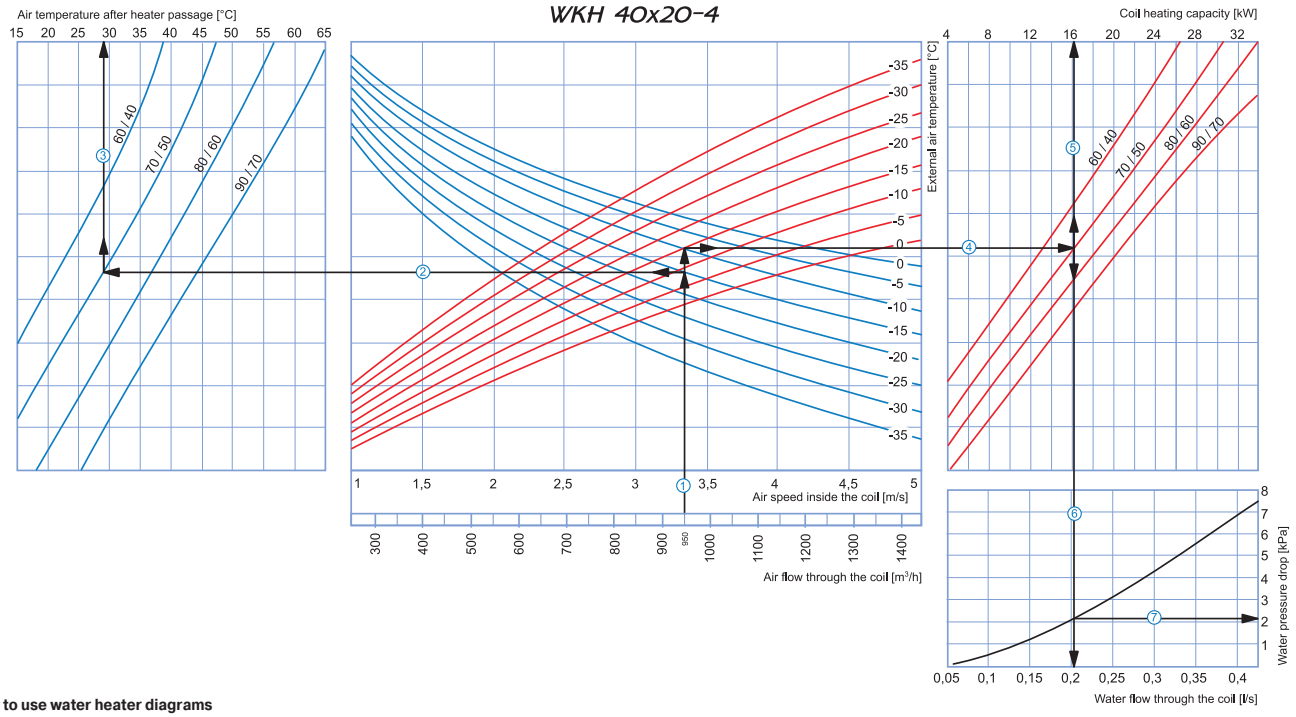

How to use water heater diagrams

System Parameters: Air flow = 950 m³/h. Outside air temperature =-15°C. Water temperature (in/out) = 70/50 °C.

- **Air Speed inside coil:** Starting from 950 m³/h on the air flow scale draw a vertical line ①. This line crosses the air speed axis and shows a value of about 3.35 m/s.
- **Supply air temperature:** Prolong the line ① up to the point where it crosses the outside air temperature (blue curve, e.g. -15°C); then draw a horizontal line ② from this point to the left until it crosses the water in/out temperature curve (e.g. 70/50 °C). From this point draw a vertical line ③ to the supply air temperature axis on top of the graphic (+29°C).
- **Heating coil capacity:** Prolong the line ① up to the point where it crosses the outside air temperature (e.g. -15°C, red curve) and draw a horizontal line ④ from this point to the right until it crosses the water in/out temperature curve (e.g., 70/50 °C). From here draw a vertical line ⑤ up to the scale representing the heating coil capacity (16 kW).
- **Water flow:** Prolong the line ⑤ down to the water flow axis ⑥ at the bottom of the graphic (0.2 l/s).
- **Water pressure drop:** Draw the line ⑦ from the point where the line ⑥ crosses the black curve to the pressure drop axis (2.1 kPa).

Water heaters calculation diagram

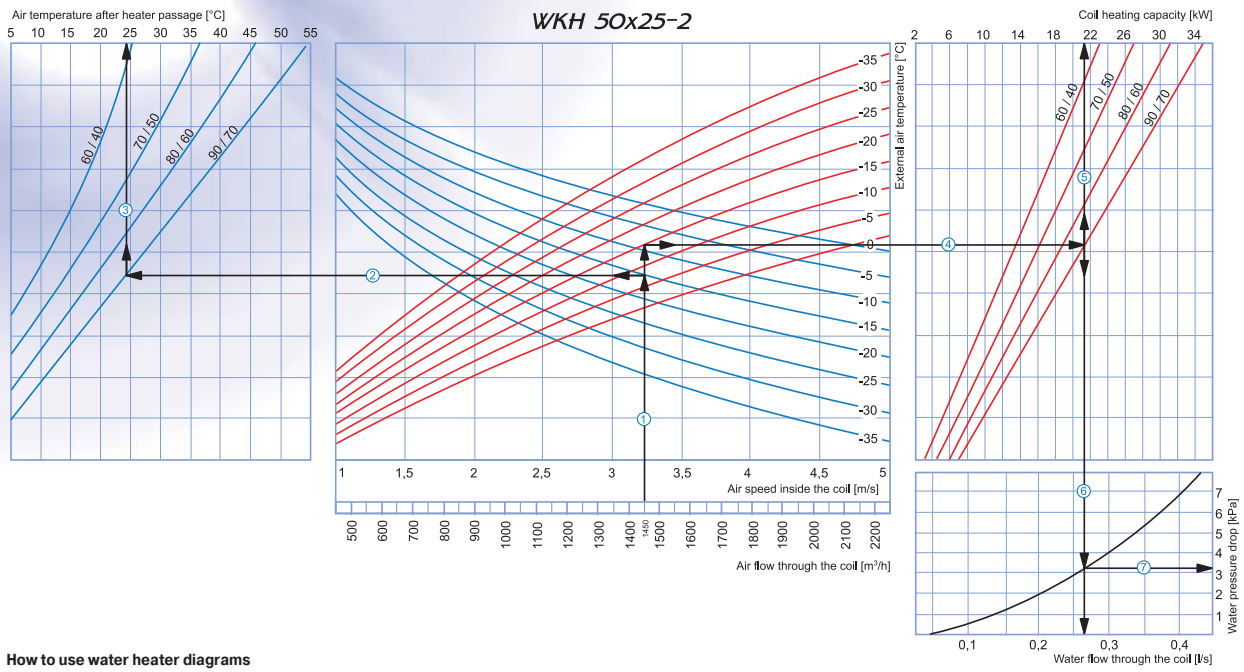

How to use water heater diagrams

System Parameters: Air flow = 1450 m³/h. Outside air temperature =-15°C. Water temperature (in/out) = 90/70 °C.

- **Air Speed inside coil:** Starting from 1450 m³/h on the air flow scale draw a vertical line ①. This line crosses the air speed axis and shows a value of about 3.2 m/s.
- **Supply air temperature:** Prolong the line ① up to the point where it crosses the outside air temperature (blue curve, e.g. -15°C); then draw a horizontal line ② from this point to the left until it crosses the water in/out temperature curve (e.g. 90/70 °C). From this point draw a vertical line ③ to the supply air temperature axis on top of the graphic (+24°C).
- **Heating coil capacity:** Prolong the line ① up to the point where it crosses the outside air temperature (e.g. -15°C, red curve) and draw a horizontal line ④ from this point to the right until it crosses the water in/out temperature curve (e.g., 90/70 °C). From here draw a vertical line ⑤ up to the scale representing the heating coil capacity (21.5 kW).
- **Water flow:** Prolong the line ⑤ down to the water flow axis ⑥ at the bottom of the graphic (0.27 l/s).
- **Water pressure drop:** Draw the line ⑦ from the point where the line ⑥ crosses the black curve to the pressure drop axis (3.2 kPa).

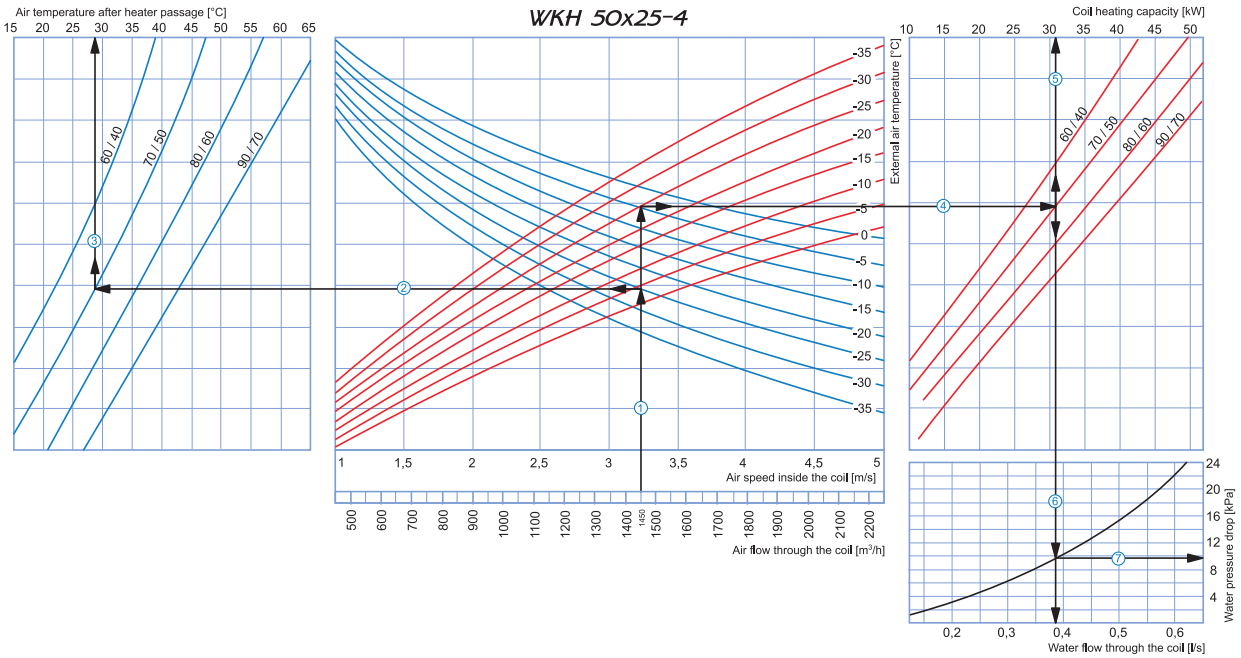

How to use water heater diagrams

System Parameters: Air flow = 1450 m³/h. Outside air temperature =-25°C. Water temperature (in/out) = 70/50 °C.

- **Air Speed inside coil:** Starting from 1450 m³/h on the air flow scale draw a vertical line ①. This line crosses the air speed axis and shows a value of about 3.2 m/s.
- **Supply air temperature:** Prolong the line ① up to the point where it crosses the outside air temperature (blue curve, e.g. -25°C); then draw a horizontal line ② from this point to the left until it crosses the water in/out temperature curve (e.g. 70/50 °C). From this point draw a vertical line ③ to the supply air temperature axis on top of the graphic (+27°C).
- **Heating coil capacity:** Prolong the line ① up to the point where it crosses the outside air temperature (e.g. -25°C, red curve) and draw a horizontal line ④ from this point to the right until it crosses the water in/out temperature curve (e.g., 70/50 °C). From here draw a vertical line ⑤ up to the scale representing the heating coil capacity (31 kW).
- **Water flow:** Prolong the line ⑤ down to the water flow axis ⑥ at the bottom of the graphic (0.38 l/s).
- **Water pressure drop:** Draw the line ⑦ from the point where the line ⑥ crosses the black curve to the pressure drop axis (9.8 kPa).

Water heaters calculation diagram

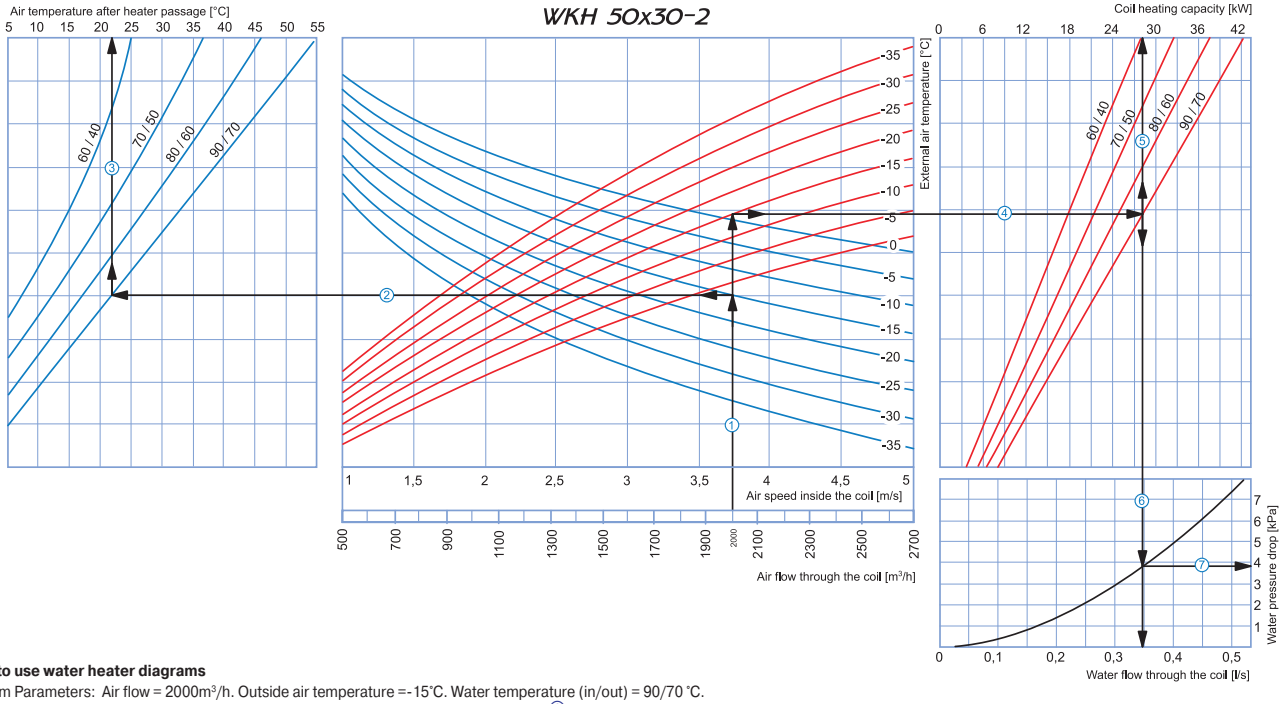

How to use water heater diagrams

System Parameters: Air flow = 2000m³/h. Outside air temperature =-15°C. Water temperature (in/out) = 90/70 °C.

- **Air Speed inside coil:** Starting from 2000 m³/h on the air flow scale draw a vertical line ①. This line crosses the air speed axis and shows a value of about 3.75 m/s.
- **Supply air temperature:** Prolong the line ① up to the point where it crosses the outside air temperature (blue curve, e.g. -15°C); then draw a horizontal line ② from this point to the left until it crosses the water in/out temperature curve (e.g. 90/70 °C). From this point draw a vertical line ③ to the supply air temperature axis on top of the graphic (+22°C).
- **Heating coil capacity:** Prolong the line ① up to the point where it crosses the outside air temperature (e.g. -15°C, red curve) and draw a horizontal line ④ from this point to the right until it crosses the water in/out temperature curve (e.g., 90/70 °C). From here draw a vertical line ⑤ up to the scale representing the heating coil capacity (28 kW).
- **Water flow:** Prolong the line ⑤ down to the water flow axis ⑥ at the bottom of the graphic (0.35 l/s).
- **Water pressure drop:** Draw the line ⑦ from the point where the line ⑥ crosses the black curve to the pressure drop axis (3.8 kPa).

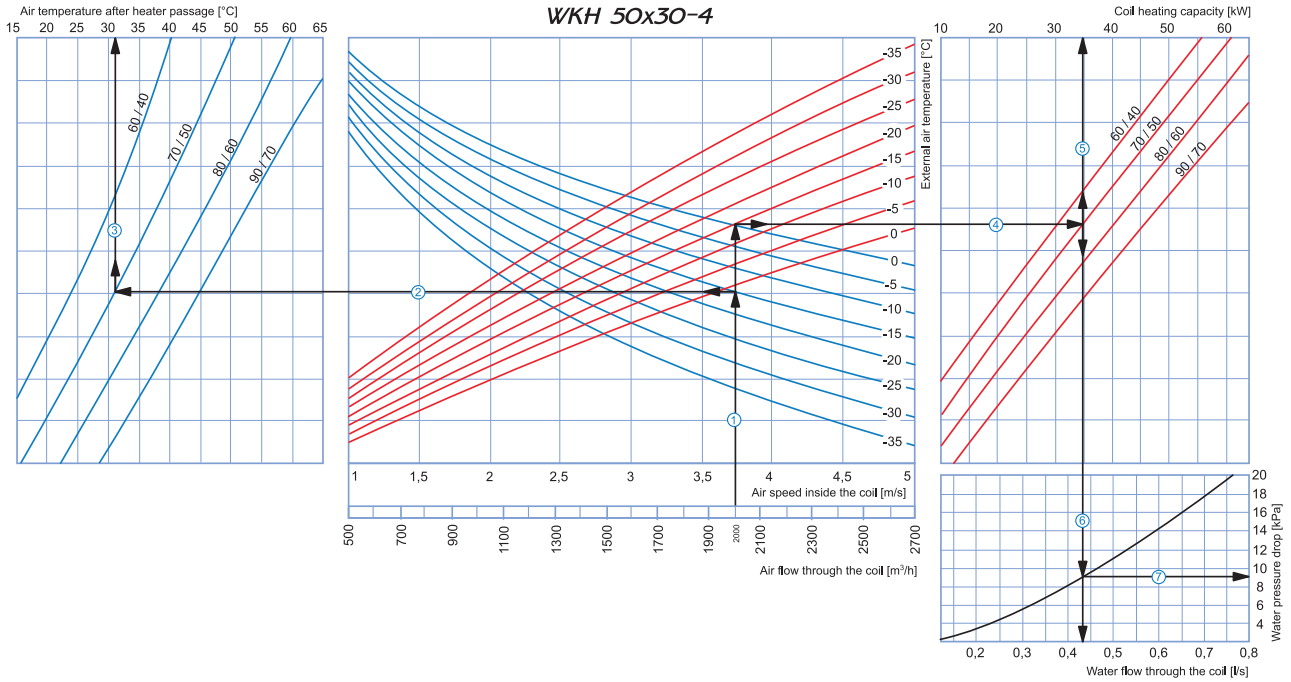

How to use water heater diagrams

System Parameters: Air flow = 2000 m³/h. Outside air temperature =-15°C. Water temperature (in/out) = 70/50 °C.

- **Air Speed inside coil:** Starting from 2000 m³/h on the air flow scale draw a vertical line ①. This line crosses the air speed axis and shows a value of about 3.75 m/s.
- **Supply air temperature:** Prolong the line ① up to the point where it crosses the outside air temperature (blue curve, e.g. -15°C); then draw a horizontal line ② from this point to the left until it crosses the water in/out temperature curve (e.g. 70/50 °C). From this point draw a vertical line ③ to the supply air temperature axis on top of the graphic (+31°C).
- **Heating coil capacity:** Prolong the line ① up to the point where it crosses the outside air temperature (e.g. -15°C, red curve) and draw a horizontal line ④ from this point to the right until it crosses the water in/out temperature curve (e.g., 70/50 °C). From here draw a vertical line ⑤ up to the scale representing the heating coil capacity (35 kW).
- **Water flow:** Prolong the line ⑤ down to the water flow axis ⑥ at the bottom of the graphic (0.43 l/s).
- **Water pressure drop:** Draw the line ⑦ from the point where the line ⑥ crosses the black curve to the pressure drop axis (9 kPa).

Water heaters calculation diagram

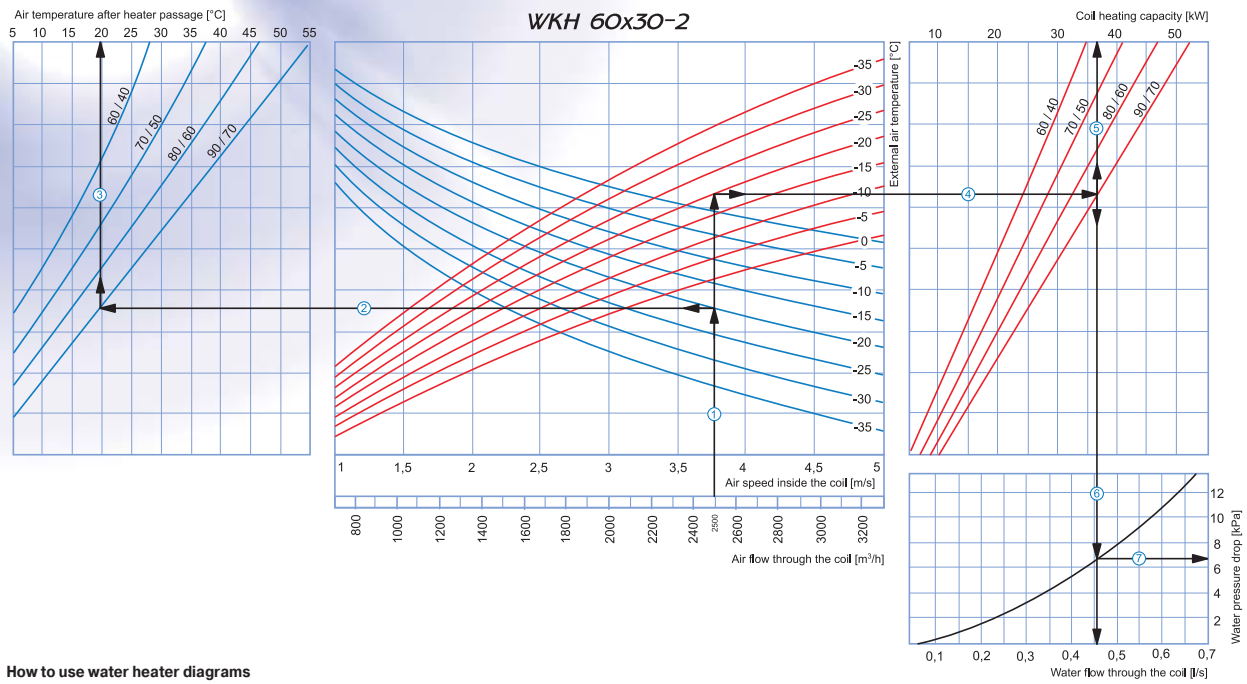

How to use water heater diagrams

System Parameters: Air flow = 2500 m³/h. Outside air temperature =-20°C. Water temperature (in/out) = 90/70 °C.

- **Air Speed inside coil:** Starting from 1450 m³/h on the air flow scale draw a vertical line ①. This line crosses the air speed axis and shows a value of about 3.75 m/s.
- **Supply air temperature:** Prolong the line ① up to the point where it crosses the outside air temperature (blue curve, e.g. -20°C); then draw a horizontal line ② from this point to the left until it crosses the water in/out temperature curve (e.g. 90/70 °C). From this point draw a vertical line ③ to the supply air temperature axis on top of the graphic (+20°C).
- **Heating coil capacity:** Prolong the line ① up to the point where it crosses the outside air temperature (e.g. -20°C, red curve) and draw a horizontal line ④ from this point to the right until it crosses the water in/out temperature curve (e.g., 90/70 °C). From here draw a vertical line ⑤ up to the scale representing the heating coil capacity (37 kW).
- **Water flow:** Prolong the line ⑤ down to the water flow axis ⑥ at the bottom of the graphic (0.46 l/s).
- **Water pressure drop:** Draw the line ⑦ from the point where the line ⑥ crosses the black curve to the pressure drop axis (6.7 kPa).

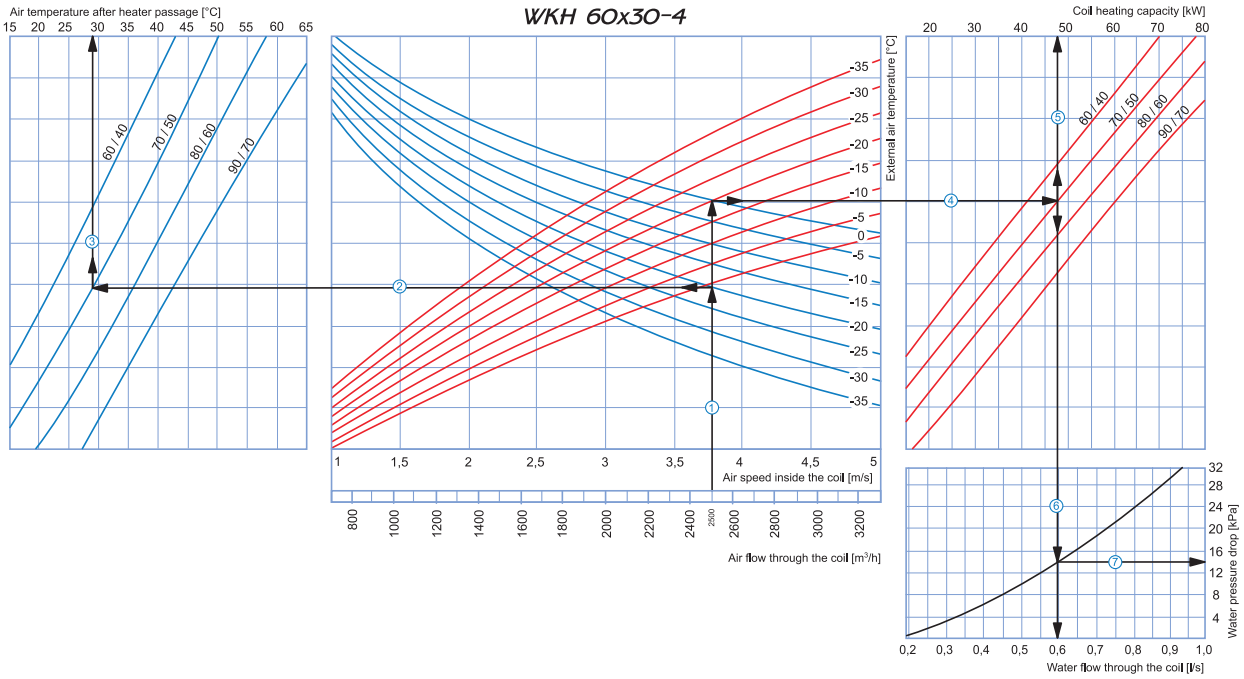

How to use water heater diagrams

System Parameters: Air flow = 2500 m³/h. Outside air temperature =-20°C. Water temperature (in/out) = 70/50 °C.

- **Air Speed inside coil:** Starting from 2500 m³/h on the air flow scale draw a vertical line ①. This line crosses the air speed axis and shows a value of about 3.75 m/s.
- **Supply air temperature:** Prolong the line ① up to the point where it crosses the outside air temperature (blue curve, e.g. -20°C); then draw a horizontal line ② from this point to the left until it crosses the water in/out temperature curve (e.g. 70/50 °C). From this point draw a vertical line ③ to the supply air temperature axis on top of the graphic (+29°C).
- **Heating coil capacity:** Prolong the line ① up to the point where it crosses the outside air temperature (e.g. -20°C, red curve) and draw a horizontal line ④ from this point to the right until it crosses the water in/out temperature curve (e.g., 70/50 °C). From here draw a vertical line ⑤ up to the scale representing the heating coil capacity (48 kW).
- **Water flow:** Prolong the line ⑤ down to the water flow axis ⑥ at the bottom of the graphic (0.6 l/s).
- **Water pressure drop:** Draw the line ⑦ from the point where the line ⑥ crosses the black curve to the pressure drop axis (14 kPa).

Water heaters calculation diagram

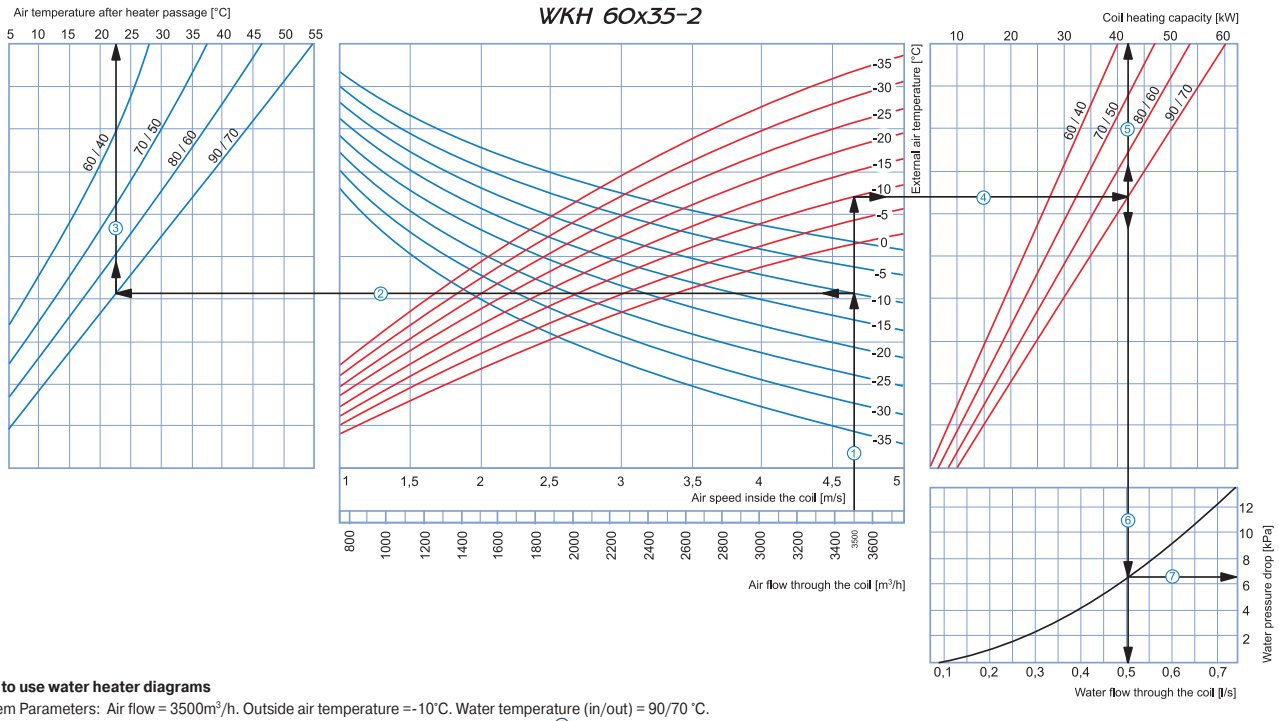

How to use water heater diagrams

System Parameters: Air flow = 3500m³/h. Outside air temperature =-10°C. Water temperature (in/out) = 90/70 °C.

- **Air Speed inside coil:** Starting from 3500 m³/h on the air flow scale draw a vertical line ①. This line crosses the air speed axis and shows a value of about 4.65 m/s.
- **Supply air temperature:** Prolong the line ① up to the point where it crosses the outside air temperature (blue curve, e.g. -10°C); then draw a horizontal line ② from this point to the left until it crosses the water in/out temperature curve (e.g. 90/70 °C). From this point draw a vertical line ③ to the supply air temperature axis on top of the graphic (+22.5°C).
- **Heating coil capacity:** Prolong the line ① up to the point where it crosses the outside air temperature (e.g. -10°C, red curve) and draw a horizontal line ④ from this point to the right until it crosses the water in/out temperature curve (e.g., 90/70 °C). From here draw a vertical line ⑤ up to the scale representing the heating coil capacity (42 kW).
- **Water flow:** Prolong the line ⑤ down to the water flow axis ⑥ at the bottom of the graphic (0.5 l/s).
- **Water pressure drop:** Draw the line ⑦ from the point where the line ⑥ crosses the black curve to the pressure drop axis (6.5 kPa).

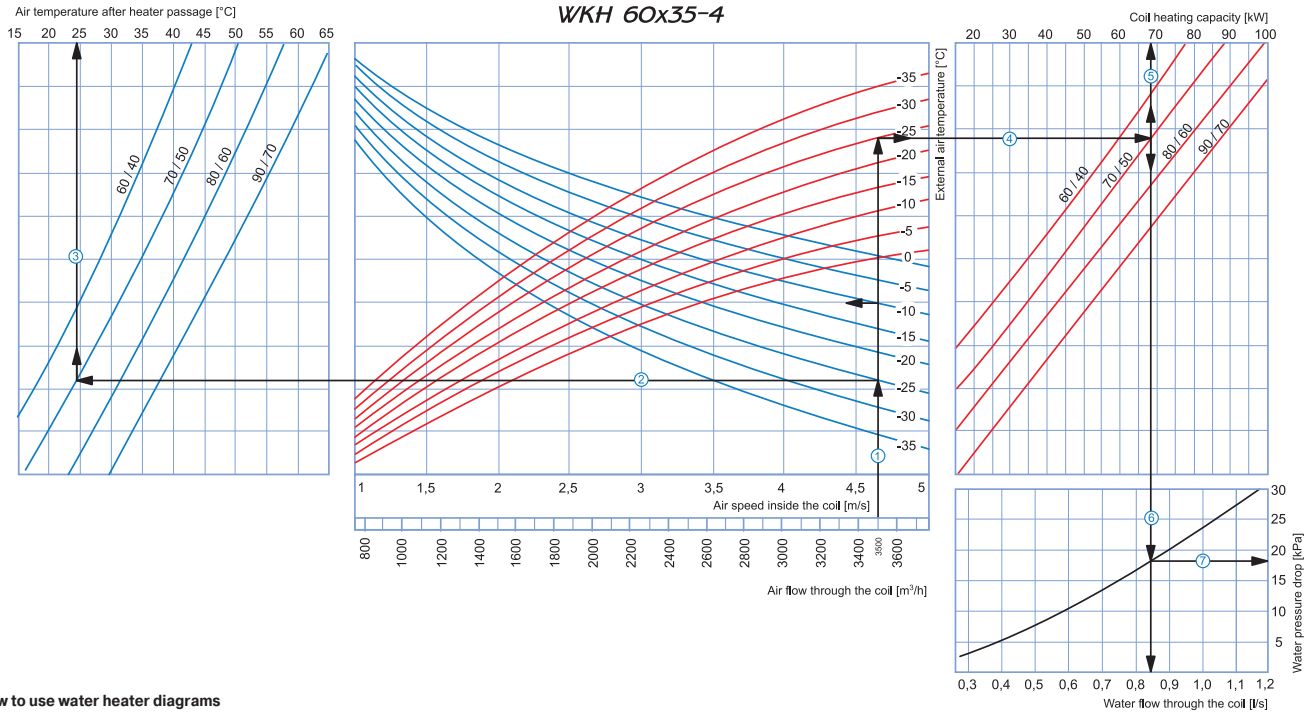

How to use water heater diagrams

System Parameters: Air flow = 3500 m³/h. Outside air temperature =-25°C. Water temperature (in/out) = 70/50 °C.

- **Air Speed inside coil:** Starting from 3500 m³/h on the air flow scale draw a vertical line ①. This line crosses the air speed axis and shows a value of about 4.65 m/s.
- **Supply air temperature:** Prolong the line ① up to the point where it crosses the outside air temperature (blue curve, e.g. -25°C); then draw a horizontal line ② from this point to the left until it crosses the water in/out temperature curve (e.g. 70/50 °C). From this point draw a vertical line ③ to the supply air temperature axis on top of the graphic (+24°C).
- **Heating coil capacity:** Prolong the line ① up to the point where it crosses the outside air temperature (e.g. -25°C, red curve) and draw a horizontal line ④ from this point to the right until it crosses the water in/out temperature curve (e.g., 70/50 °C). From here draw a vertical line ⑤ up to the scale representing the heating coil capacity (68 kW).
- **Water flow:** Prolong the line ⑤ down to the water flow axis ⑥ at the bottom of the graphic (0.84 l/s).
- **Water pressure drop:** Draw the line ⑦ from the point where the line ⑥ crosses the black curve to the pressure drop axis (18 kPa).

Water heaters calculation diagram

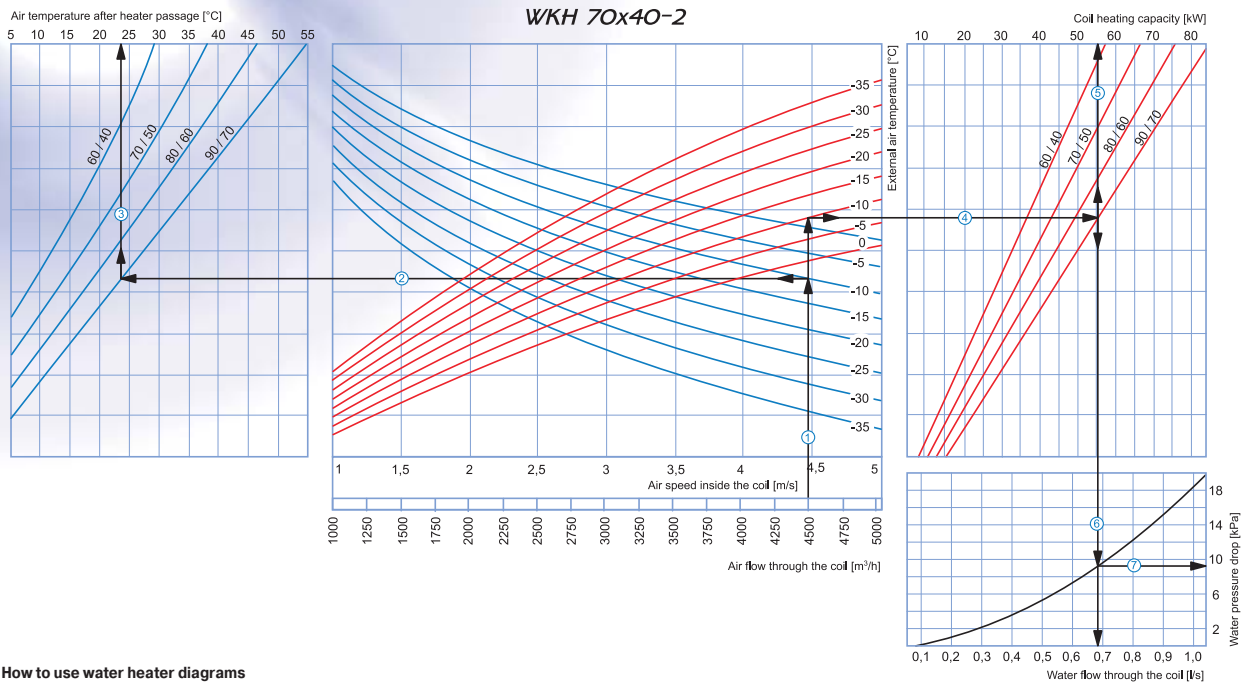

How to use water heater diagrams

System Parameters: Air flow = 4500 m³/h. Outside air temperature =-10°C. Water temperature (in/out) = 90/70 °C.

- **Air Speed inside coil:** Starting from 4500 m³/h on the air flow scale draw a vertical line ①. This line crosses the air speed axis and shows a value of about 3.75 m/s.
- **Supply air temperature:** Prolong the line ① up to the point where it crosses the outside air temperature (blue curve, e.g. -10°C); then draw a horizontal line ② from this point to the left until it crosses the water in/out temperature curve (e.g. 90/70 °C). From this point draw a vertical line ③ to the supply air temperature axis on top of the graphic (+24°C).
- **Heating coil capacity:** Prolong the line ① up to the point where it crosses the outside air temperature (e.g. -10°C, red curve) and draw a horizontal line ④ from this point to the right until it crosses the water in/out temperature curve (e.g., 90/70 °C). From here draw a vertical line ⑤ up to the scale representing the heating coil capacity (55 kW).
- **Water flow:** Prolong the line ⑤ down to the water flow axis ⑥ at the bottom of the graphic (0.68 l/s).
- **Water pressure drop:** Draw the line ⑦ from the point where the line ⑥ crosses the black curve to the pressure drop axis (9.2 kPa).

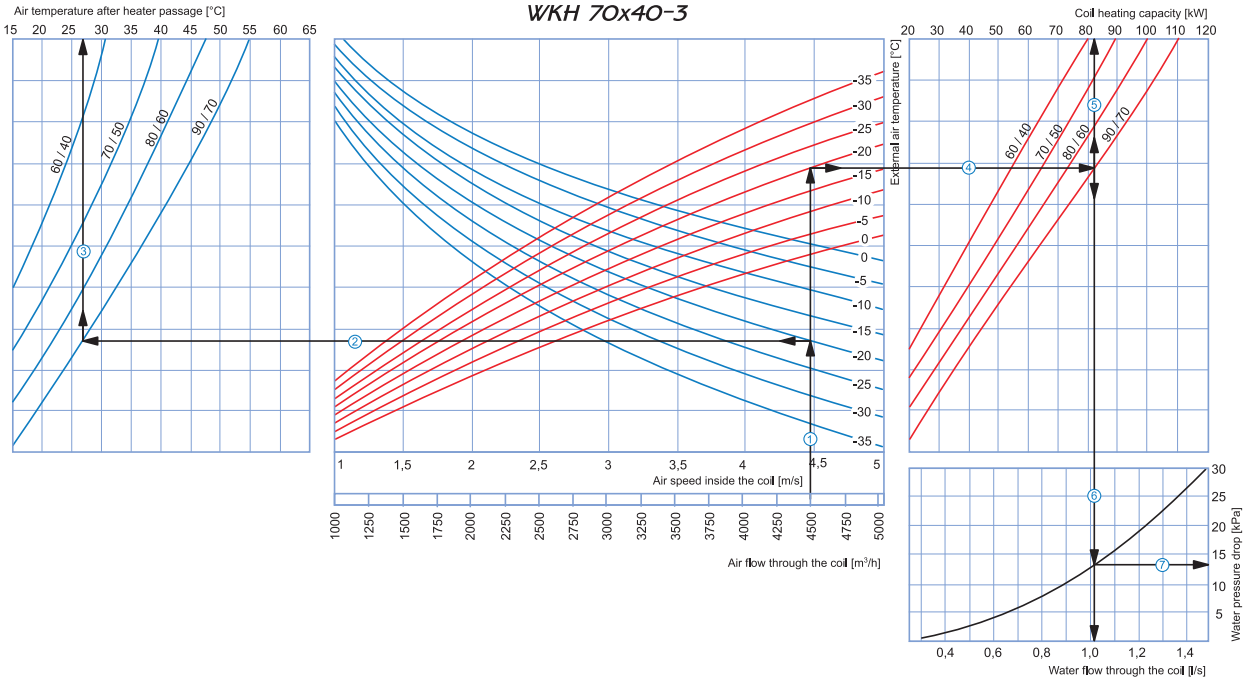

How to use water heater diagrams

System Parameters: Air flow = 4500 m³/h. Outside air temperature =-20°C. Water temperature (in/out) = 90/70 °C.

- **Air Speed inside coil:** Starting from 4500 m³/h on the air flow scale draw a vertical line ①. This line crosses the air speed axis and shows a value of about 4.45 m/s.
- **Supply air temperature:** Prolong the line ① up to the point where it crosses the outside air temperature (blue curve, e.g. -20°C); then draw a horizontal line ② from this point to the left until it crosses the water in/out temperature curve (e.g. 90/70 °C). From this point draw a vertical line ③ to the supply air temperature axis on top of the graphic (+27°C).
- **Heating coil capacity:** Prolong the line ① up to the point where it crosses the outside air temperature (e.g. -20°C, red curve) and draw a horizontal line ④ from this point to the right until it crosses the water in/out temperature curve (e.g., 90/70 °C). From here draw a vertical line ⑤ up to the scale representing the heating coil capacity (82 kW).
- **Water flow:** Prolong the line ⑤ down to the water flow axis ⑥ at the bottom of the graphic (1.02 l/s).
- **Water pressure drop:** Draw the line ⑦ from the point where the line ⑥ crosses the black curve to the pressure drop axis (13 kPa).

Water heaters calculation diagram

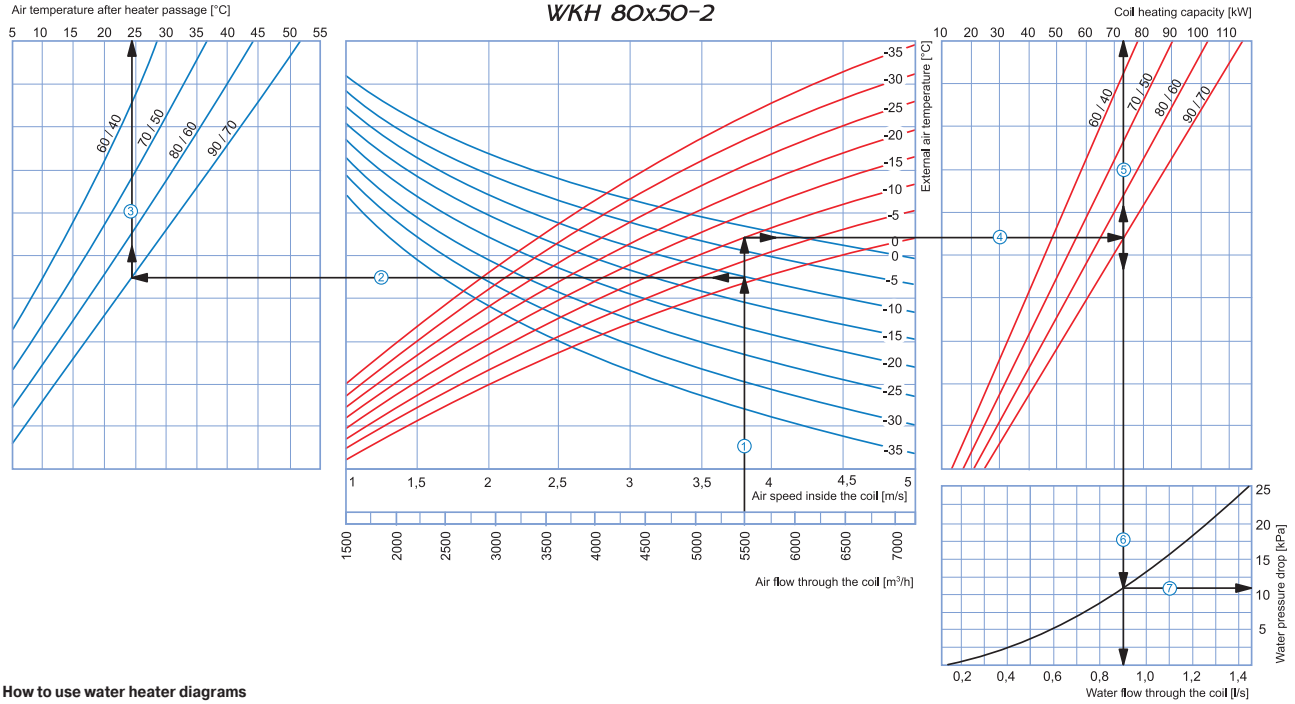

How to use water heater diagrams

System Parameters: Air flow = 5500m³/h. Outside air temperature =-10°C. Water temperature (in/out) = 90/70 °C.

- **Air Speed inside coil:** Starting from 5500 m³/h on the air flow scale draw a vertical line ①. This line crosses the air speed axis and shows a value of about 3.8 m/s.
- **Supply air temperature:** Prolong the line ① up to the point where it crosses the outside air temperature (blue curve, e.g. -10°C); then draw a horizontal line ② from this point to the left until it crosses the water in/out temperature curve (e.g. 90/70 °C). From this point draw a vertical line ③ to the supply air temperature axis on top of the graphic (+24.5°C).
- **Heating coil capacity:** Prolong the line ① up to the point where it crosses the outside air temperature (e.g. -10°C, red curve) and draw a horizontal line ④ from this point to the right until it crosses the water in/out temperature curve (e.g., 90/70 °C). From here draw a vertical line ⑤ up to the scale representing the heating coil capacity (73 kW).
- **Water flow:** Prolong the line ⑤ down to the water flow axis ⑥ at the bottom of the graphic (0.9 l/s).
- **Water pressure drop:** Draw the line ⑦ from the point where the line ⑥ crosses the black curve to the pressure drop axis (11 kPa).

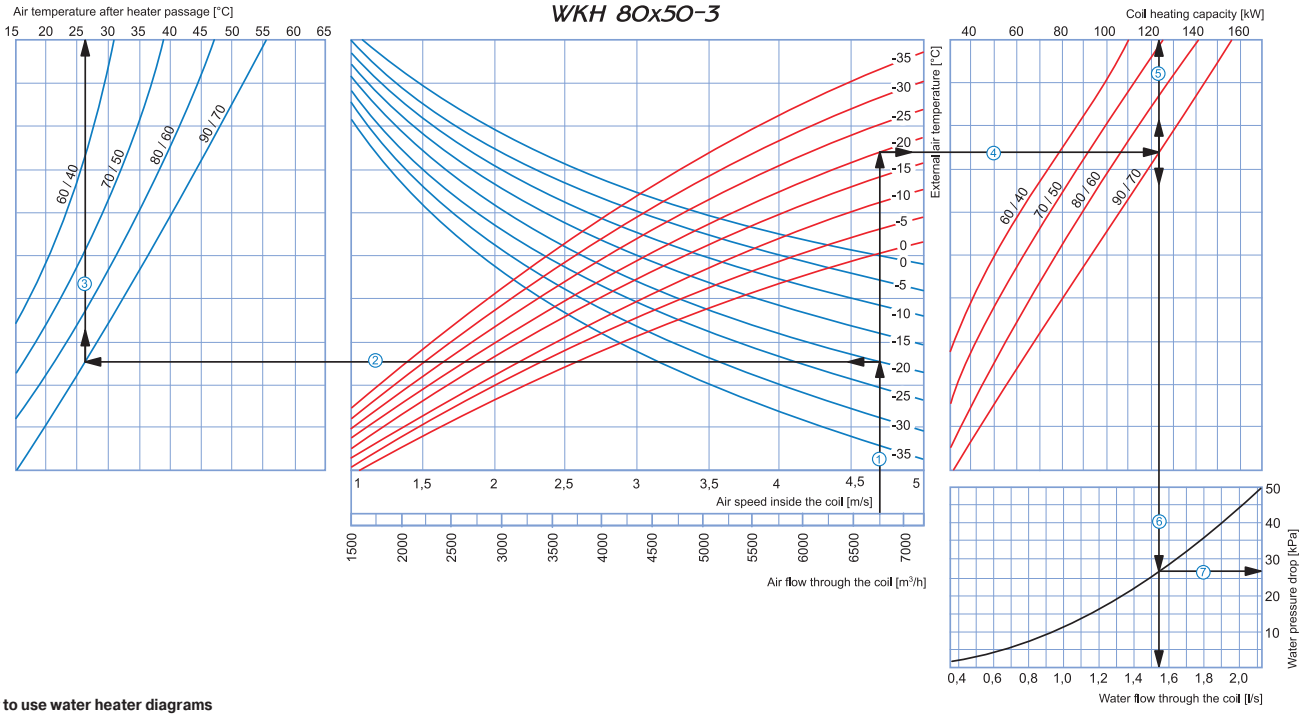

How to use water heater diagrams

System Parameters: Air flow = 6750 m³/h. Outside air temperature =-20°C. Water temperature (in/out) = 90/70 °C.

- **Air Speed inside coil:** Starting from 6750 m³/h on the air flow scale draw a vertical line ①. This line crosses the air speed axis and shows a value of about 4.7 m/s.
- **Supply air temperature:** Prolong the line ① up to the point where it crosses the outside air temperature (blue curve, e.g. -20°C); then draw a horizontal line ② from this point to the left until it crosses the water in/out temperature curve (e.g. 90/70 °C). From this point draw a vertical line ③ to the supply air temperature axis on top of the graphic (+26°C).
- **Heating coil capacity:** Prolong the line ① up to the point where it crosses the outside air temperature (e.g. -20°C, red curve) and draw a horizontal line ④ from this point to the right until it crosses the water in/out temperature curve (e.g., 90/70 °C). From here draw a vertical line ⑤ up to the scale representing the heating coil capacity (123 kW).
- **Water flow:** Prolong the line ⑤ down to the water flow axis ⑥ at the bottom of the graphic (1.54 l/s).
- **Water pressure drop:** Draw the line ⑦ from the point where the line ⑥ crosses the black curve to the pressure drop axis (27 kPa).

Water heaters calculation diagram

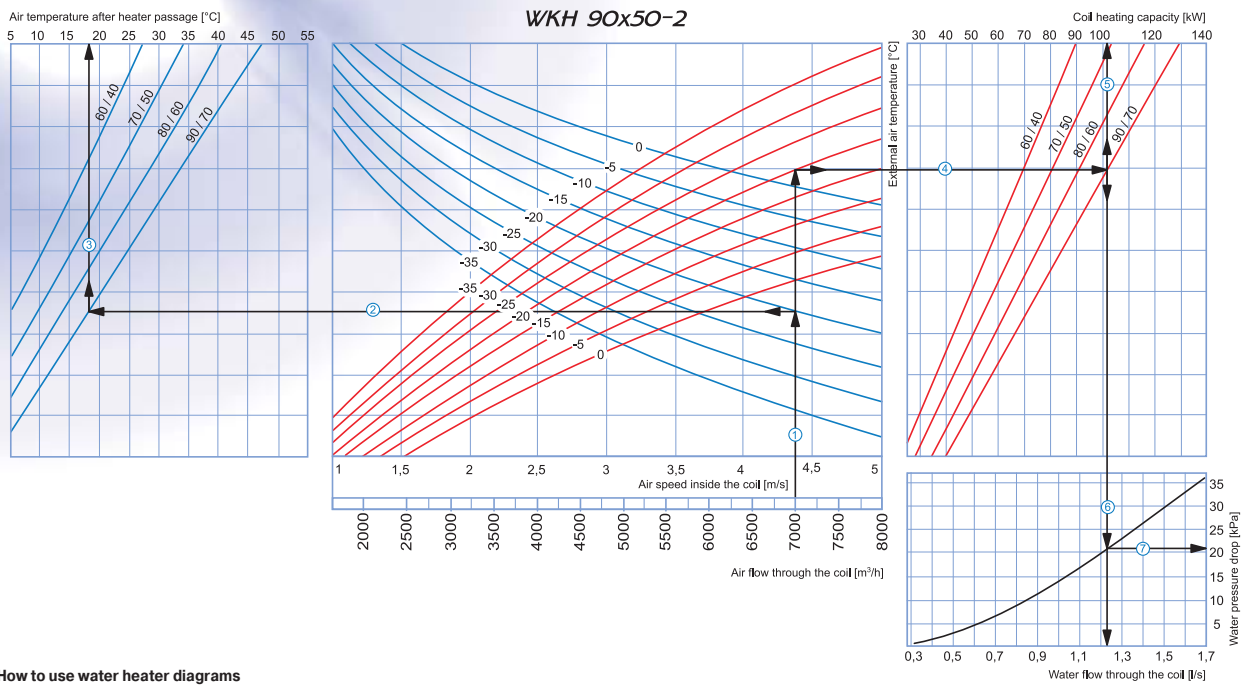

How to use water heater diagrams

System Parameters: Air flow = 7000 m³/h. Outside air temperature =-20°C. Water temperature (in/out) = 90/70 °C.

- **Air Speed inside coil:** Starting from 7000 m³/h on the air flow scale draw a vertical line ①. This line crosses the air speed axis and shows a value of about 4.4 m/s.
- **Supply air temperature:** Prolong the line ① up to the point where it crosses the outside air temperature (blue curve, e.g. -20°C); then draw a horizontal line ② from this point to the left until it crosses the water in/out temperature curve (e.g. 90/70 °C). From this point draw a vertical line ③ to the supply air temperature axis on top of the graphic (+18°C).
- **Heating coil capacity:** Prolong the line ① up to the point where it crosses the outside air temperature (e.g. -20°C, red curve) and draw a horizontal line ④ from this point to the right until it crosses the water in/out temperature curve (e.g., 90/70 °C). From here draw a vertical line ⑤ up to the scale representing the heating coil capacity (102 kW).
- **Water flow:** Prolong the line ⑤ down to the water flow axis ⑥ at the bottom of the graphic (1.23 l/s).
- **Water pressure drop:** Draw the line ⑦ from the point where the line ⑥ crosses the black curve to the pressure drop axis (21 kPa).

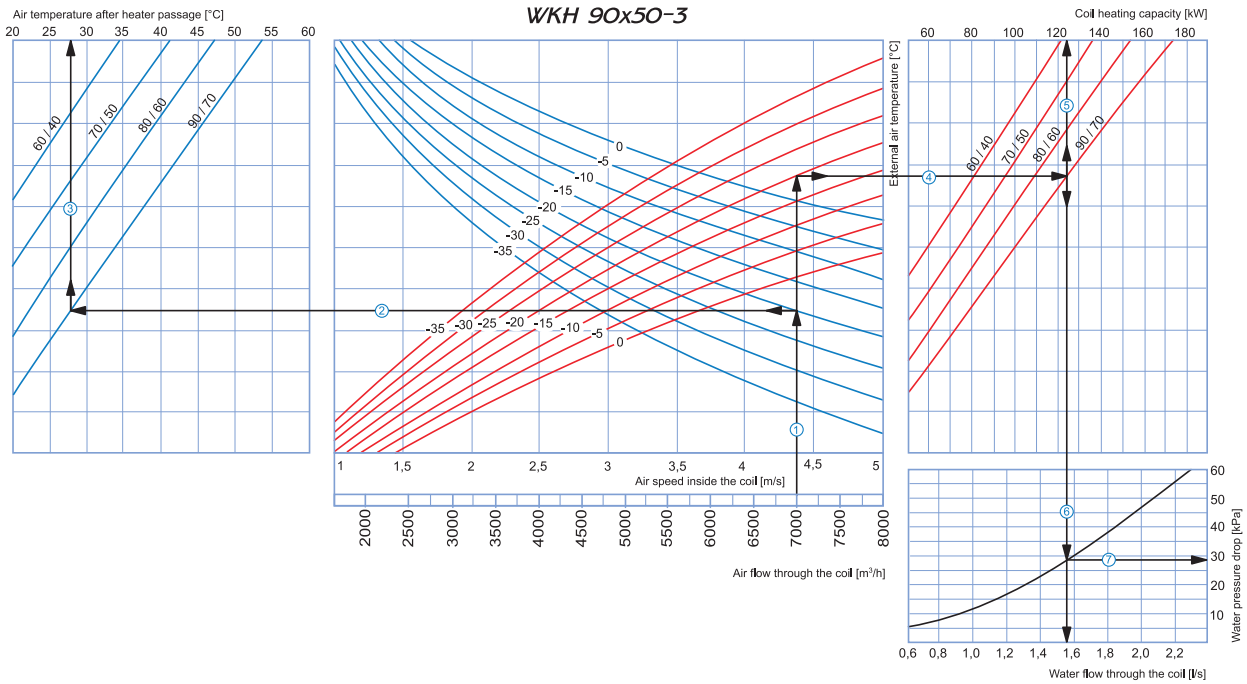

How to use water heater diagrams

System Parameters: Air flow = 7000 m³/h. Outside air temperature =-20°C. Water temperature (in/out) = 90/70 °C.

- **Air Speed inside coil:** Starting from 7000 m³/h on the air flow scale draw a vertical line ①. This line crosses the air speed axis and shows a value of about 4.4 m/s.
- **Supply air temperature:** Prolong the line ① up to the point where it crosses the outside air temperature (blue curve, e.g. -20°C); then draw a horizontal line ② from this point to the left until it crosses the water in/out temperature curve (e.g. 90/70 °C). From this point draw a vertical line ③ to the supply air temperature axis on top of the graphic (+28°C).
- **Heating coil capacity:** Prolong the line ① up to the point where it crosses the outside air temperature (e.g. -20°C, red curve) and draw a horizontal line ④ from this point to the right until it crosses the water in/out temperature curve (e.g., 90/70 °C). From here draw a vertical line ⑤ up to the scale representing the heating coil capacity (124 kW).
- **Water flow:** Prolong the line ⑤ down to the water flow axis ⑥ at the bottom of the graphic (1.55 l/s).
- **Water pressure drop:** Draw the line ⑦ from the point where the line ⑥ crosses the black curve to the pressure drop axis (28 kPa).

Water heaters calculation diagram

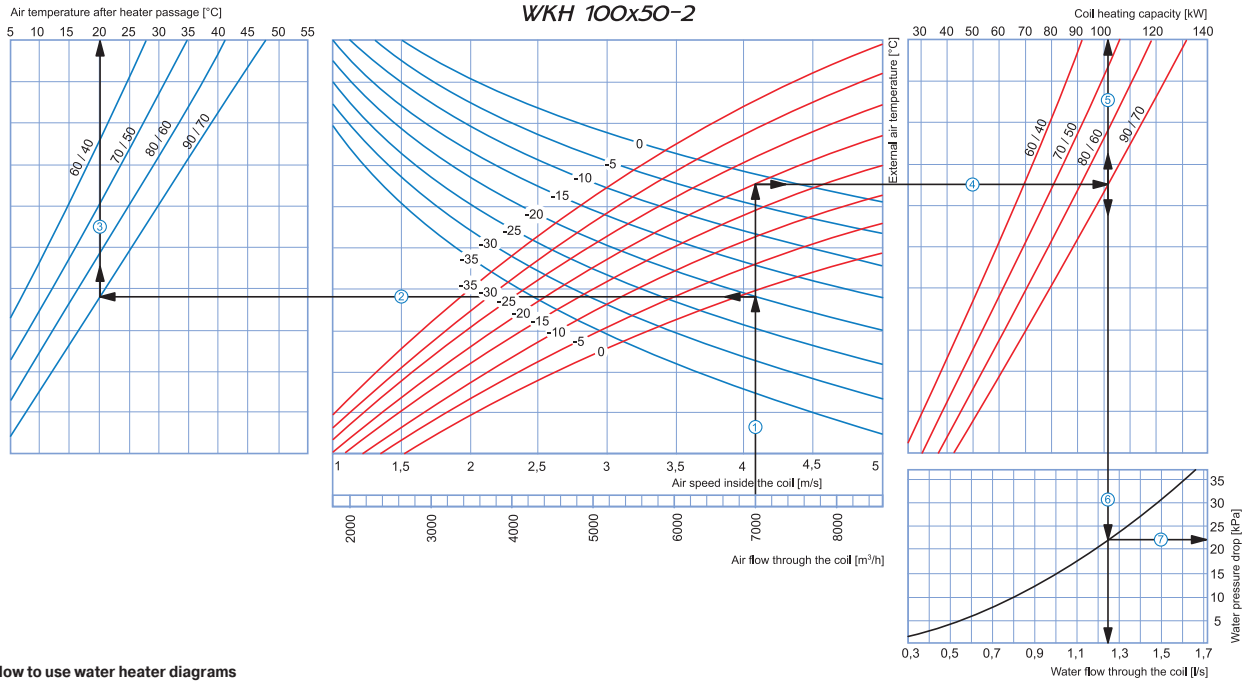

How to use water heater diagrams

System Parameters: Air flow = 7000m³/h. Outside air temperature =-20°C. Water temperature (in/out) = 90/70 °C.

- **Air Speed inside coil:** Starting from 7000 m³/h on the air flow scale draw a vertical line ①. This line crosses the air speed axis and shows a value of about 4.1 m/s.
- **Supply air temperature:** Prolong the line ① up to the point where it crosses the outside air temperature (blue curve, e.g. -20°C); then draw a horizontal line ② from this point to the left until it crosses the water in/out temperature curve (e.g. 90/70 °C). From this point draw a vertical line ③ to the supply air temperature axis on top of the graphic (+20°C).
- **Heating coil capacity:** Prolong the line ① up to the point where it crosses the outside air temperature (e.g. -20°C, red curve) and draw a horizontal line ④ from this point to the right until it crosses the water in/out temperature curve (e.g., 90/70 °C). From here draw a vertical line ⑤ up to the scale representing the heating coil capacity (101 kW).
- **Water flow:** Prolong the line ⑤ down to the water flow axis ⑥ at the bottom of the graphic (1.25 l/s).
- **Water pressure drop:** Draw the line ⑦ from the point where the line ⑥ crosses the black curve to the pressure drop axis (22 kPa).

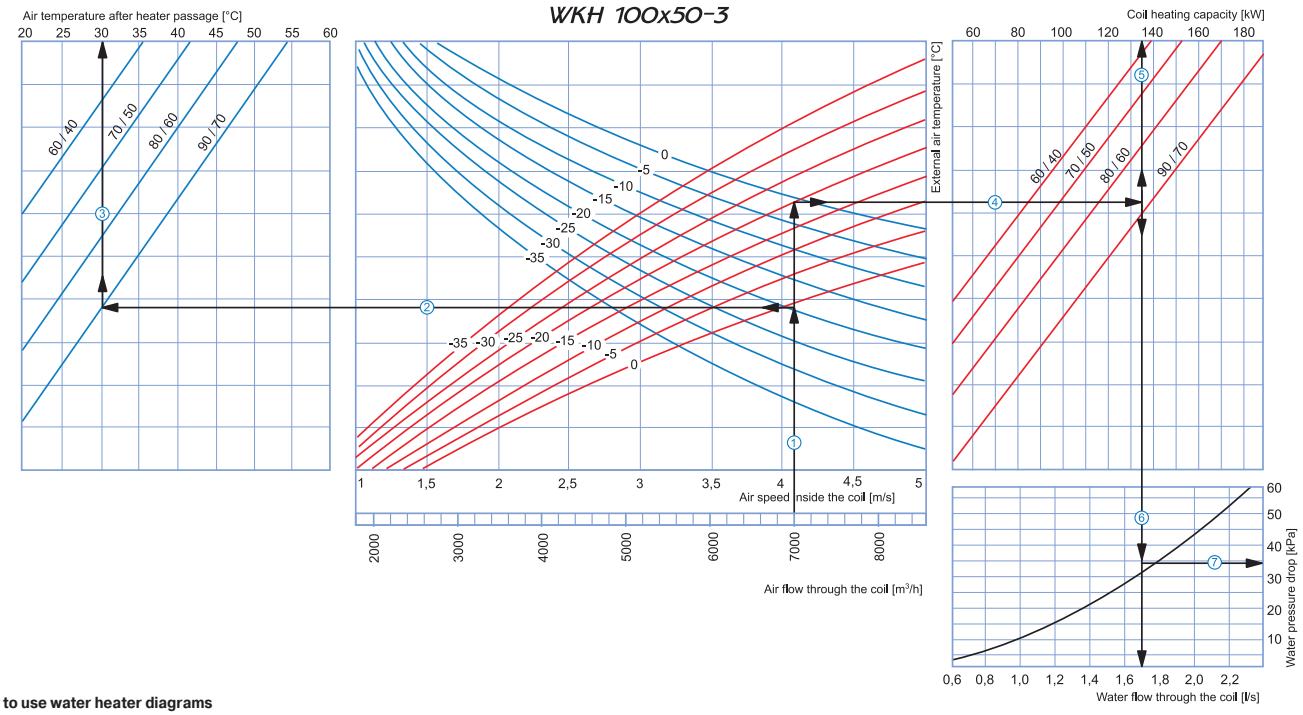

How to use water heater diagrams

System Parameters: Air flow = 7000 m³/h. Outside air temperature =-20°C. Water temperature (in/out) = 90/70 °C.

- **Air Speed inside coil:** Starting from 7000 m³/h on the air flow scale draw a vertical line ①. This line crosses the air speed axis and shows a value of about 4.1 m/s.
- **Supply air temperature:** Prolong the line ① up to the point where it crosses the outside air temperature (blue curve, e.g. -20°C); then draw a horizontal line ② from this point to the left until it crosses the water in/out temperature curve (e.g. 90/70 °C). From this point draw a vertical line ③ to the supply air temperature axis on top of the graphic (+30°C).
- **Heating coil capacity:** Prolong the line ① up to the point where it crosses the outside air temperature (e.g. -20°C, red curve) and draw a horizontal line ④ from this point to the right until it crosses the water in/out temperature curve (e.g., 90/70 °C). From here draw a vertical line ⑤ up to the scale representing the heating coil capacity (135 kW).
- **Water flow:** Prolong the line ⑤ down to the water flow axis ⑥ at the bottom of the graphic (1.7 l/s).
- **Water pressure drop:** Draw the line ⑦ from the point where the line ⑥ crosses the black curve to the pressure drop axis (34 kPa).

Duct water cooling units

KWK

for rectangular air ducts

Application

- Supply air cooling for ventilation systems in various premises.
- Suitable for installation into supply ventilation or into air handling units to provide air cooling.

Design

- Galvanized steel casing.
- The cooling elements are made of copper tubes and aluminum plates.
- Available in three-coil modifications and rated for maximum operating pressure 1.5 MPa (15 bar).
- Polypropylene droplet separator and drain pan for condensate drainage and removal included.
- Droplet separator is efficient at an air flow not exceeding 4 m/s.

Mounting

- Only horizontal mounting by means of flanged connection. Air evacuation and condensate drainage must be provided.
- Air filter installation upstream of the cooling unit to prevent the unit soiling.
- Installation position must ensure uniform air flow distribution in the section.
- Mounting upstream or downstream of the supply fan. The minimum air duct length downstream of the fan must be 1-1.5 m to ensure air flow stabilization.
- The maximum cooling capacity is attained if the cooling unit is connected on counter-flow basis. The attached charts are valid for counter-flow connection.
- If water is used as a cooling agent, the cooling unit is suitable for indoor use only with the ambient temperature not below 0 °C.
- If antifreezing solution, for example, ethylene glycol solution, is used as a cooling agent, the cooling unit is suitable for outdoor use as well.
- While mounting the cooling unit provide condensate drainage through the U-trap. The U-trap height must be selected with respect to the total fan pressure, refer to the table and diagram below.

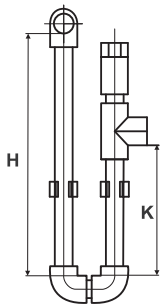

H [mm]	K [mm]	P [Pa]
100	55	600
200	105	1100
260	140	1400

H – U-trap height
K – drain height
P – total fan pressure

- For a proper and safe operation of the cooling unit it should be connected to a control system for integral control and automatic cooling capacity regulation.

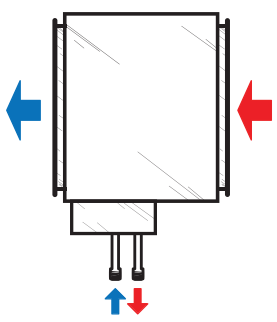

Counter air flow connection

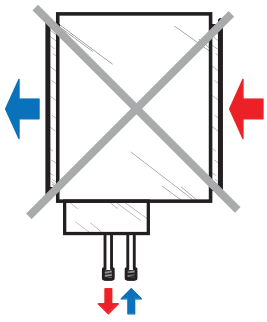

Air flow streamwise connection

Overall dimensions

Model	Dimensions [mm]										
	B	B1	B2	B3	H	H1	H2	H3	H4	L	K
KWK 40x20-3	400	420	440	470	200	220	240	295	124	56	G 3/4''
KWK 50x25-3	500	520	540	570	250	270	290	345	188	45	G 3/4''
KWK 50x30-3	500	520	540	570	300	320	340	395	252	56	G 3/4''
KWK 60x30-3	600	620	640	670	300	320	340	395	252	56	G 3/4''
KWK 60x35-3	600	620	640	670	350	370	390	445	268	56	G 3/4''
KWK 70x40-3	700	720	740	770	400	420	440	495	314	56	G 3/4''
KWK 80x50-3	800	820	840	870	500	520	540	595	442	56	G 3/4''
KWK 90x50-3	900	920	940	970	500	520	540	595	442	56	G 3/4''
KWK 100x50-3	1000	1020	1040	1070	500	520	540	595	442	56	G 1''

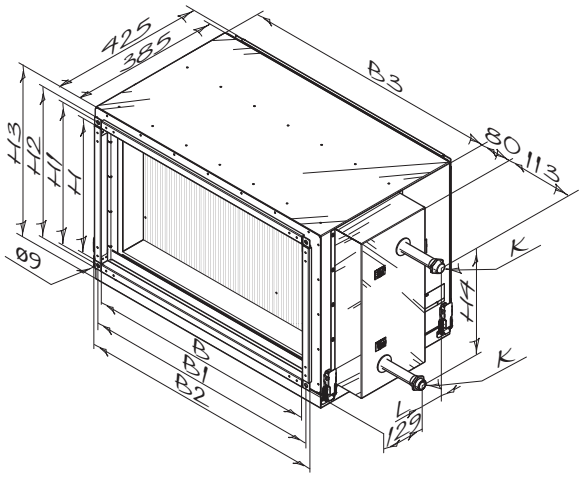

Pressure losses in water cooling coils

KWK

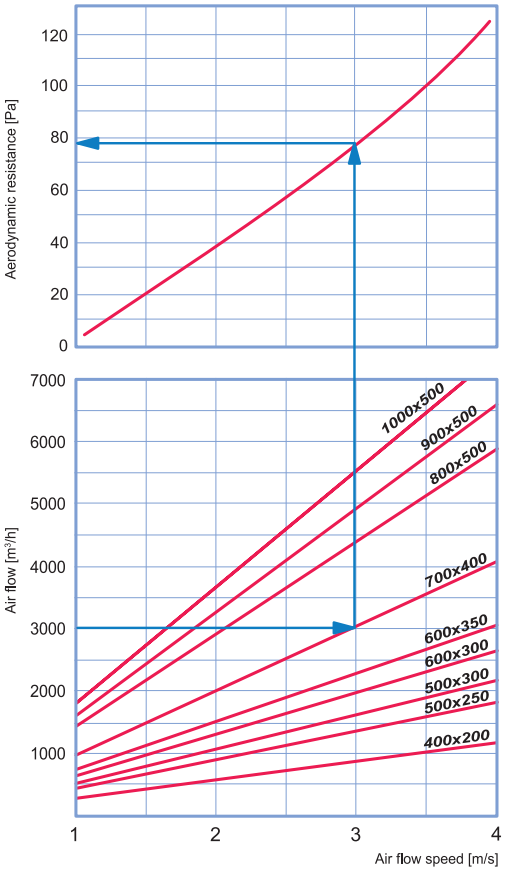

DX cooling unit calculation diagram

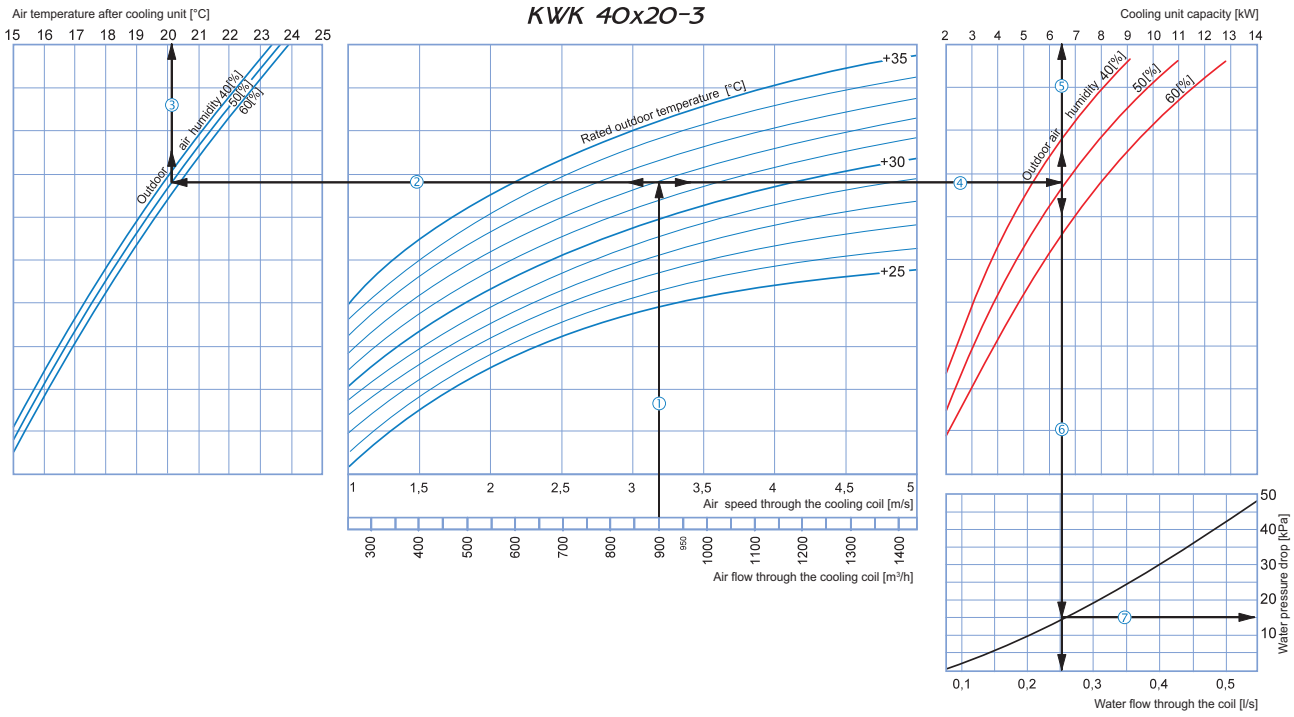

How to use water cooling coil diagrams:

Sample parameters: Air flow = 900 m³/h, air flow speed through the cooling coil = 3.2 m/s ①.

- **Supply air temperature:** prolong the line of air flow (e.g. 900 m³/h) ① up to the point where it crosses the outside air temperature (e.g. +32°C); then draw a horizontal line ② from this point to the left until it crosses the outdoor air humidity curve (e.g. 50%). From this point draw a vertical line ③ to the supply air temperature axis on top of the graphic (20.1 °C).
- **Cooling coil capacity:** Prolong the line ① up to the point where it crosses the outside air temperature (e.g. +32°C) and draw a horizontal line ④ from this point to the right until it crosses the outdoor air humidity curve (e.g. 50%). From here draw a vertical line ⑤ up to the scale representing the cooling coil capacity (6.5 kW).
- **Water flow through the coil:** Prolong the line ⑤ down to the water flow axis ⑥ at the bottom of the graphic (0.26 l/s).
- **Water pressure drop:** Draw the line ⑦ from the point where the line ⑥ crosses the black curve to the pressure drop axis (15.0 kPa).

Water cooling unit calculation diagram

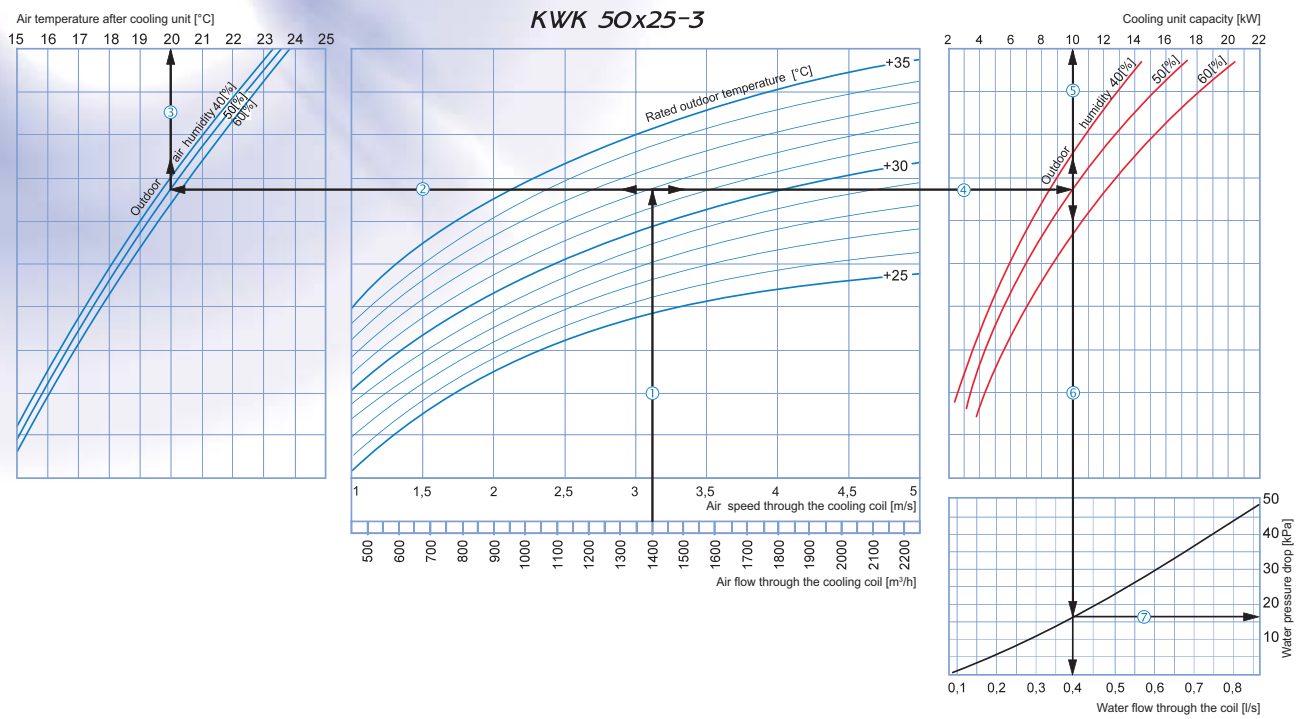

How to use water cooling coil diagrams:

Sample parameters: Air flow = 1400 m³/h, air flow speed through the cooling coil = 3.1 m/s ①.

- **Supply air temperature:** prolong the line of air flow (e.g. 1400 m³/h) ① up to the point where it crosses the outside air temperature (e.g. +32°C); then draw a horizontal line ② from this point to the left until it crosses the outdoor air humidity curve (e.g. 50%). From this point draw a vertical line ③ to the supply air temperature axis on top of the graphic (20 °C).
- **Cooling coil capacity:** Prolong the line ① up to the point where it crosses the outside air temperature (e.g. +32°C) and draw a horizontal line ④ from this point to the right until it crosses the outdoor air humidity curve (e.g. 50%). From here draw a vertical line ⑤ up to the scale representing the cooling coil capacity (10.0 kW).
- **Water flow through the coil:** Prolong the line ⑤ down to the water flow axis ⑥ at the bottom of the graphic (0.4 l/s).
- **Water pressure drop:** Draw the line ⑦ from the point where the line ⑥ crosses the black curve to the pressure drop axis (17.0 kPa).

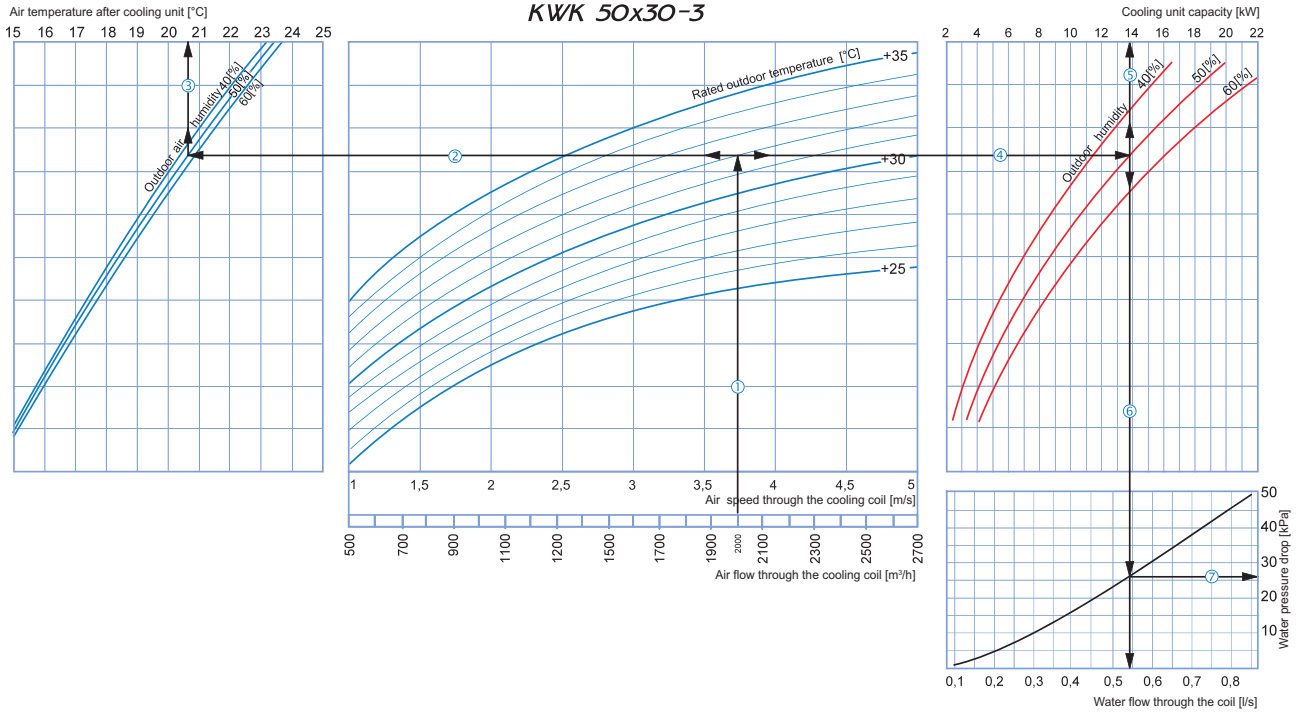

How to use water cooling coil diagrams:

Sample parameters: Air flow = 2000 m³/h, air flow speed through the cooling coil = 3.75 m/s ①.

- **Supply air temperature:** prolong the line of air flow (e.g. 2000 m³/h) ① up to the point where it crosses the outside air temperature (e.g. +32°C); then draw a horizontal line ② from this point to the left until it crosses the outdoor air humidity curve (e.g. 50%). From this point draw a vertical line ③ to the supply air temperature axis on top of the graphic (20.6 °C).
- **Cooling coil capacity:** Prolong the line ① up to the point where it crosses the outside air temperature (e.g. +32°C) and draw a horizontal line ④ from this point to the right until it crosses the outdoor air humidity curve (e.g. 50%). From here draw a vertical line ⑤ up to the scale representing the cooling coil capacity (13.6 kW).
- **Water flow through the coil:** Prolong the line ⑤ down to the water flow axis ⑥ at the bottom of the graphic (0.54 l/s).
- **Water pressure drop:** Draw the line ⑦ from the point where the line ⑥ crosses the black curve to the pressure drop axis (27 kPa).

Water cooling unit calculation diagram

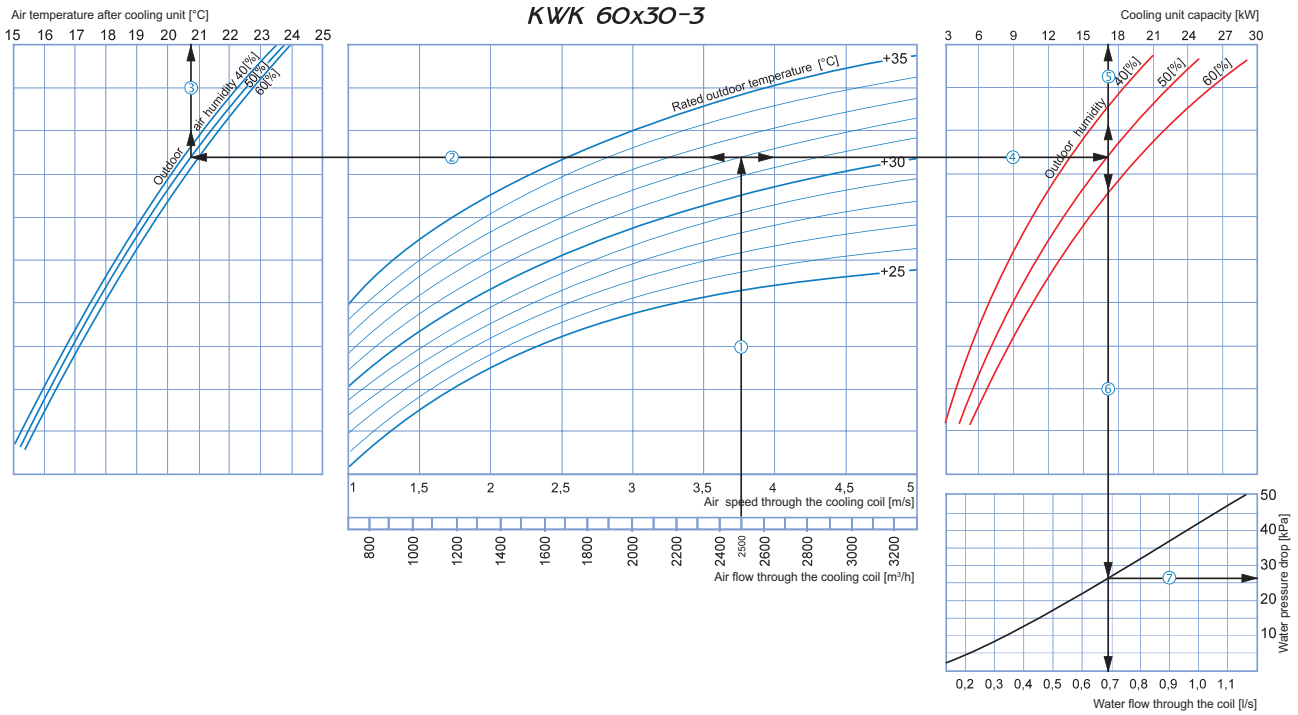

How to use water cooling coil diagrams:

Sample parameters: Air flow = 2500 m³/h, air flow speed through the cooling coil = 3.75 m/s ①.

- **Supply air temperature:** prolong the line of air flow (e.g. 2500 m³/h) ① up to the point where it crosses the outside air temperature (e.g. +32°C); then draw a horizontal line ② from this point to the left until it crosses the outdoor air humidity curve (e.g. 50%). From this point draw a vertical line ③ to the supply air temperature axis on top of the graphic (20.7 °C).
- **Cooling coil capacity:** Prolong the line ① up to the point where it crosses the outside air temperature (e.g. +32°C) and draw a horizontal line ④ from this point to the right until it crosses the outdoor air humidity curve (e.g. 50%). From here draw a vertical line ⑤ up to the scale representing the cooling coil capacity (17.0 kW).
- **Water flow through the coil:** Prolong the line ⑤ down to the water flow axis ⑥ at the bottom of the graphic (0.68 l/s).
- **Water pressure drop:** Draw the line ⑦ from the point where the line ⑥ crosses the black curve to the pressure drop axis (27 kPa).

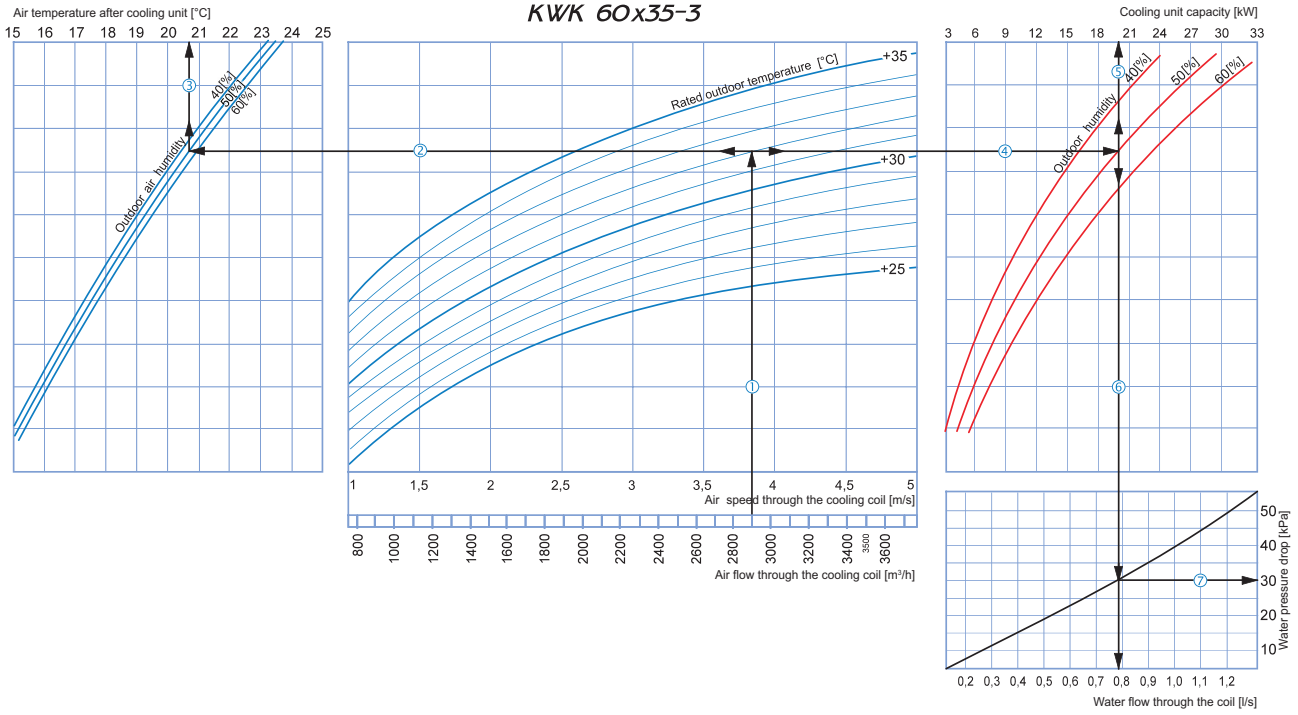

How to use water cooling coil diagrams:

Sample parameters: Air flow = 2850 m³/h, air flow speed through the cooling coil = 3.85 m/s ①.

- **Supply air temperature:** prolong the line of air flow (e.g. 2850 m³/h) ① up to the point where it crosses the outside air temperature (e.g. +32°C); then draw a horizontal line ② from this point to the left until it crosses the outdoor air humidity curve (e.g. 50%). From this point draw a vertical line ③ to the supply air temperature axis on top of the graphic (20.7 °C).
- **Cooling coil capacity:** Prolong the line ① up to the point where it crosses the outside air temperature (e.g. +32°C) and draw a horizontal line ④ from this point to the right until it crosses the outdoor air humidity curve (e.g. 50%). From here draw a vertical line ⑤ up to the scale representing the cooling coil capacity (19.8 kW).
- **Water flow through the coil:** Prolong the line ⑤ down to the water flow axis ⑥ at the bottom of the graphic (0.75 l/s).
- **Water pressure drop**: Draw the line ⑦ from the point where the line ⑥ crosses the black curve to the pressure drop axis (30 kPa).

Water cooling unit calculation diagram

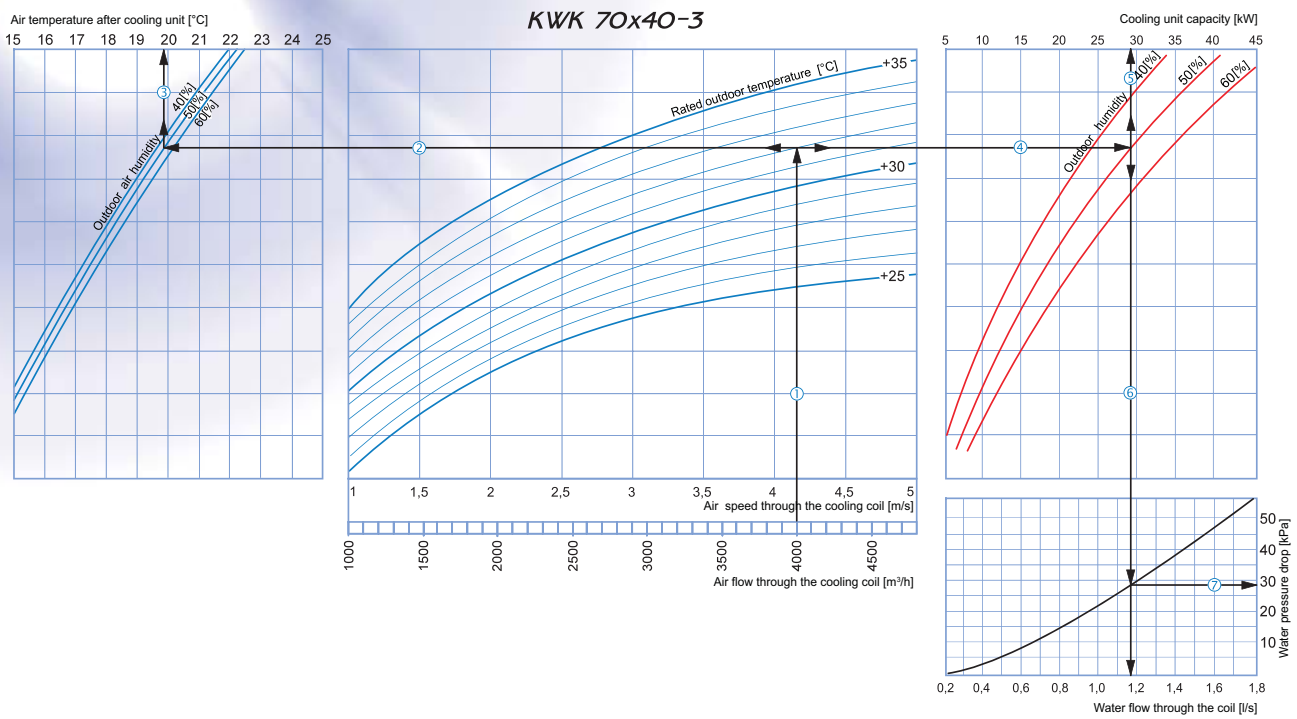

How to use water cooling coil diagrams:

Sample parameters: Air flow = 4000 m³/h, air flow speed through the cooling coil = 4.15 m/s ①.

- **Supply air temperature:** prolong the line of air flow (e.g. 4000 m³/h) ① up to the point where it crosses the outside air temperature (e.g. +32°C); then draw a horizontal line ② from this point to the left until it crosses the outdoor air humidity curve (e.g. 50%). From this point draw a vertical line ③ to the supply air temperature axis on top of the graphic (19.8 °C).
- **Cooling coil capacity:** Prolong the line ① up to the point where it crosses the outside air temperature (e.g. +32°C) and draw a horizontal line ④ from this point to the right until it crosses the outdoor air humidity curve (e.g. 50%). From here draw a vertical line ⑤ up to the scale representing the cooling coil capacity (28.5 kW).
- **Water flow through the coil:** Prolong the line ⑤ down to the water flow axis ⑥ at the bottom of the graphic (1.14 l/s).
- **Water pressure drop:** Draw the line ⑦ from the point where the line ⑥ crosses the black curve to the pressure drop axis (28 kPa).

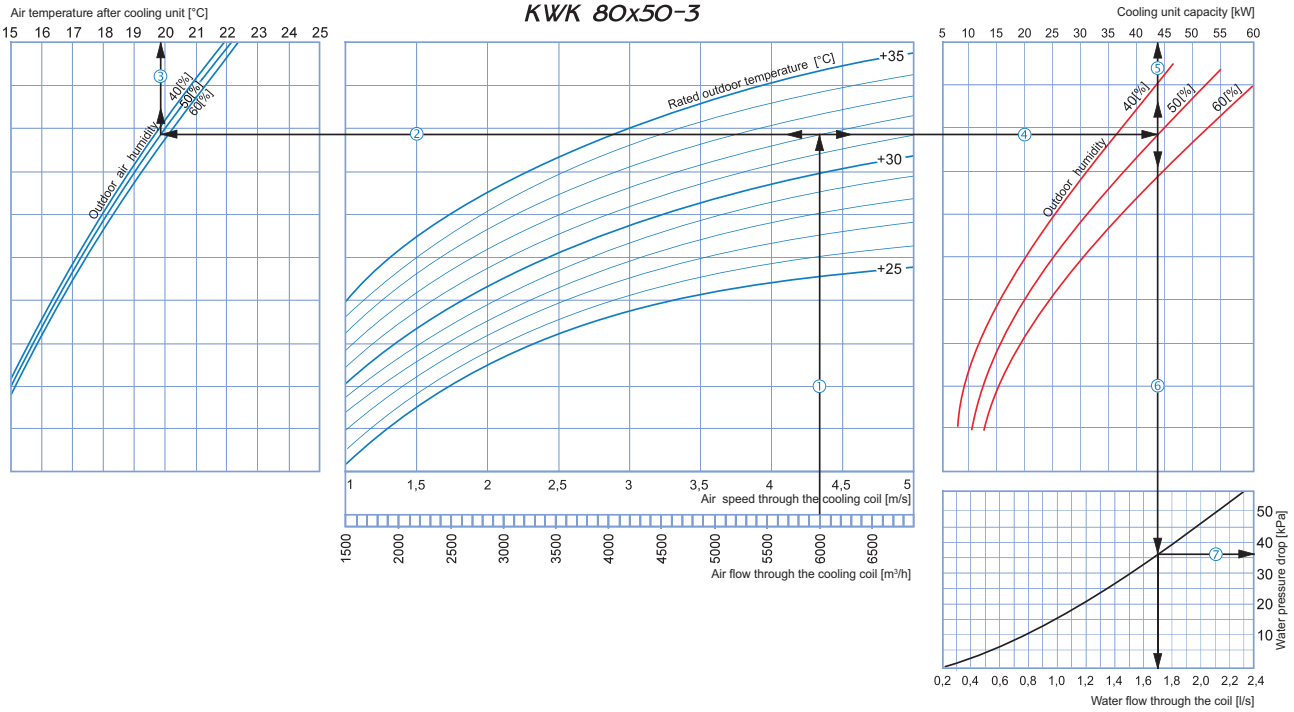

How to use water cooling coil diagrams:

Sample parameters: Air flow = 6000 m³/h, air flow speed through the cooling coil = 4.35 m/s ①.

- **Supply air temperature:** prolong the line of air flow (e.g. 6000 m³/h) ① up to the point where it crosses the outside air temperature (e.g. +32°C); then draw a horizontal line ② from this point to the left until it crosses the outdoor air humidity curve (e.g. 50%). From this point draw a vertical line ③ to the supply air temperature axis on top of the graphic (19.9 °C).
- **Cooling coil capacity:** Prolong the line ① up to the point where it crosses the outside air temperature (e.g. +32°C) and draw a horizontal line ④ from this point to the right until it crosses the outdoor air humidity curve (e.g. 50%). From here draw a vertical line ⑤ up to the scale representing the cooling coil capacity (43 kW).
- **Water flow through the coil:** Prolong the line ⑤ down to the water flow axis ⑥ at the bottom of the graphic (1.7 l/s).
- **Water pressure drop:** Draw the line ⑦ from the point where the line ⑥ crosses the black curve to the pressure drop axis (36 kPa).

Water cooling unit calculation diagram

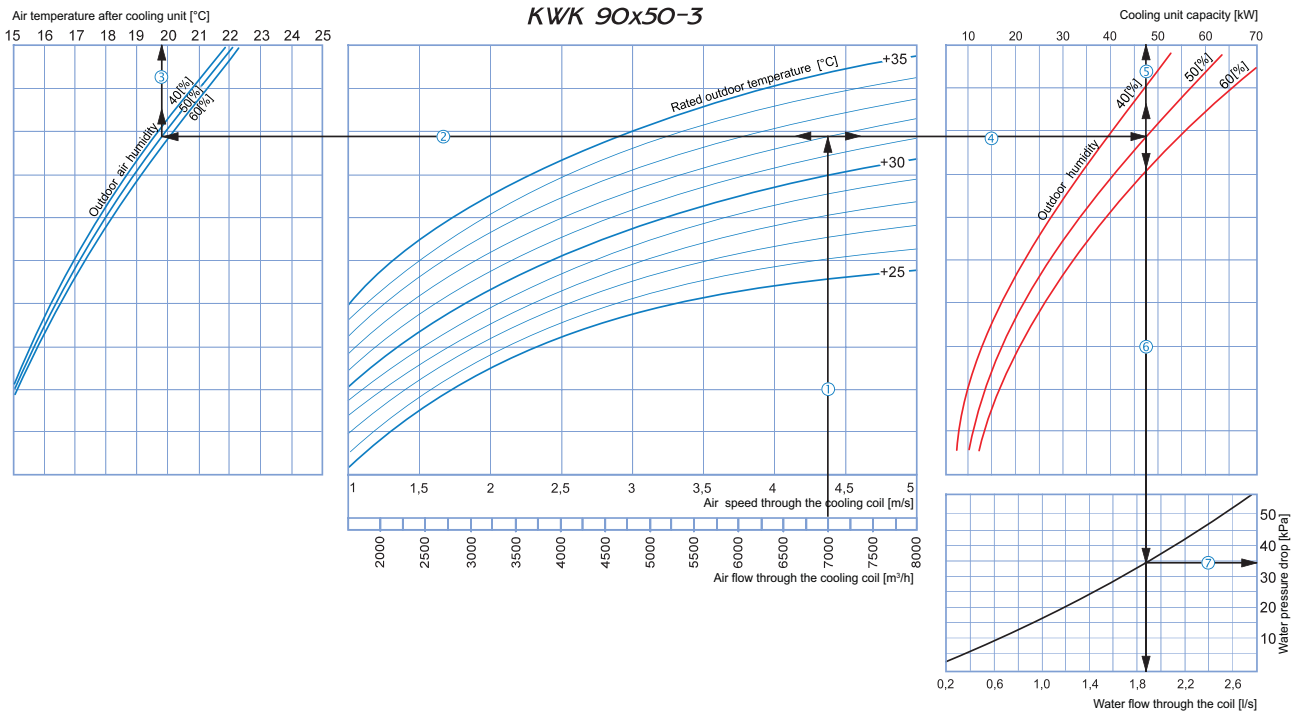

How to use water cooling coil diagrams:

Sample parameters: Air flow = 7000 m³/h, air flow speed through the cooling coil = 4.4 m/s ①.

- **Supply air temperature:** prolong the line of air flow (e.g. 7000 m³/h) ① up to the point where it crosses the outside air temperature (e.g. +32°C); then draw a horizontal line ② from this point to the left until it crosses the outdoor air humidity curve (e.g. 50%). From this point draw a vertical line ③ to the supply air temperature axis on top of the graphic (19.7 °C).
- **Cooling coil capacity:** Prolong the line ① up to the point where it crosses the outside air temperature (e.g. +32°C) and draw a horizontal line ④ from this point to the right until it crosses the outdoor air humidity curve (e.g. 50%). From here draw a vertical line ⑤ up to the scale representing the cooling coil capacity (47 kW).
- **Water flow through the coil:** Prolong the line ⑤ down to the water flow axis ⑥ at the bottom of the graphic (1.9 l/s).
- **Water pressure drop:** Draw the line ⑦ from the point where the line ⑥ crosses the black curve to the pressure drop axis (34 kPa).

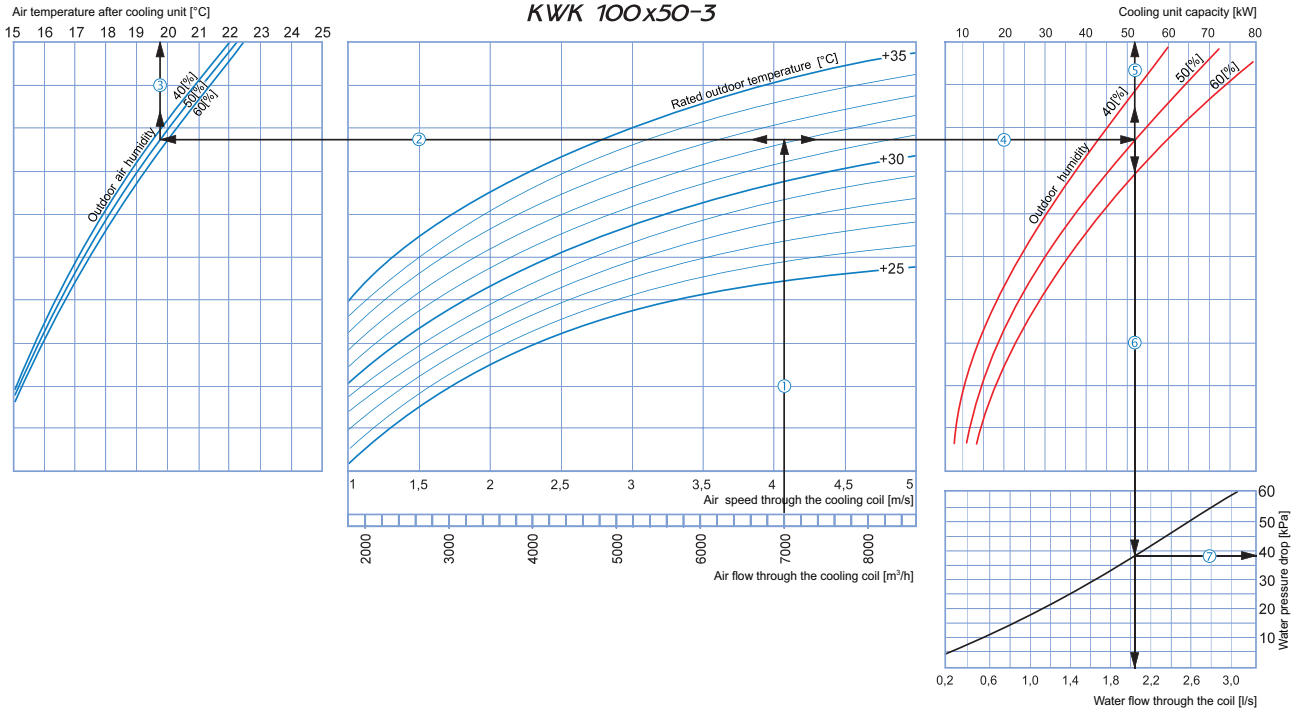

How to use water cooling coil diagrams:

Sample parameters: Air flow = 7000 m³/h, air flow speed through the cooling coil = 4.1 m/s ①.

- **Supply air temperature:** prolong the line of air flow (e.g. 7000 m³/h) ① up to the point where it crosses the outside air temperature (e.g. +32°C); then draw a horizontal line ② from this point to the left until it crosses the outdoor air humidity curve (e.g. 50%). From this point draw a vertical line ③ to the supply air temperature axis on top of the graphic (19.6 °C).
- **Cooling coil capacity:** Prolong the line ① up to the point where it crosses the outside air temperature (e.g. +32°C) and draw a horizontal line ④ from this point to the right until it crosses the outdoor air humidity curve (e.g. 50%). From here draw a vertical line ⑤ up to the scale representing the cooling coil capacity (52 kW).
- **Water flow through the coil:** Prolong the line ⑤ down to the water flow axis ⑥ at the bottom of the graphic (2.05 l/s).
- **Water pressure drop:** Draw the line ⑦ from the point where the line ⑥ crosses the black curve to the pressure drop axis (37 kPa).

Duct DX cooling units

KFK

for rectangular air ducts

Use

- Supply air cooling for ventilation systems in various premises.
- Suitable for installation into supply or air handling units to provide air cooling.

Design

- Galvanized steel casing .
- The cooling elements are made of copper tubes and aluminum plates.
- Available in three-coil modifications and rated for operation with R123, R134a, R152a, R404a, R407c, R410a, R507, R12, R22 refrigerants.
- Polypropylene droplet separator and drain pan for condensate drainage and removal included.
- Droplet separator operates efficiently at air flow below 4 m/s.

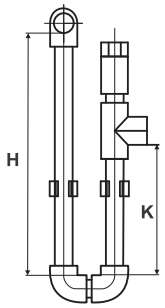

H [mm]	K [mm]	P [Pa]
100	55	600
200	105	1100
260	140	1400

H – U-trap height
K – drainage height
P – total fan pressure

Mounting

- Only horizontal mounting by means of flanged connection. Condensate drainage must be provided.
- Air filter must be installed upstream of the cooling unit to prevent the unit soiling.
- Mounting position must ensure uniform air flow distribution through the entire cross section.
- Installation upstream or downstream of the supply fan. The minimum air duct length downstream of the fan must be 1-1.5 m to ensure air flow stabilization.
- The maximum cooling capacity is attained if the cooling unit is connected on counter-flow basis. The attached charts are valid for counter-flow connection.
- While mounting the cooling unit provide condensate drainage through the U-trap. The U-trap height must be selected with respect to the total fan pressure, refer to the table and diagram below.

- For a proper and safe operation of the cooling unit it should be connected to a control system for integral control and automatic cooling capacity regulation.

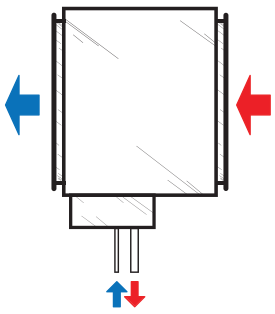

Counter air flow connection

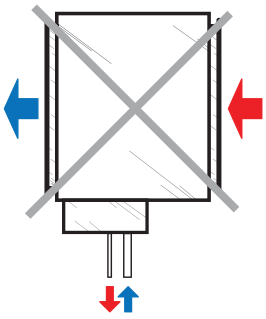

Air flow streamwise connection

Overall dimensions

Model	Dimensions [mm]											
	B	B1	B2	B3	H	H1	H2	H3	H4	L	ØD1	ØD2
KFK 40x20-3	400	420	440	470	200	220	240	295	103	44	12	22
KFK 50x25-3	500	520	540	570	250	270	290	345	155	44	12	22
KFK 50x30-3	500	520	540	570	300	320	340	395	210	33	12	22
KFK 60x30-3	600	620	640	670	300	320	340	395	199	44	18	28
KFK 60x35-3	600	620	640	670	350	370	390	445	199	44	18	28
KFK 70x40-3	700	720	740	770	400	420	440	495	224	44	22	28
KFK 80x50-3	800	820	840	870	500	520	540	595	340	44	22	28
KFK 90x50-3	900	920	940	970	500	520	540	595	340	44	22	28
KFK 100x50-3	1000	1020	1040	1070	500	520	540	595	325	44	22	28

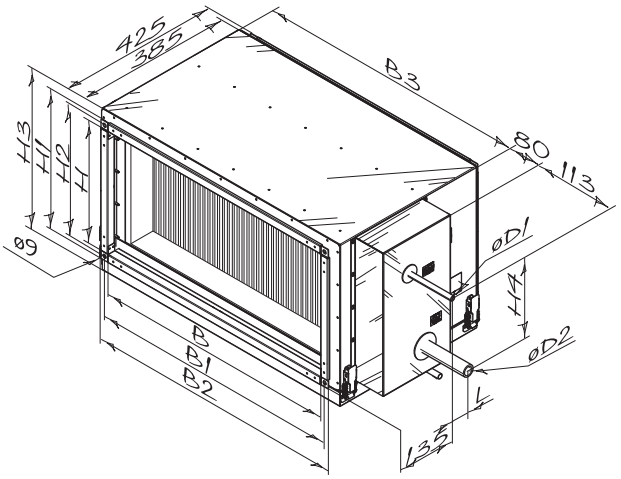

Air pressure losses in DX cooling coils

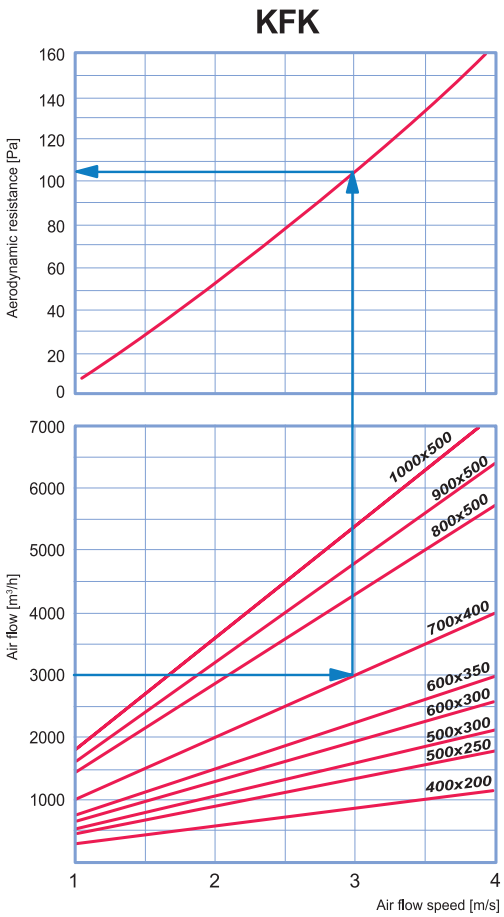

Water cooling unit calculation diagram

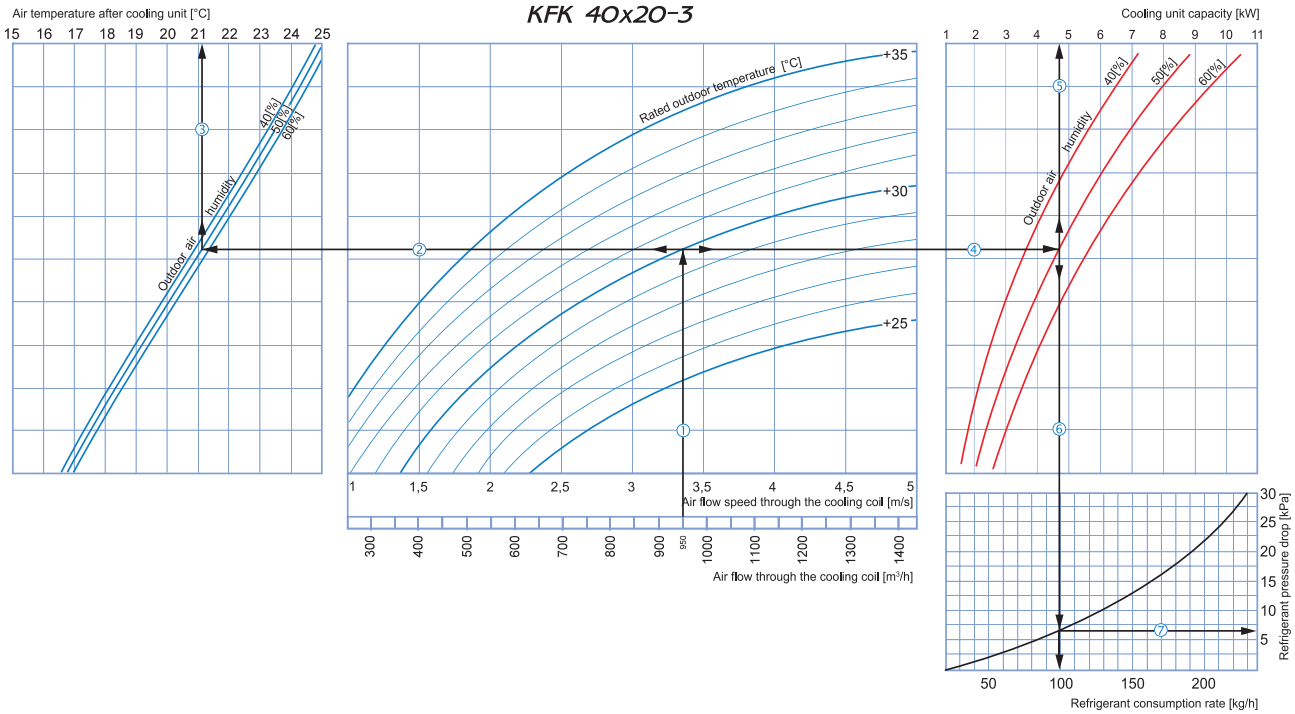

How to use DX cooling coil diagrams:

Sample parameters: Air flow = 950 m³/h, air flow speed through the cooling coil = 3.35 m/s ①.

- **Supply air temperature:** prolong the line of air flow (e.g. 950 m³/h) ① up to the point where it crosses the outside air temperature (e.g. +30°C); then draw a horizontal line ② from this point to the left until it crosses the outdoor air humidity curve (e.g. 50%). From this point draw a vertical line ③ to the air temperature after cooling unit axis on top of the graphic (+21.1 °C).
- **Cooling coil capacity:** Prolong the line ① up to the point where it crosses the outside air temperature (e.g. +30°C) and draw a horizontal line ④ from this point to the right until it crosses the outdoor air humidity curve (e.g. 50%). From here draw a vertical line ⑤ up to the scale representing the cooling coil capacity (4.7 kW).
- **Refrigerant consumption through the coil:** Prolong the line ⑤ down to the refrigerant consumption axis ⑥ at the bottom of the graphic (100 kg/h).
- **Refrigerant pressure drop:** Draw the line ⑦ from the point where the line ⑥ crosses the curve to the refrigerant drop axis (6.5 kPa).

Water cooling unit calculation diagram

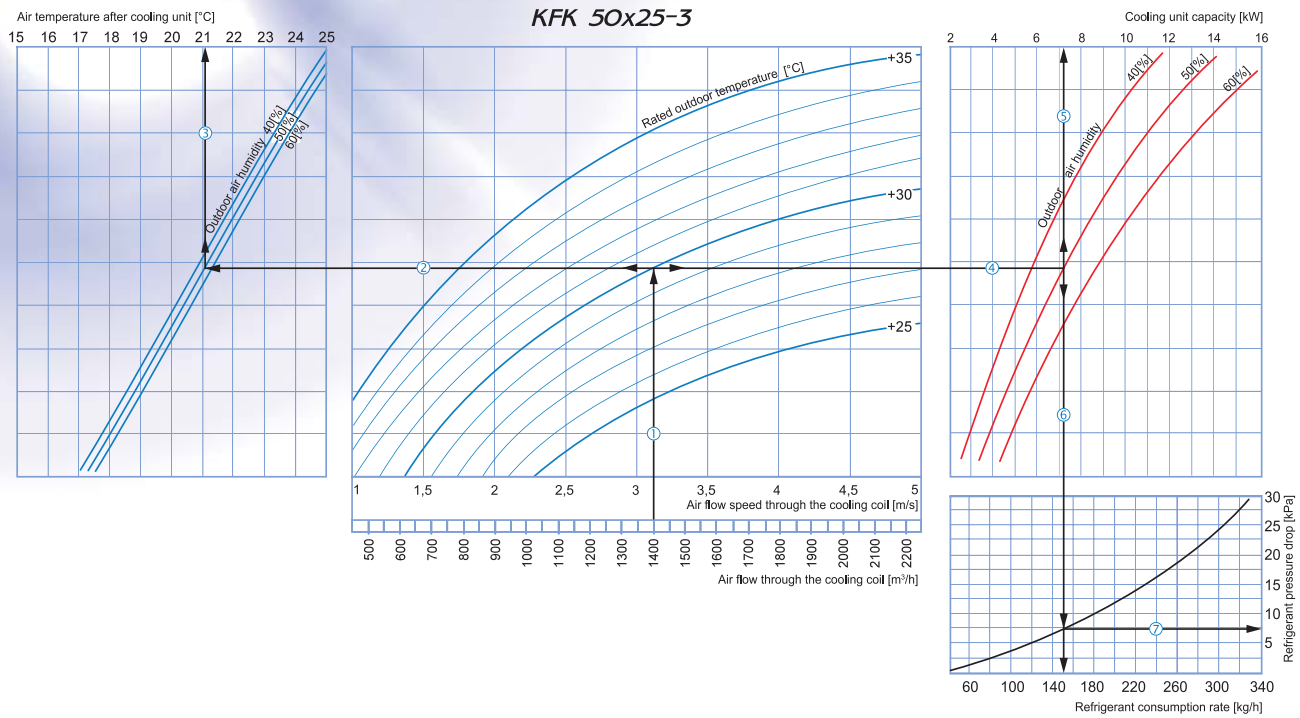

How to use DX cooling coil diagrams:

Sample parameters: Air flow = 1400 m³/h, air flow speed through the cooling coil = 3.1 m/s ①.

- **Supply air temperature:** prolong the line of air flow (e.g. 1400 m³/h) ① up to the point where it crosses the outside air temperature (e.g. +30°C); then draw a horizontal line ② from this point to the left until it crosses the outdoor air humidity curve (e.g. 50%). From this point draw a vertical line ③ to the air temperature after cooling unit axis on top of the graphic (+21.1 °C).
- **Cooling coil capacity:** Prolong the line ① up to the point where it crosses the outside air temperature (e.g. +30°C) and draw a horizontal line ④ from this point to the right until it crosses the outdoor air humidity curve (e.g. 50%). From here draw a vertical line ⑤ up to the scale representing the cooling coil capacity (7.2 kW).
- **Refrigerant consumption through the coil:** Prolong the line ⑤ down to the refrigerant consumption axis ⑥ at the bottom of the graphic (152 kg/h).
- **Refrigerant pressure drop:** Draw the line ⑦ from the point where the line ⑥ crosses the curve to the refrigerant drop axis (7.5 kPa).

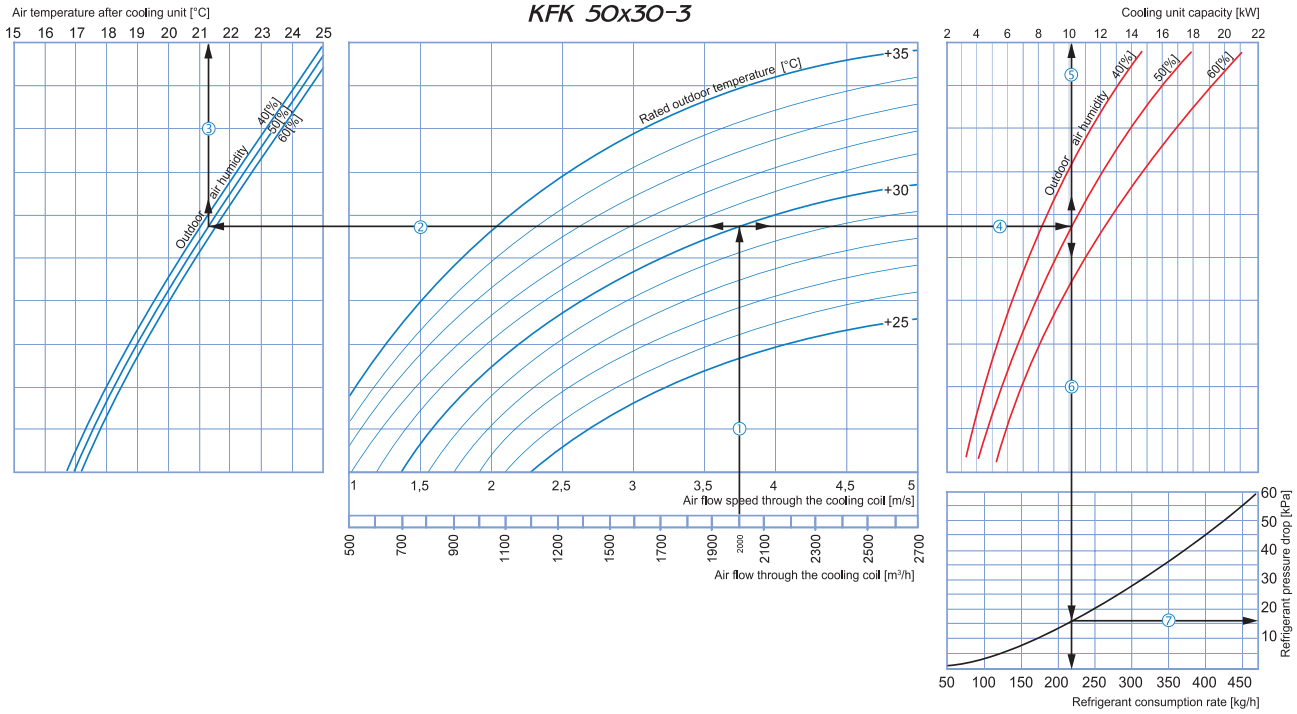

How to use DX cooling coil diagrams:

Sample parameters: Air flow = 2000 m³/h, air flow speed through the cooling coil = 3.75 m/s ①.

- **Supply air temperature:** prolong the line of air flow (e.g. 2000 m³/h) ① up to the point where it crosses the outside air temperature (e.g. +30°C); then draw a horizontal line ② from this point to the left until it crosses the outdoor air humidity curve (e.g. 50%). From this point draw a vertical line ③ to the air temperature after cooling unit axis on top of the graphic (+21.2 °C).
- **Cooling coil capacity:** Prolong the line ① up to the point where it crosses the outside air temperature (e.g. +30°C) and draw a horizontal line ④ from this point to the right until it crosses the outdoor air humidity curve (e.g. 50%). From here draw a vertical line ⑤ up to the scale representing the cooling coil capacity (10 kW).
- **Refrigerant consumption through the coil:** Prolong the line ⑤ down to the refrigerant consumption axis ⑥ at the bottom of the graphic (215 kg/h).
- **Refrigerant pressure drop:** Draw the line ⑦ from the point where the line ⑥ crosses the curve to the refrigerant drop axis (16 kPa).

Water cooling unit calculation diagram

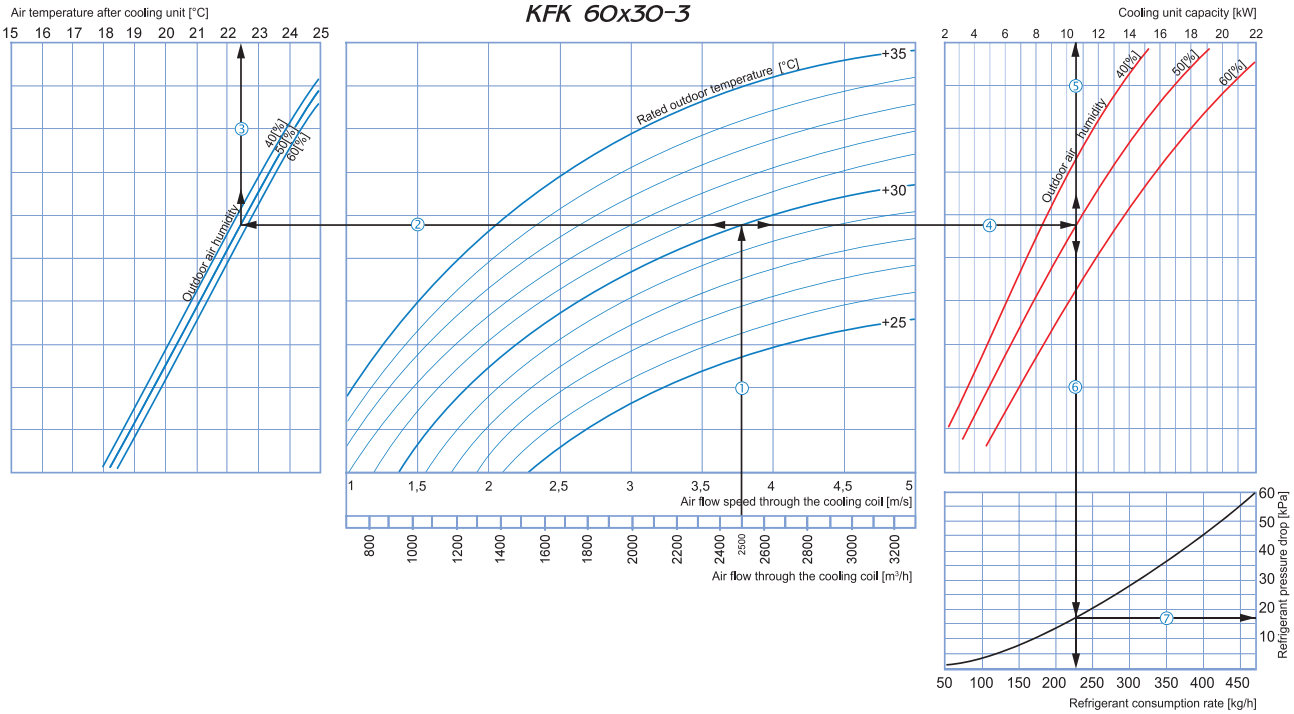

How to use DX cooling coil diagrams:

Sample parameters: Air flow = 2500 m³/h, air flow speed through the cooling coil = 3.75 m/s ①.

- **Supply air temperature:** prolong the line of air flow (e.g. 2500 m³/h) ① up to the point where it crosses the outside air temperature (e.g. +30°C); then draw a horizontal line ② from this point to the left until it crosses the outdoor air humidity curve (e.g. 50%). From this point draw a vertical line ③ to the air temperature after cooling unit axis on top of the graphic (+22.5 °C).
- **Cooling coil capacity:** Prolong the line ① up to the point where it crosses the outside air temperature (e.g. +30°C) and draw a horizontal line ④ from this point to the right until it crosses the outdoor air humidity curve (e.g. 50%). From here draw a vertical line ⑤ up to the scale representing the cooling coil capacity (10.5 kW).
- **Refrigerant consumption through the coil:** Prolong the line ⑤ down to the refrigerant consumption axis ⑥ at the bottom of the graphic (225 kg/h).
- **Refrigerant pressure drop:** Draw the line ⑦ from the point where the line ⑥ crosses the curve to the refrigerant drop axis (17 kPa).

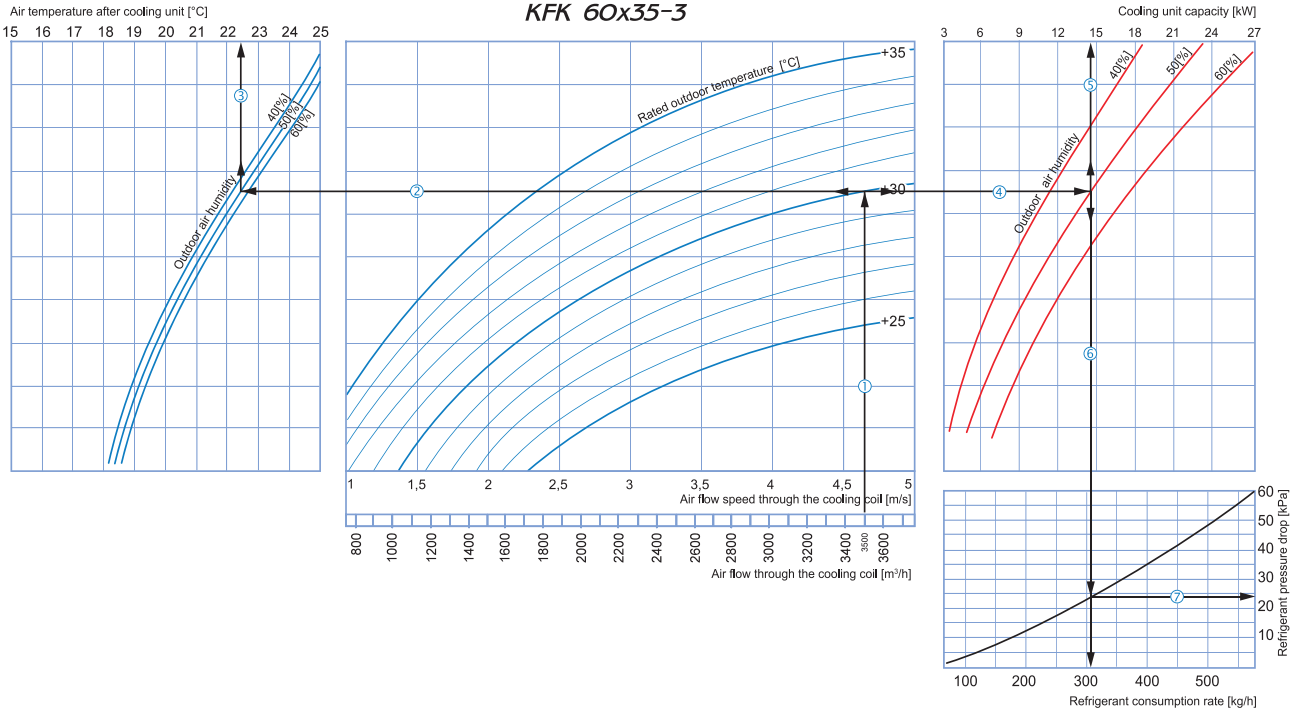

How to use DX cooling coil diagrams:

Sample parameters: Air flow = 3500 m³/h, air flow speed through the cooling coil = 4.65 m/s ①.

- **Supply air temperature:** prolong the line of air flow (e.g. 3500 m³/h) ① up to the point where it crosses the outside air temperature (e.g. +30°C); then draw a horizontal line ② from this point to the left until it crosses the outdoor air humidity curve (e.g. 50%). From this point draw a vertical line ③ to the air temperature after cooling unit axis on top of the graphic (+22.5 °C).
- **Cooling coil capacity:** Prolong the line ① up to the point where it crosses the outside air temperature (e.g. +30°C) and draw a horizontal line ④ from this point to the right until it crosses the outdoor air humidity curve (e.g. 50%). From here draw a vertical line ⑤ up to the scale representing the cooling coil capacity (14.5 kW).
- **Refrigerant consumption through the coil:** Prolong the line ⑤ down to the refrigerant consumption axis ⑥ at the bottom of the graphic (310 kg/h).
- **Refrigerant pressure drop:** Draw the line ⑦ from the point where the line ⑥ crosses the curve to the refrigerant drop axis (24 kPa).

Water cooling unit calculation diagram

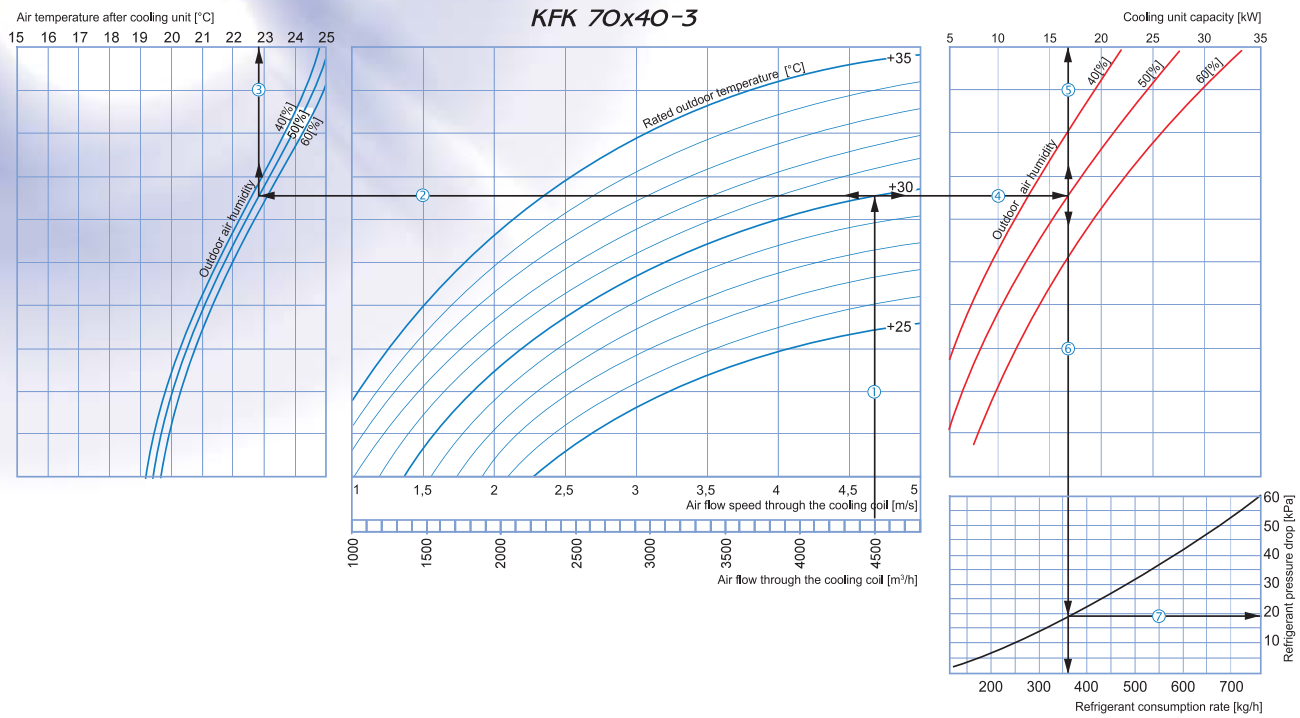

How to use DX cooling coil diagrams:

Sample parameters: Air flow = 4500 m³/h, air flow speed through the cooling coil = 4.7 m/s ①.

- **Supply air temperature:** prolong the line of air flow (e.g. 4500 m³/h) ① up to the point where it crosses the outside air temperature (e.g. +30°C); then draw a horizontal line ② from this point to the left until it crosses the outdoor air humidity curve (e.g. 50%). From this point draw a vertical line ③ to the air temperature after cooling unit axis on top of the graphic (+22.8 °C).
- **Cooling coil capacity:** Prolong the line ① up to the point where it crosses the outside air temperature (e.g. +30°C) and draw a horizontal line ④ from this point to the right until it crosses the outdoor air humidity curve (e.g. 50%). From here draw a vertical line ⑤ up to the scale representing the cooling coil capacity (17 kW).
- **Refrigerant consumption through the coil:** Prolong the line ⑤ down to the refrigerant consumption axis ⑥ at the bottom of the graphic (360 kg/h).
- **Refrigerant pressure drop:** Draw the line ⑦ from the point where the line ⑥ crosses the curve to the refrigerant drop axis (19 kPa).

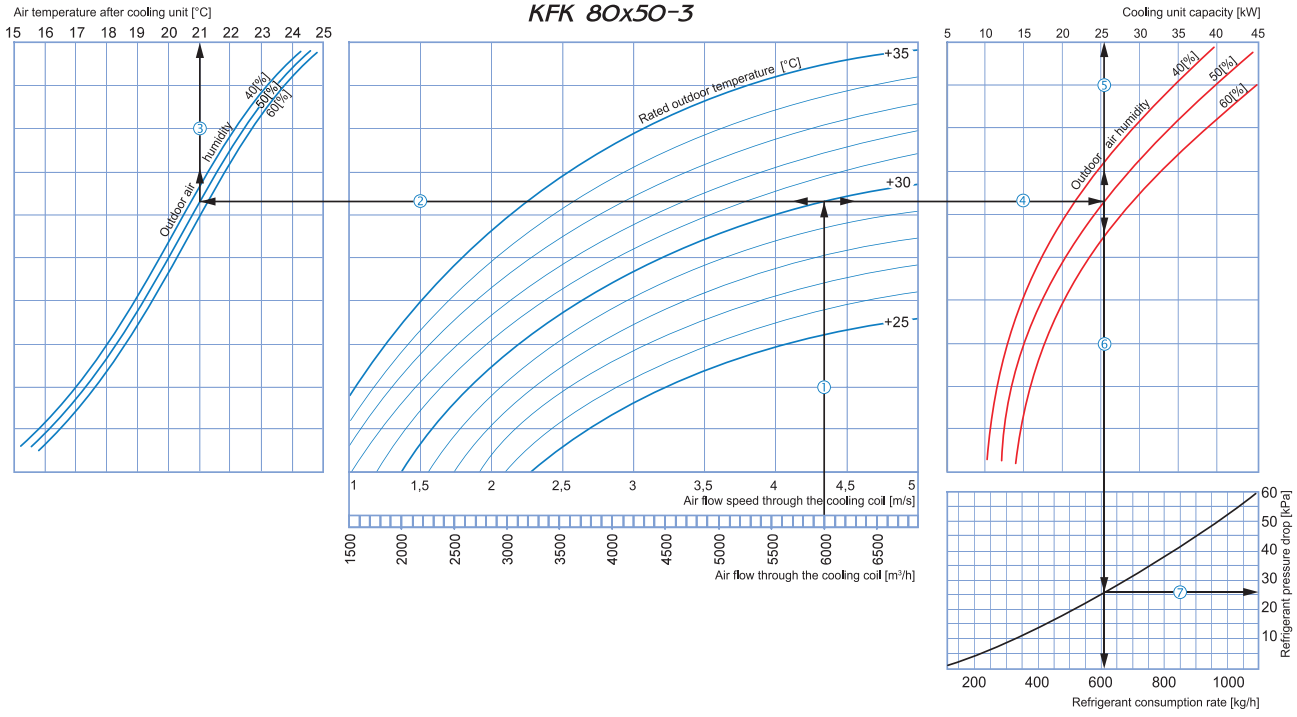

How to use DX cooling coil diagrams:

Sample parameters: Air flow = 6000 m³/h, air flow speed through the cooling coil = 4.35 m/s ①.

- **Supply air temperature:** prolong the line of air flow (e.g. 6000 m³/h) ① up to the point where it crosses the outside air temperature (e.g. +30°C); then draw a horizontal line ② from this point to the left until it crosses the outdoor air humidity curve (e.g. 50%). From this point draw a vertical line ③ to the air temperature after cooling unit axis on top of the graphic (+21.0 °C).
- **Cooling coil capacity:** Prolong the line ① up to the point where it crosses the outside air temperature (e.g. +30°C) and draw a horizontal line ④ from this point to the right until it crosses the outdoor air humidity curve (e.g. 50%). From here draw a vertical line ⑤ up to the scale representing the cooling coil capacity (25.5 kW).
- **Refrigerant consumption through the coil:** Prolong the line ⑤ down to the refrigerant consumption axis ⑥ at the bottom of the graphic (605 kg/h).
- **Refrigerant pressure drop:** Draw the line ⑦ from the point where the line ⑥ crosses the curve to the refrigerant drop axis (26 kPa).

Water cooling unit calculation diagram

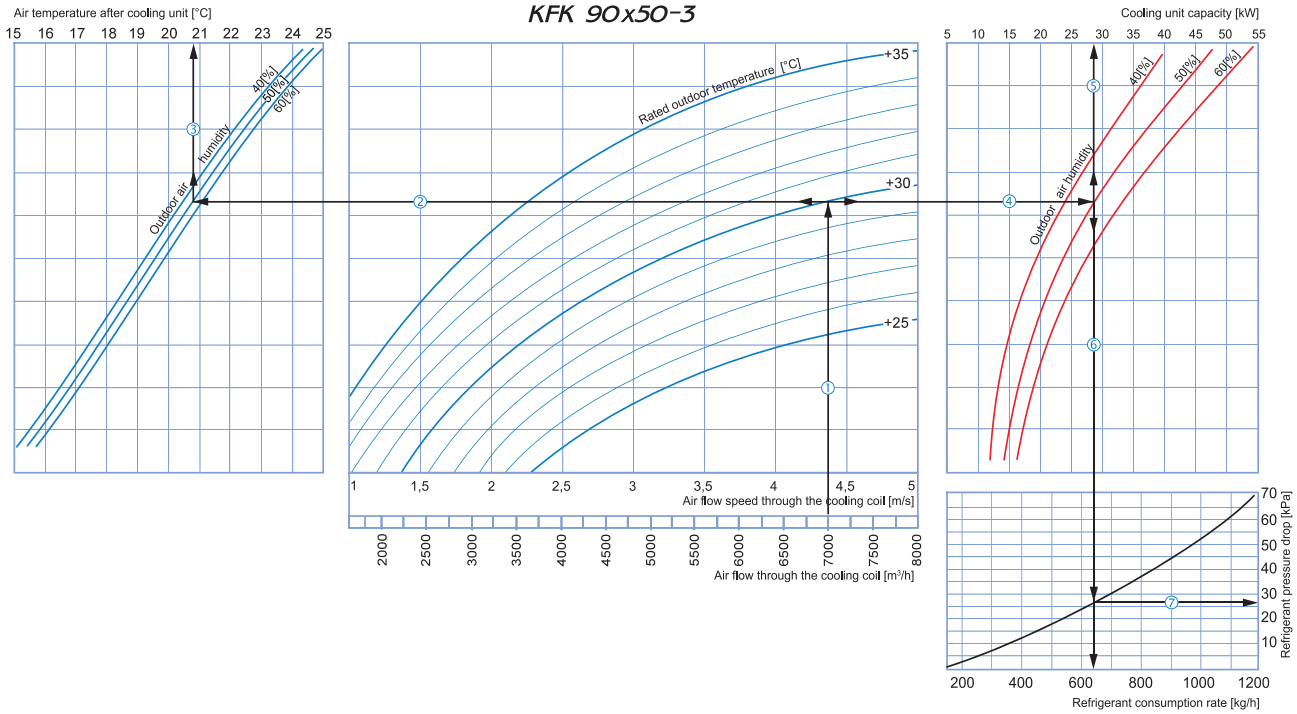

How to use DX cooling coil diagrams:

Sample parameters: Air flow = 7000 m³/h, air flow speed through the cooling coil = 4.4 m/s ①.

- **Supply air temperature:** prolong the line of air flow (e.g. 7000 m³/h) ① up to the point where it crosses the outside air temperature (e.g. +30°C); then draw a horizontal line ② from this point to the left until it crosses the outdoor air humidity curve (e.g. 50%). From this point draw a vertical line ③ to the air temperature after cooling unit axis on top of the graphic (+20.7 °C).
- **Cooling coil capacity:** Prolong the line ① up to the point where it crosses the outside air temperature (e.g. +30°C) and draw a horizontal line ④ from this point to the right until it crosses the outdoor air humidity curve (e.g. 50%). From here draw a vertical line ⑤ up to the scale representing the cooling coil capacity (28 kW).
- **Refrigerant consumption through the coil:** Prolong the line ⑤ down to the refrigerant consumption axis ⑥ at the bottom of the graphic (640 kg/h).
- **Refrigerant pressure drop:** Draw the line ⑦ from the point where the line ⑥ crosses the curve to the refrigerant drop axis (26 kPa).

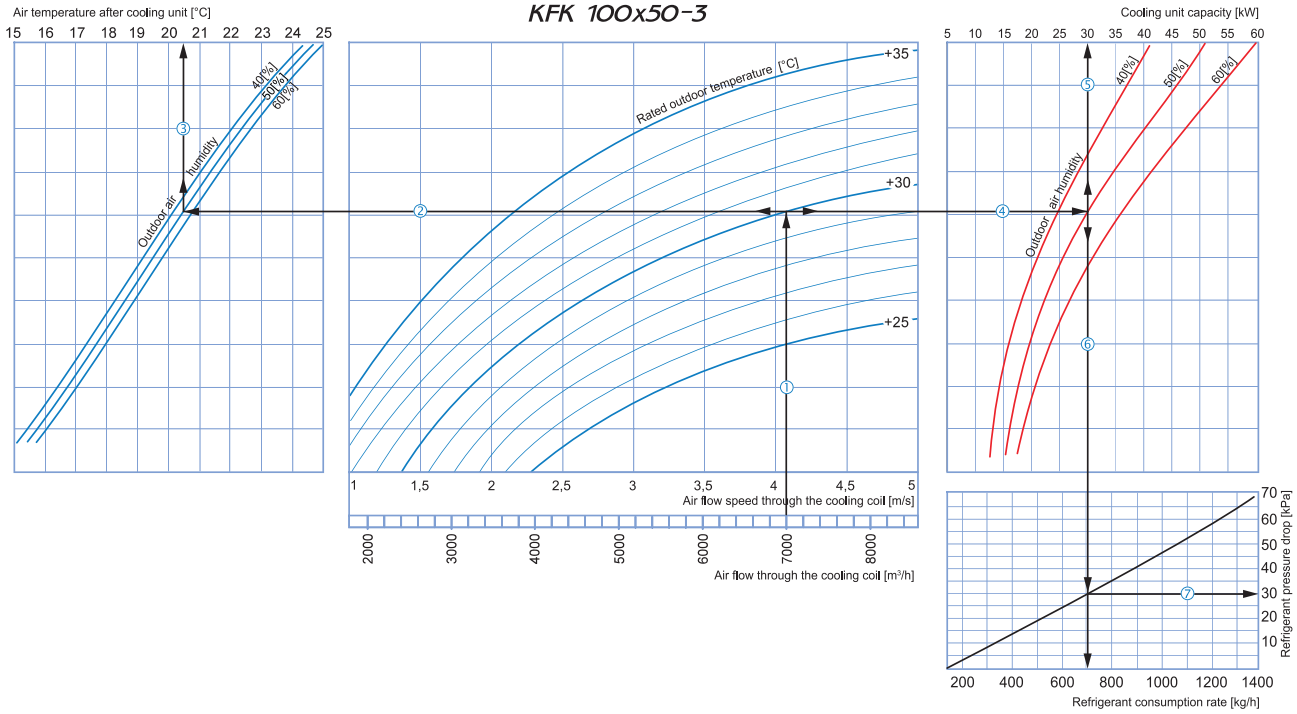

How to use DX cooling coil diagrams:

Sample parameters: Air flow = 7000 m³/h, air flow speed through the cooling coil = 4.1 m/s ①.

- **Supply air temperature:** prolong the line of air flow (e.g. 7000 m³/h) ① up to the point where it crosses the outside air temperature (e.g. +30°C); then draw a horizontal line ② from this point to the left until it crosses the outdoor air humidity curve (e.g. 50%). From this point draw a vertical line ③ to the air temperature after cooling unit axis on top of the graphic (+20.5 °C).
- **Cooling coil capacity:** Prolong the line ① up to the point where it crosses the outside air temperature (e.g. +30°C) and draw a horizontal line ④ from this point to the right until it crosses the outdoor air humidity curve (e.g. 50%). From here draw a vertical line ⑤ up to the scale representing the cooling coil capacity (30 kW).
- **Refrigerant consumption through the coil:** Prolong the line ⑤ down to the refrigerant consumption axis ⑥ at the bottom of the graphic (710 kg/h).
- **Refrigerant pressure drop:** Draw the line ⑦ from the point where the line ⑥ crosses the curve to the refrigerant drop axis (30 kPa).

Water mixing units

WMG

for water heating and cooling units

Application

- Smooth heating medium flow regulation and supply air set temperature maintaining in ventilation systems with water heating or cooling coils.
- Compatible with the WKH duct water heating coils and the KWK duct cooling coils.
- Compatible with all water heating or cooling coils installed in BLAUBOX supply units and KOMFORT air handling units.

Design

The water mixing unit consists a circulation pump, a three-way electrically actuated heat medium control valve and a recirculation pipe.

The three-way valve is designed for smooth mixing of the heat medium stream from the heating (cooling) system and the return heat medium in a required proportion to regulate the heat medium temperature supplied to the water heating or cooling coils.

The three-way way is actuated with a control 0-10 V signal from the ventilation control system.

The mixing unit is rated for heat medium operating pressure in the mixing set 10 bar.

Connection to water circuit

Connection of the mixing unit to the water heating or cooling coils and to the water heating/cooling network through the pipes or flexible hoses of respective diameter, refer to the technical data table.

In case of applying flexible hoses the mixing unit must be rigidly fixed.

While installing the mixing unit the motor shaft must be installed horizontally. No mechanical loads from the pipes are allowed.

Overall dimensions

Model	Dimensions [mm]				Weight [kg]
	B	H	H1	L	
WMG 3/4-4	150	290	180	460	4.1
WMG 3/4-6	150	290	180	460	4.1
WMG 1-6	175	320	210	490	6.8
WMG 1-10	175	320	210	490	6.8
WMG 1 1/4-10	175	355	240	500	7.4
WMG 1 1/4-16	175	355	240	500	7.4
WMG 1 1/2-16	266	420	255	610	23.0
WMG 1 1/2-25	266	420	255	610	23.0
WMG 2-25	312	474	290	660	31.0
WMG 2-40	312	474	290	660	31.0

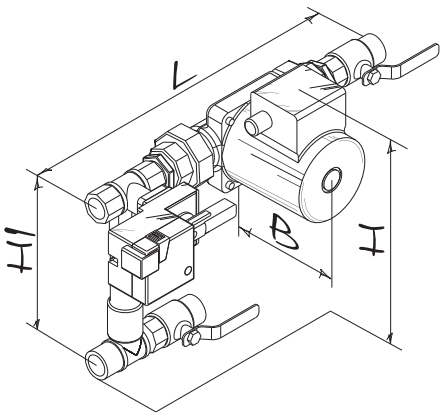

Specifications

Parameters	WMG 3/4-4	WMG 3/4-6	WMG 1-6	WMG 1-10	WMG 1 1/4-10	WMG 1 1/4-16	WMG 1 1/2-16	WMG 1 1/2-25	WMG 2-25	WMG 2-40
Circulation pump	DAB VA65/ 180		DAB A50/ 180XM		DAB A56/ 180XM		DAB BPH 120/ 250.40M		DAB BPH 120/ 280.50T	
Three-way valve control way	0...10 V									
Electrically actuated three-way valve	R317	R318	R322	R323	R329	R331	R338	R339G	R348	R349G
Three-way valve actuator Belimo	LR24A-SR						NR24A-SR	SR24A-SR	NR24A-SR	SR24A-SR
Connection type	Threaded connection						Flanged connection			
Three-way valve nominal diameter	DN 20	DN 20	DN 25	DN 25	DN 32	DN 32	DN 40	DN 40	DN 50	DN 50
Three-way valve heat medium transmission factor (K_{VS}*)	4	6.3	6.3	10	10	16	16	25	25	40
Max. mixing unit flow capacity [m^3/h]	2.3	3.0	4.1	6.0	6.8	9.0	11.0	14.0	21.0	27.0
Developed head [kPa]	57	57	57	57	62	62	110	110	115	115
Connected spigot diameter	3/4"	3/4"	1"	1"	1 1/4"	1 1/4"	1 1/2"	1 1/2"	2"	2"
Transported heat medium temperature [°C]	-10...+110						-10...+120			
Max. glycol content in the transported heat medium [%]	30	30	30	30	30	30	30	30	30	30
Number of pump speeds	3	3	3	3	3	3	3	3	3	3
Phase / Pump supply voltage / 50 Hz [V]	1 ~ 230								3 ~ 400	
Max. pump power [W]	78	78	184	184	271	271	510	510	898	898

* heat medium transmission factor $K_{vs} = \frac{V_{100}}{\sqrt{\frac{\Delta pv_{100}}{100}}}$, where Δpv_{100} – pressure loss when the heat medium valve is fully opened; V_{100} – rated heat medium flow at Δpv_{100}.

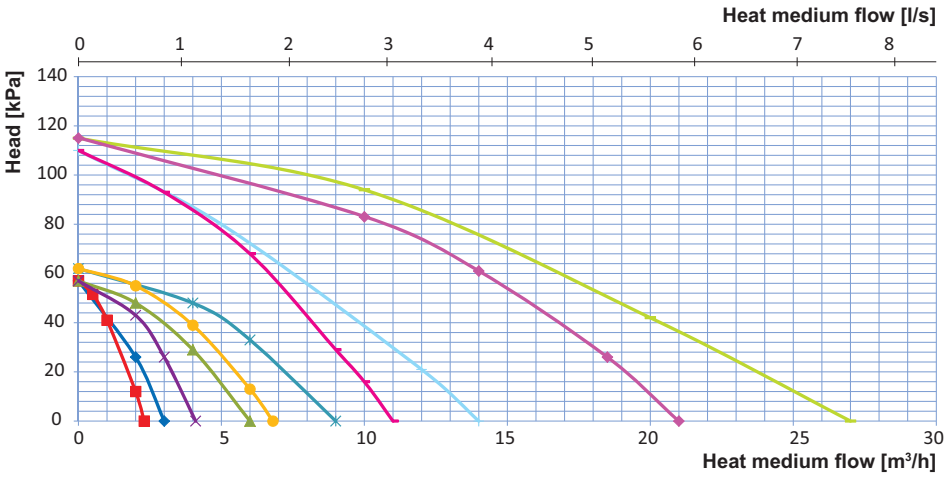

Mixing unit calculation diagram

Mixing unit selection: find the required heat medium flow through the heating (cooling) unit as well as heat medium pressure drop (available head). These parameters are determined using the heating or cooling unit calculation diagram for each water heating or cooling unit.

- WMG 3/4-4
- WMG 3/4-6
- WMG 1-6
- WMG 1-10
- WMG 1 1/4-10
- WMG 1 1/4-16
- WMG 1 1/2-16
- WMG 1 1/2-25
- WMG 2-25
- WMG 2-40

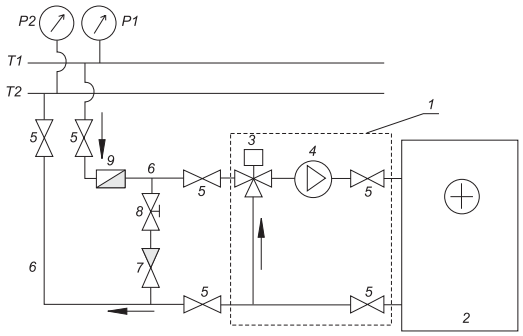

Recommended connection to water network

T1 and T2 – heat medium supply and return pipeline;
P1 and P2 – water pressure gauges for supply and return pipes.

1 – mixing unit;
2 – water heater;
3 – electrically actuated three-way valve;
4 – circulation pump;
5 – shut-off valve;
6 – supply and return pipes from the heat distribution system to the water heater;
7 – non-return valve;
8 – balancing valve;
9 – coarse filter.

Silencers

SD

for round ducts

Application

- For attenuation of noise produced by a ventilation system and spreaded along ventilation ductworks.
- Used jointly with sound-insulated fans in premises with high requirements to noise level produced by ventilation equipment.
- Compatible with Ø100 mm up to 315 mm round air ducts.

Design

- Galvanized steel case is filled with non-flammable sound-absorbing material with protecting covering against fiber blowing.
- Airtight connection with air ducts due to connecting flanges with rubber seals.
- A great variety of standard ranges with several length options.

Mounting

- Fixing to round ducts with clamps.
- Any mounting position.
- For better sound absorption install the silencers in series.

Type	Noise level reduction, dB (octave-frequency band [Hz])							
	63 Hz	125 Hz	250 Hz	500 Hz	1000 Hz	2000 Hz	4000 Hz	8000 Hz
SD 100/600	4	8	10	20	34	30	13	14
SD 100/900	5	10	15	23	44	30	16	15
SD 100/1200	6	11	19	28	50	34	20	18
SD 125/600	3	5	6	15	28	17	10	9
SD 125/900	4	9	12	22	43	22	16	12
SD 125/1200	4	9	16	27	48	27	21	17
SD 150/600	2	4	8	16	32	11	7	7
SD 150/900	3	5	9	18	36	25	13	14
SD 150/1200	4	8	14	25	43	30	18	19
SD 160/600	2	4	8	17	33	11	7	7
SD 160/900	2	5	10	19	37	25	13	15
SD 160/1200	4	10	14	24	42	30	19	20
SD 200/600	2	4	6	10	27	13	7	7
SD 200/900	3	7	11	20	39	23	8	7
SD 200/1200	4	10	14	23	40	26	13	12
SD 250/600	4	5	6	11	22	12	7	6
SD 250/900	4	5	7	16	32	20	12	10
SD 250/1200	4	6	8	17	34	22	14	12
SD 315/600	2	4	5	10	17	9	6	5
SD 315/900	3	5	8	17	30	14	10	8
SD 315/1200	4	7	11	22	36	18	14	10

Overall dimensions

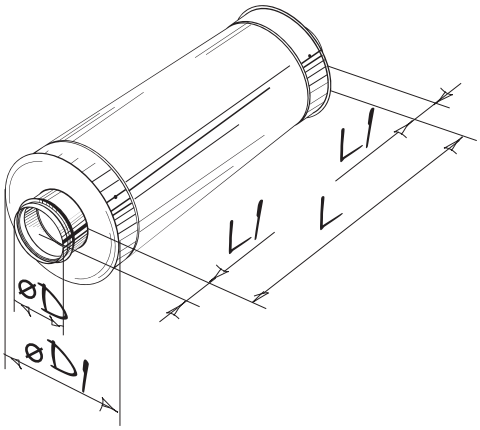

Model	Dimensions [mm]				Weight [kg]
	ØD	ØD1	L	L1	
SD 100/600	99	200	600	50	2.2
SD 100/900	99	200	900	50	3.2
SD 100/1200	99	200	1200	50	4.3
SD 125/600	124	225	600	50	2.7
SD 125/900	124	225	900	50	4.1
SD 125/1200	124	225	1200	50	5.4
SD 150/600	149	250	600	50	2.8
SD 150/900	149	250	900	50	4.2
SD 150/1200	149	250	1200	50	5.6
SD 160/600	159	260	600	50	3.1
SD 160/900	159	260	900	50	4.6
SD 160/1200	159	260	1200	50	6.2
SD 200/600	199	300	600	50	3.5
SD 200/900	199	300	900	50	5.3
SD 200/1200	199	300	1200	50	7.1
SD 250/600	249	350	600	50	4.2
SD 250/900	249	350	900	50	6.2
SD 250/1200	249	350	1200	50	8.3
SD 315/600	314	415	600	50	4.7
SD 315/900	314	415	900	50	7.1
SD 315/1200	314	415	1200	50	9.4

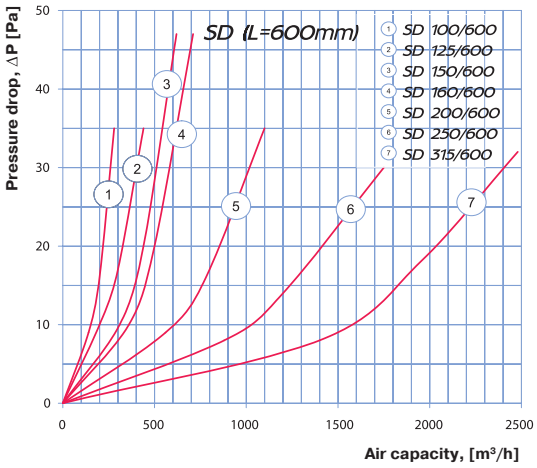

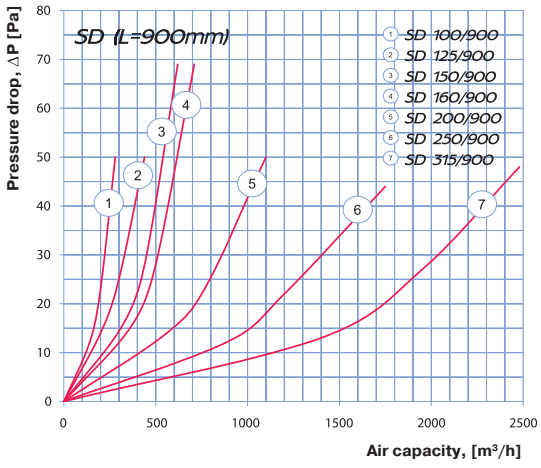

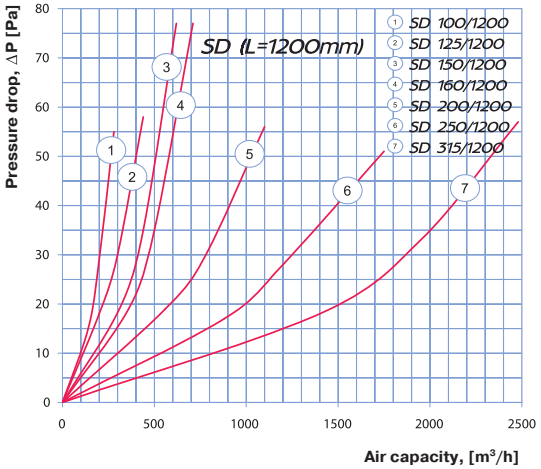

Flexible silencers

SDF

for round ducts

Application

- For attenuation of noise produced by a ventilation system and spreaded along ventilation ductworks.
- Used jointly with sound-insulated fans in premises with high requirements to noise level produced by ventilation equipment.
- Compatible with Ø100 mm up to 315 mm round air ducts.

Design

- Consists of outer and inner flexible spiral seam air ducts made of aluminium alloy and filled with non-flammable sound-absorbing material.
- Internal surface is perforated and covered with protection coating to prevent fiber blowing-out.
- A great variety of standard ranges with several length options.

Mounting

- Fixing to round ducts with clamps.
- Any mounting position.
- For better sound absorption install the silencers in series.
- Fixing on both ends and in the middle to prevent sagging.

Type	Noise level reduction, dB (octave-frequency band [Hz])							
	63 Hz	125 Hz	250 Hz	500 Hz	1000 Hz	2000 Hz	4000 Hz	8000 Hz
SDF 100/600	6	8	13	22	28	34	17	20
SDF 100/900	8	10	15	25	33	40	21	23
SDF 100/2000	10	15	24	48	53	51	39	36
SDF 125/600	4	7	14	20	31	31	13	12
SDF 125/900	5	9	16	23	36	37	17	16
SDF 125/2000	7	15	23	47	55	50	28	25
SDF 150/600	3	7	12	32	40	40	19	20
SDF 150/900	4	8	14	40	48	49	26	25
SDF 150/2000	5	10	21	42	50	48	26	25
SDF 160/600	3	7	12	20	25	24	10	12
SDF 160/900	3	8	13	21	28	28	13	16
SDF 160/2000	5	11	20	40	48	48	25	25
SDF 200/600	2	5	12	20	26	21	10	10
SDF 200/900	3	6	12	22	28	24	12	13
SDF 200/2000	4	11	22	42	51	34	19	23
SDF 250/600	2	3	8	16	22	13	10	10
SDF 250/900	2	4	9	18	25	16	11	12
SDF 250/2000	3	6	16	30	39	27	17	22
SDF 315/600	2	4	9	18	21	12	7	9
SDF 315/900	2	5	11	21	24	14	8	10
SDF 315/2000	4	7	17	34	39	24	14	18

Overall dimensions

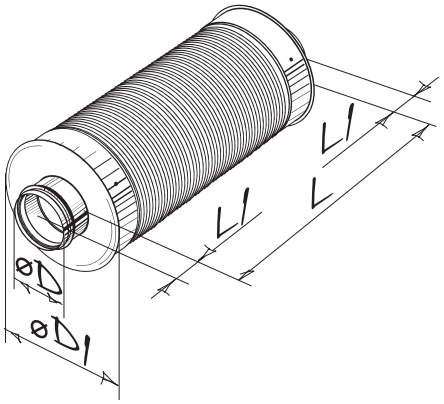

Model	Dimensions [mm]				Weight [kg]
	ØD	ØD1	L	L1	
SDF 100/600	99	220	600	55	1.6
SDF 100/900	99	220	900	55	2.4
SDF 100/2000	99	220	2000	55	5.2
SDF 125/600	124	270	600	55	2.0
SDF 125/900	124	270	900	55	3.0
SDF 125/2000	124	270	2000	55	6.6
SDF 150/600	149	270	600	55	2.1
SDF 150/900	149	270	900	55	3.1
SDF 150/2000	149	270	2000	55	6.8
SDF 160/600	159	270	600	55	2.1
SDF 160/900	159	270	900	55	3.2
SDF 160/2000	159	270	2000	55	7.0
SDF 200/600	199	320	600	55	2.6
SDF 200/900	199	320	900	55	3.9
SDF 200/2000	199	320	2000	55	8.6
SDF 250/600	249	370	600	55	3.0
SDF 250/900	249	370	900	55	4.5
SDF 250/2000	249	370	2000	55	10.1
SDF 315/600	314	420	600	55	3.4
SDF 315/900	314	420	900	55	5.1
SDF 315/2000	314	420	2000	55	11.4

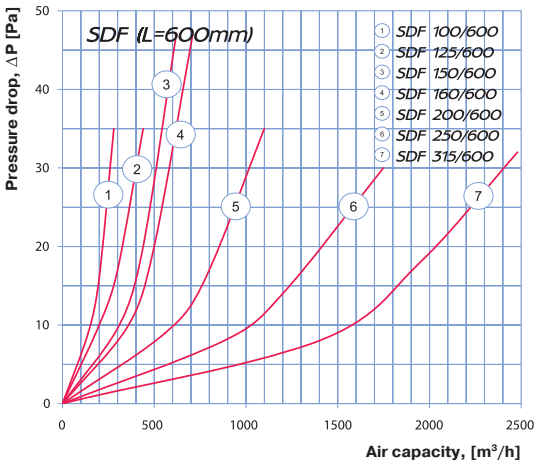

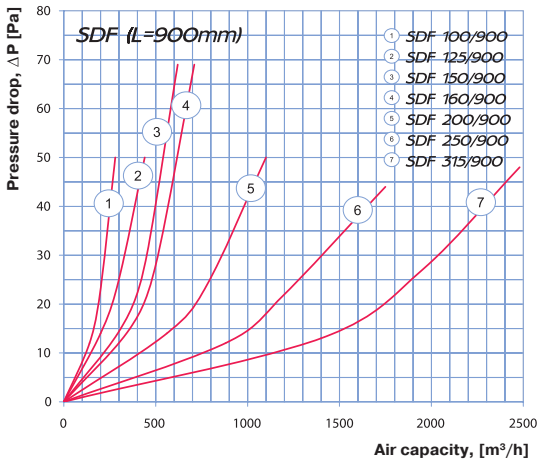

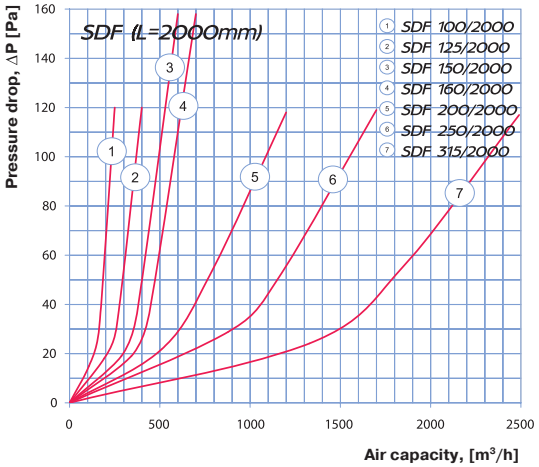

Silencers

SD

for rectangular ducts

Application

- For attenuation of the noise produced by a ventilation system and spreaded along ventilation ductworks.
- Used jointly with sound-insulated fans in premises with high requirements to noise level produced by ventilation equipment.
- Compatible with 400x200 up to 1000x500 rectangular air ducts.

Design

- Galvanized steel case and sleeves.
- The plates are filled with non-flammable sound-absorption material with protecting coating to prevent fiber blowing.

Mounting

- Fixing to rectangular ducts with flange connection.
- For maximum sound absorption capacity provide a straight air duct section at least 1 m long towards the silencer.
- For better sound absorption install the silencers in series.

Type	Noise level reduction, dB (octave-frequency band [Hz])							
	63 Hz	125 Hz	250 Hz	500 Hz	1000 Hz	2000 Hz	4000 Hz	8000 Hz
SD 40x20	3	7	10	23	27	30	25	22
SD 50x25	3	6	11	22	26	25	27	22
SD 50x30	3	6	10	23	24	25	23	18
SD 60x30	3	6	10	21	24	30	24	17
SD 60x35	3	5	11	22	25	29	24	21
SD 70x40	4	7	10	15	22	19	21	18
SD 80x50	5	6	11	17	21	20	22	20
SD 90x50	3	6	10	16	20	20	21	15
SD 100x50	4	6	11	16	21	21	23	17

Overall dimensions

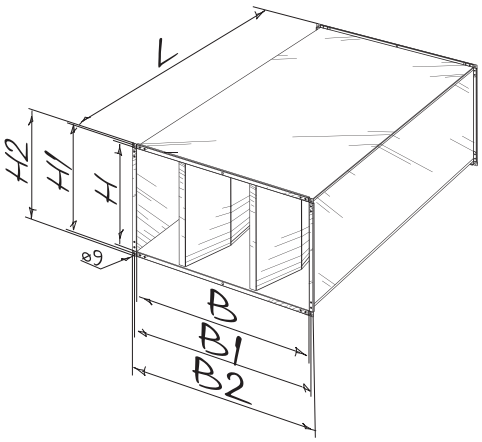

Model	Dimensions [mm]							Weight [kg]
	B	B1	B2	H	H1	H2	L	
SD 40x20	400	420	440	200	220	240	950	18.5
SD 50x25	500	520	540	250	270	290	950	20.5
SD 50x30	500	520	540	300	320	340	950	24.5
SD 60x30	600	620	640	300	320	340	950	26.5
SD 60x35	600	620	640	350	370	390	950	28.7
SD 70x40	700	720	740	400	420	440	1010	36.7
SD 80x50	800	820	840	500	520	540	1010	50.0
SD 90x50	900	920	940	500	520	540	1010	51.7
SD 100x50	1000	1020	1040	500	520	540	1010	57.3

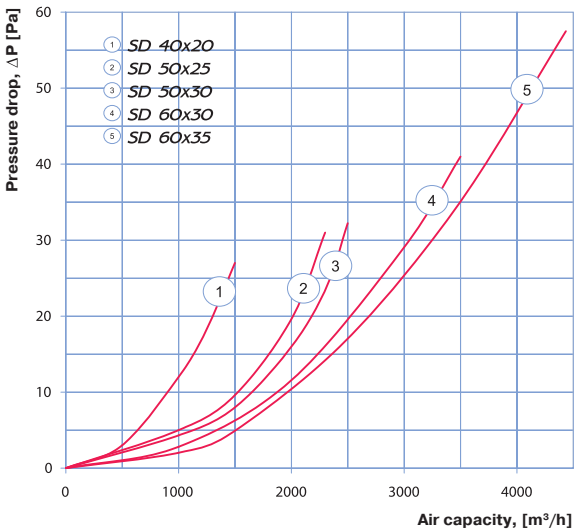

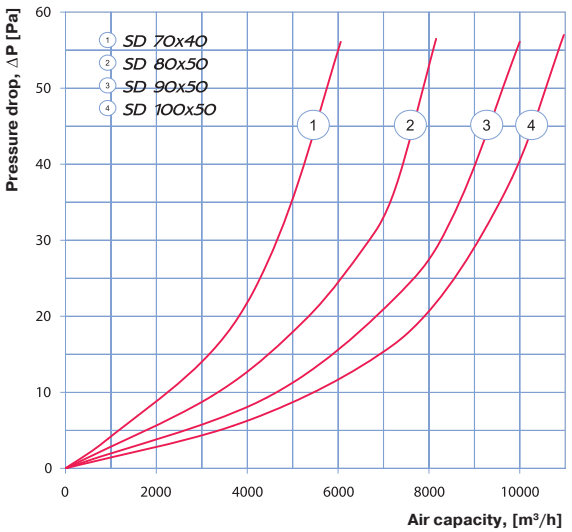

Shutters

VK

for round ducts

Application

- For manual regulation of air flow volume in the air ducts.
- Compatible with Ø80 to 450 mm round air ducts.

Design

- The casing and the rotary blade are made of galvanized steel.
- Airtight connection to air ducts due to rubber seals.
- Air flow manual regulation with a metal handle equipped with a lever and a locking device for fixing the position of the rotary blades.
- In closed position about 10 % of cross section is left open.

Mounting

- Fixing to round ducts with clamps.

Overall dimensions

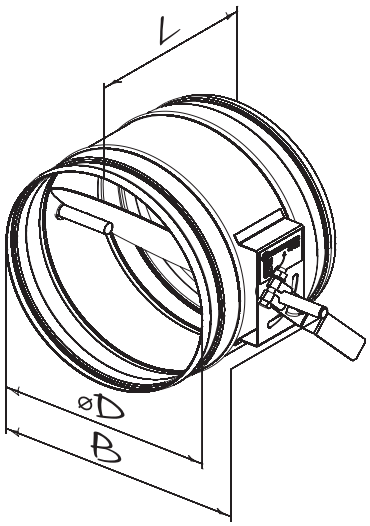

Model	Dimensions [mm]			Weight [kg]
	ØD	B	L	
VK 80	79	140	160	0.43
VK 100	99	170	160	0.55
VK 125	124	195	160	0.69
VK 150	149	220	160	0.83
VK 160	159	230	160	0.90
VK 200	199	270	160	1.14
VK 250	249	320	200	1.65
VK 315	314	385	250	2.45
VK 355	348	425	300	3.21
VK 400	399	470	350	3.90
VK 450	449	520	400	5.1

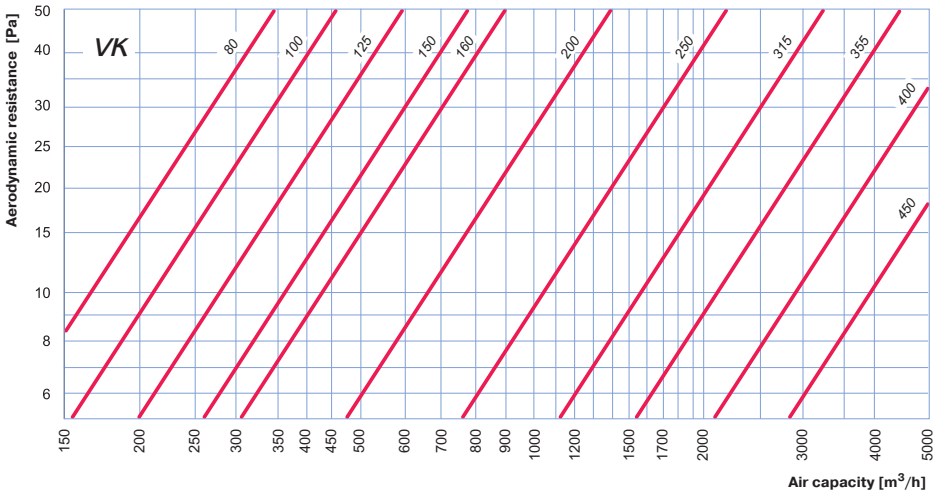

Shutters

VKA

for round ducts

Application

- For automatic shut-off of air ducts installed in ventilation systems of various premises.
- Compatible with Ø80 to 450 mm round air ducts.

Design

- The casing and the rotary blade are made of galvanized steel.
- Airtight connection to air ducts due to rubber seals.
- A shaft and a mounting pad are provided for BELIMO electric actuator. Compatible actuators are shown in the table below.

Mounting

- Fixing to round ducts with clamps.
- While mounting provide enough space for accessing the electric actuator.

Overall dimensions

Model	Dimensions [mm]			Weight [kg]
	ØD	B	L	
VKA 80	79	190	220	0.64
VKA 100	99	220	220	0.75
VKA 125	124	245	220	0.91
VKA 150	149	270	220	1.08
VKA 160	159	280	220	1.18
VKA 200	199	320	220	1.45
VKA 250	249	370	220	1.85
VKA 315	314	435	250	2.51
VKA 355	348	475	300	3.26
VKA 400	399	520	350	3.51
VKA 450	449	570	400	5.00

Compatibility table of air dampers with electric actuators

Model	Actuator type			
	Electric actuator, 230 V	Electric actuator with spring return, 230 V	Electric actuator, 24 V	Electric actuator with spring return, 24 V
VKA 80	CM230 / LM230A	TF230	CM24 / LM24A	TF24
VKA 100				
VKA 125	CM230 / LM230A	TF230	CM24 / LM24A	TF24
VKA 150				
VKA 160	CM230 / LM230A	TF230	CM24 / LM24A	TF24
VKA 200				
VKA 250	CM230 / LM230A	TF230	CM24 / LM24A	TF24
VKA 315				
VKA 355	CM230 / LM230A	TF230	CM24 / LM24A	TF24
VKA 400				
VKA 450				

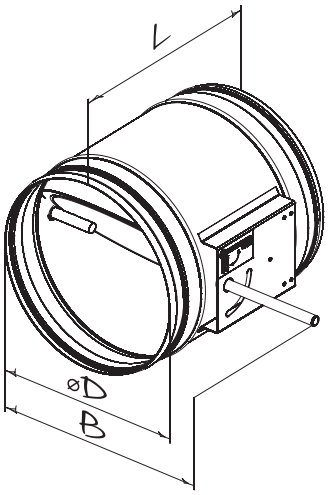

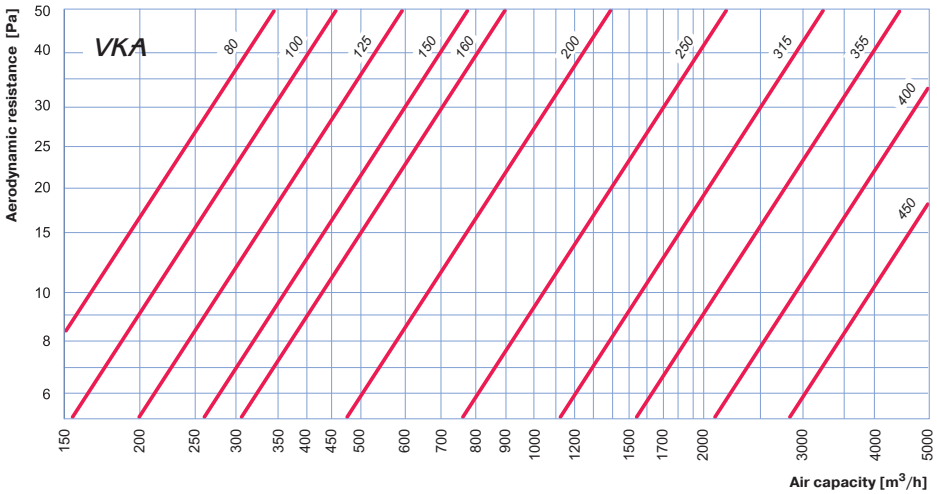

Shutters

VK

for rectangular ducts

Application

- For manual regulation of air flow or shut-off of air ducts.
- Compatible with 400x200 up to 600x350 mm rectangular air ducts.

Design

- Galvanized steel case and rotary blade.
- Manual regulation with a metal handle equipped with a lever and a locking device for fixing the position of the rotary blade.

Mounting

- Fixing to rectangular ducts with flange connection.
- Mounting with galvanized bolts and clamps that fix the end flanges of the air shutter to the mating flanges of the air ducts or any other ventilation system components.

Overall dimensions

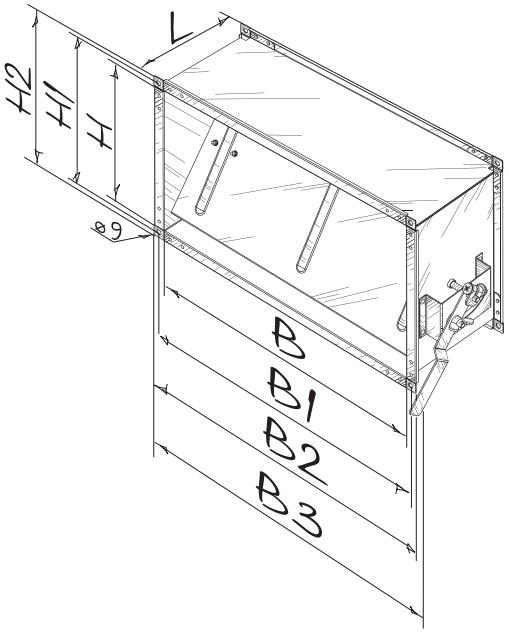

Model	Dimensions [mm]								Weight [kg]
	B	B1	B2	B3	H	H1	H2	L	
VK 40x20	400	420	440	460	200	220	240	202	3.0
VK 50x25	500	520	540	560	250	270	290	202	3.8
VK 50x30	500	520	540	560	300	320	340	202	3.1
VK 60x30	600	620	640	660	300	320	340	202	4.2
VK 60x35	600	620	640	660	350	370	390	202	5.1

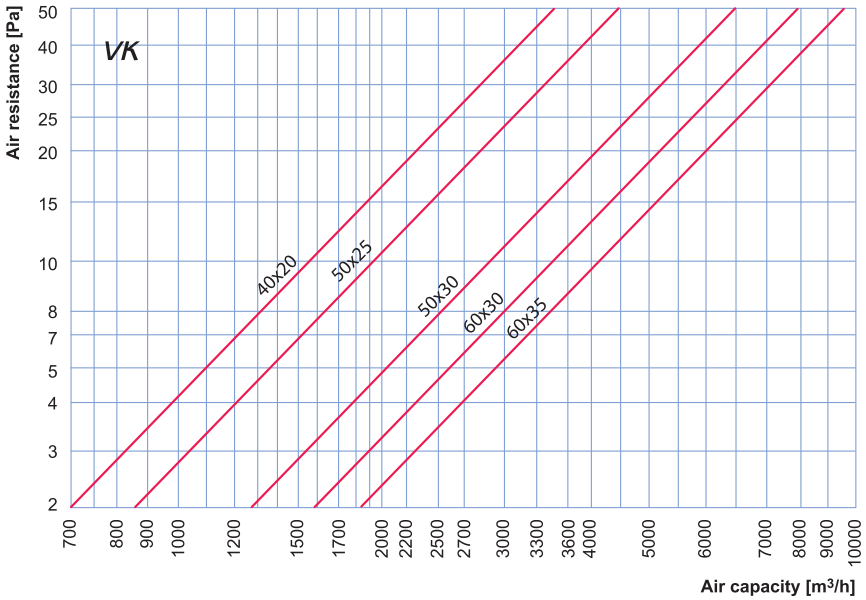

Shutterss

AVK

for rectangular ducts

Application

- For automatic regulation of air flow volume or shut-off of air ducts installed in various premises.
- Compatible with 400x200 up to 600x350 mm rectangular air ducts.

Design

- Galvanized steel case and rotary blade.
- Automatic control of the regulating mechanism with a servo actuator installed on the damper shaft. Three-point circuit provides regulation of the rotary blade; adjustable with mechanical stop blocks, maximum angle 95°. The servo actuator has overheating protection.
- Switching to manual control mode if required.

Mounting

- Fixing to rectangular ducts with flange connection.
- Mounting with galvanized bolts and clamps that fix the end flanges of the air shutter to the mating flanges of the air ducts or any other ventilation system components.
- While mounting provide enough space for accessing the servo actuator.

Overall dimensions

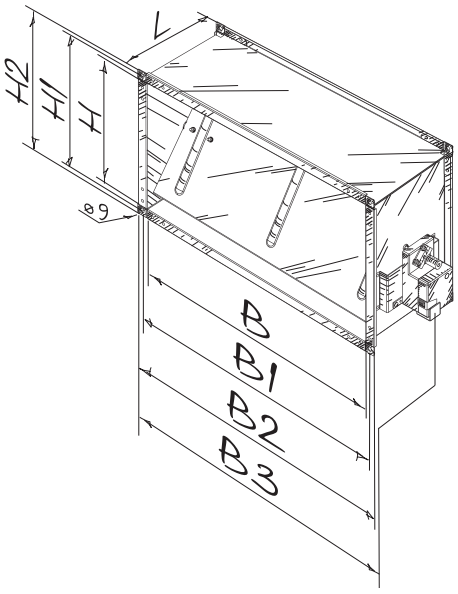

Model	Dimensions [mm]								Weight [kg]
	B	B1	B2	B3	H	H1	H2	L	
AVK 40x20	400	420	440	503	200	220	240	202	3.6
AVK 50x25	500	520	540	603	250	270	290	202	4.4
AVK 50x30	500	520	540	603	300	320	340	202	4.8
AVK 60x30	600	620	640	703	300	320	340	202	5.4
AVK 60x35	600	620	640	703	350	370	390	202	5.8

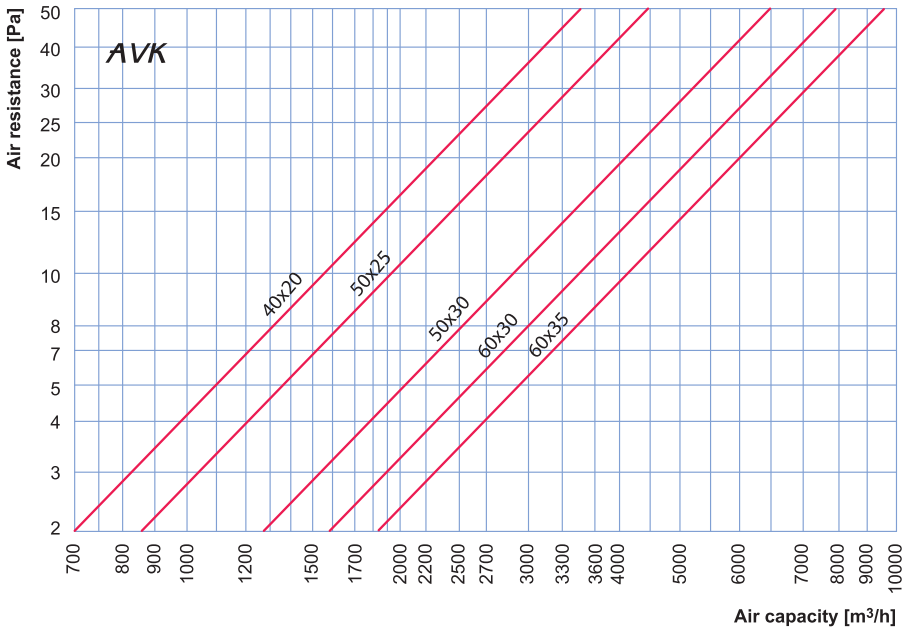

Gravity dampers

VG

for rectangular ducts

Application

- For automatic shutoff of air ducts installed in various premises when the fan is off.
- Gravitationally actuated.
- Compatible with 400x200 up to 1000x500 mm rectangular air ducts.

Design

- Galvanized steel case.
- Equipped with pivoted gravity louvre shutters made of PVC built into a frame.
- Louvre shutters are opened by air pressure and are closed automatically when the fan is off.

Mounting

- Fixing to rectangular ducts in upright position.
- Provide free gravity actuating of the louvre shutters.
- While mounting into the ventilation system match air flow direction.

Overall dimensions

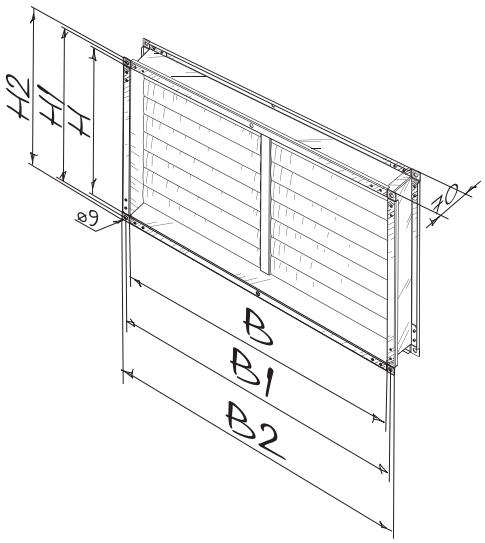

Model	Dimensions [mm]						Weight [kg]
	B	B1	B2	H	H1	H2	
VG 40x20	400	420	440	200	220	240	1.29
VG 50x25	500	520	540	250	270	290	1.58
VG 50x30	500	520	540	300	320	340	1.83
VG 60x30	600	620	640	300	320	340	2.05
VG 60x35	600	620	640	350	370	390	2.21
VG 70x40	700	720	740	400	420	440	3.0
VG 80x50	800	820	840	500	520	540	3.6
VG 90x50	900	920	940	500	520	540	3.8
VG 100x50	1000	1020	1040	500	520	540	4.0

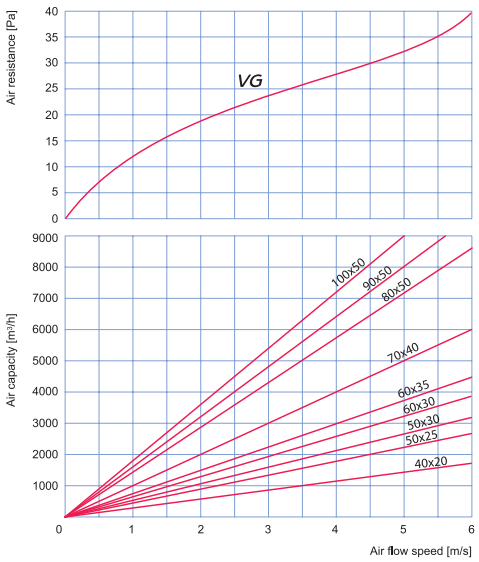

Gravity dampers

VG

for round ducts

Application

- For automatic shutoff of air ducts installed in various premises when the fan is off.
- Gravitationally actuated.
- Compatible with Ø100 up to 315 mm round air ducts.

Design

- Galvanized steel case.
- Equipped with pivoted gravity louvre shutters made of PVC built inside the inner frame.
- Louvre shutters are opened by air pressure and are closed automatically when the fan is off.
- The spigot is equipped with rubber seals.

Mounting

- Fixed inside round ventilation ducts.
- Provide free gravity actuating of the louvre shutters.
- While mounting into the ventilation system match air flow direction.

Overall dimensions

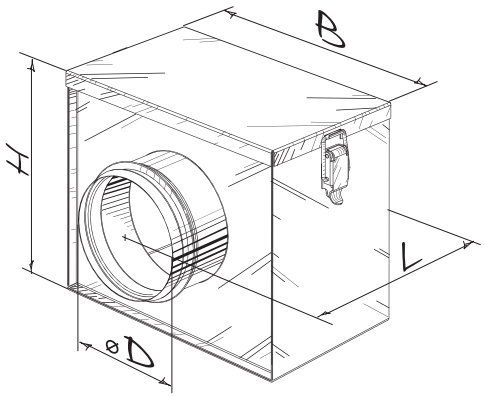

Model	Dimensions [mm]				Weight [kg]
	D	B	H	L	
VG 100	99	225	216	232	1.814
VG 125	124	225	216	232	1.794
VG 140	139	225	216	232	1.798
VG 150	149	225	216	232	1.774
VG 160	159	225	216	232	1.699
VG 200	199	295	316	232	2.764
VG 250	249	295	316	232	2.624
VG 315	314	365	366	232	3.238

Air flow dampers

SL

for rectangular ducts

Application

- For manual regulation of air flow volume or shut-off of air ducts installed in ventilation systems of various premises.
- Compatible with 400x200 mm up to 1000x500 mm rectangular air ducts.

Design

- The multi-blade design with the counter-rotated blades.
- The casing is made of galvanized steel.
- The rotary blades from aluminium profile are rotated with the gears.
- Air flow manual regulation with a metal handle equipped with a lever and a locking device to fix position of the rotary blades.
- A shaft and a mounting pad are provided for BELIMO electric actuator. Compatible actuators are shown in the table below.

Mounting

- Fixing to rectangular ducts with flange connection.
- Mounting with galvanized bolts and clamps that fix the end flanges of the air flow regulators to the mating flanges of the air ducts or any other ventilation system components.

Compatibility table of air dampers with electric actuators

Model	Actuator type			
	Electric actuator, 230 V	Electric actuator with spring return, 230 V	Electric actuator, 24 V	Electric actuator with spring return, 24 V
SL 40x20	CM230 / LM230A	TF230 / LF230	CM24 / LM24A	TF24 / LF24
SL 50x25				
SL 50x30				
SL 60x30				
SL 60x35				
SL 70x40	LM230A	LF230	LM24A	LF24
SL 80x50				
SL 90x50				
SL 100x50				

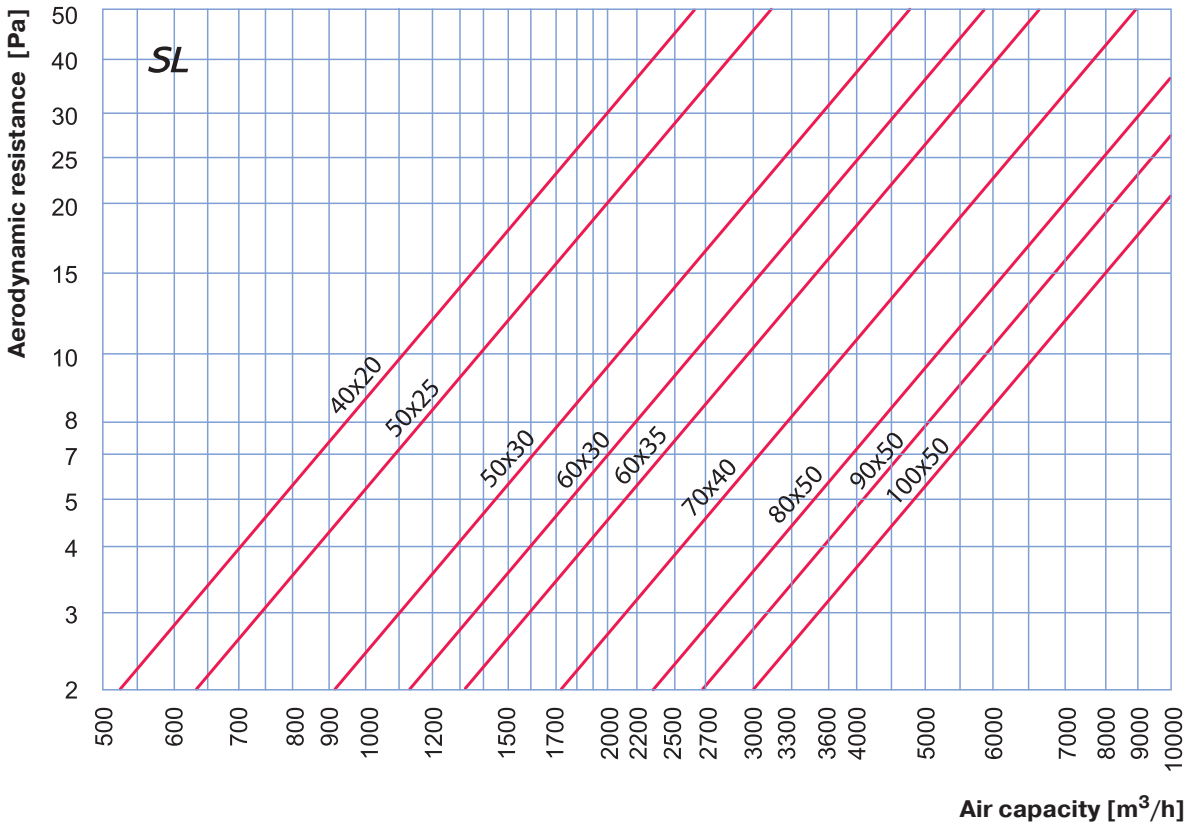

Overall dimensions

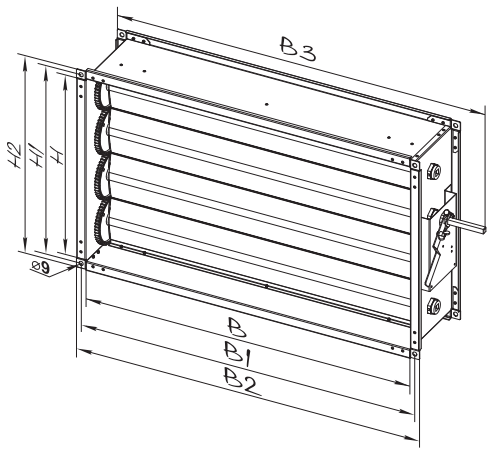

Model	Dimensions [mm]								Weight [kg]
	B	B1	B2	B3	H	H1	H2	L	
SL 40x20	400	420	440	540	200	220	240	170	3.5
SL 50x25	500	520	540	640	250	270	290	170	4.2
SL 50x30	500	520	540	640	300	320	340	170	4.9
SL 60x30	600	620	640	740	300	320	340	170	5.4
SL 60x35	600	620	640	740	350	370	390	170	5.7
SL 70x40	700	720	740	840	400	420	440	170	7.7
SL 80x50	800	820	840	940	500	520	540	170	8.8
SL 90x50	900	920	940	1040	500	520	540	170	9.6
SL 100x50	1000	1020	1040	1140	500	520	540	170	10.3

Flexible anti-vibration connectors

EVA

for round ducts

Application

- For damping vibration generated by fans or ventilation equipment and transferred to air ducts.
- For partial compensation of ductworksdistortion resulting from temperature changes.
- Compatible with Ø100 up to 500 mm round air ducts.

Design

- Two galvanized steel flanges.
- Connecting vibration-isolating material is made of nylon reinforced polyethylene fabric.
- Not designed for mechanical load and cannot be used as a load-carrying structure.

Mounting

- Flexible vibration damping connectors are fixed to air ducts with clamps.

Overall dimensions

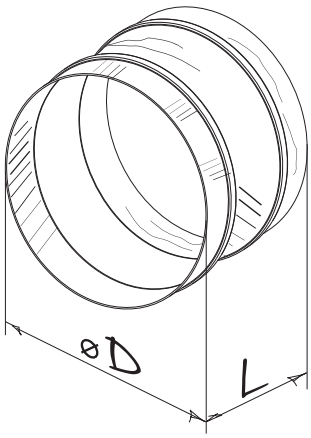

Model	Dimensions [mm]		Weight [kg]
	ØD	L	
EVA 100	101	130	0.14
EVA 125	126	130	0.17
EVA 150	151	130	0.21
EVA 160	161	130	0.22
EVA 200	201	130	0.28
EVA 250	251	130	0.35
EVA 315	316	130	0.44
EVA 355	356	130	0.50
EVA 400	401	130	0.56
EVA 450	451	130	0.64
EVA 500	501	130	0.71

Flexible anti-vibration connectors

EVAF

for round ducts

Application

- For damping the vibration generated by fans or ventilation equipment and transferred to air ducts in ventilation systems of various premises.
- For partial compensation of ductworks temperature deformation.
- Compatible with Ø200 up to 630 mm round air ducts with flanges.

Design

- Two flanges are made of galvanized steel.
- The connecting vibration-isolating material is made of nylon reinforced polyethylene fabric.
- Not designed for mechanical load and cannot be used as a load carrying structure.

Mounting

- Flexible vibration damping connectors are fixed to air ducts with flange connection.

Overall dimensions

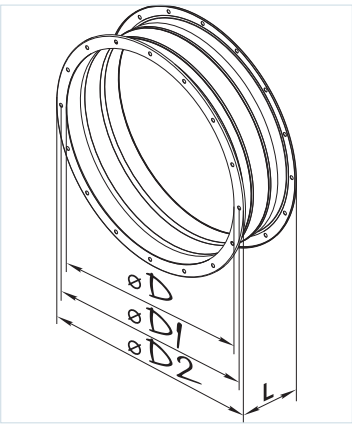

Model	Dimensions [mm]				Weight [kg]
	ØD	ØD1	ØD2	L	
EVAF 200	205	235	255	160	1.29
EVAF 250	260	286	306	160	1.21
EVAF 300	310	356	382	160	1.90
EVAF 350	362	395	421	160	2.06
EVAF 400	412	438	465	160	2.57
EVAF 450	462	487	515	160	2.88
EVAF 500	515	541	570	160	3.81
EVAF 550	565	605	636	160	4.53
EVAF 630	645	674	715	160	5.13

Flexible anti-vibration connectors

EVA

for rectangular ducts

Application

- For damping of vibration generated by fans or ventilation equipment and transferred to air ducts for ventilation systems installed in various premises.
- For partial temperature distortion compensation in the ductworks.
- Compatible with rectangular 400x200 up to 1000x500 mm air ducts.

Design

- Two galvanized steel flanges.
- Connecting vibration-isolating material is made of nylon reinforced polyethylene fabric.
- Not designed for mechanical load and cannot be used as a load-carrying structure.

Mounting

- Mounting with galvanized bolts and clamps that fix the end flanges of the connector to the mating flanges of the air ducts or any other ventilation system components.

Overall dimensions

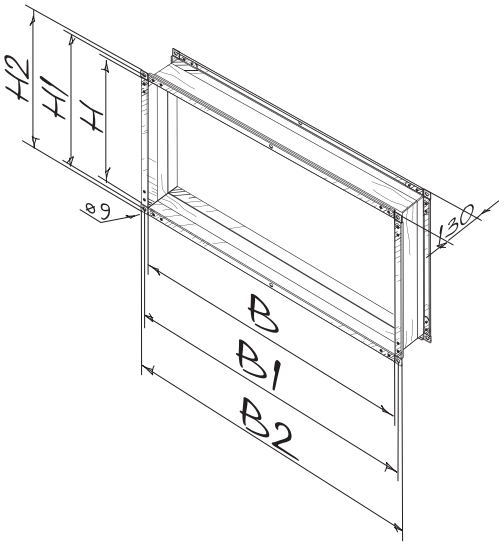

Model	Dimensions [mm]						Weight [kg]
	B	B1	B2	H	H1	H2	
EVA 40x20	400	420	440	200	220	240	1.1
EVA 50x25	500	520	540	250	270	290	1.4
EVA 50x30	500	520	540	300	320	340	1.6
EVA 60x30	600	620	640	300	320	340	1.82
EVA 60x35	600	620	640	350	370	390	1.95
EVA 70x40	700	720	740	400	420	440	2.4
EVA 80x50	800	820	840	500	520	540	2.8
EVA 90x50	900	920	940	500	520	540	3.0
EVA 100x50	1000	1020	1040	500	520	540	3.2

Backdraft dampers with spring

VRV

for round ducts

Application

- For automatic shut-off of the air ducts and prevention of back drafting when the fan is off. Suitable for installation in various premises.
- Compatible with Ø100 up to 315 mm round air ducts.

Design

- Galvanized steel case.
- Two spring-loaded blades made of aluminium.
- Blades are opened by air pressure and are closed with a spring.

Mounting

- Fixing to round ducts with clamps.
- Provide vertical position of blade axis.
- Install the backdraft damper into the ventilation system with respect to the air flow direction.

Overall dimensions

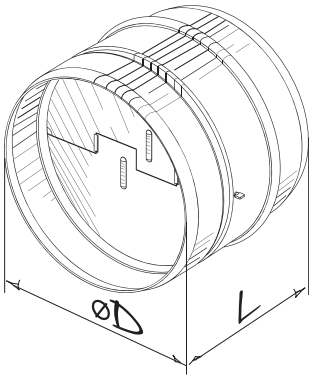

Model	Dimensions [mm]		Weight [kg]
	ØD	L	
VRV 100	99	80	0.18
VRV 125	124	100	0.27
VRV 150	149	115	0.38
VRV 160	159	120	0.42
VRV 200	199	145	0.63
VRV 250	249	165	0.90
VRV 315	314	190	1.31

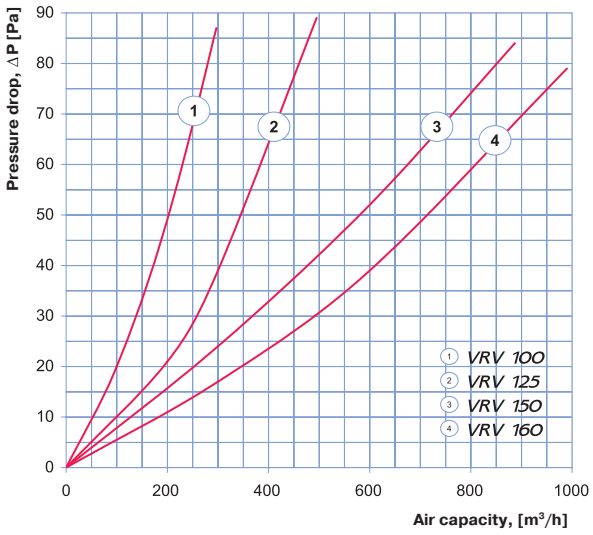

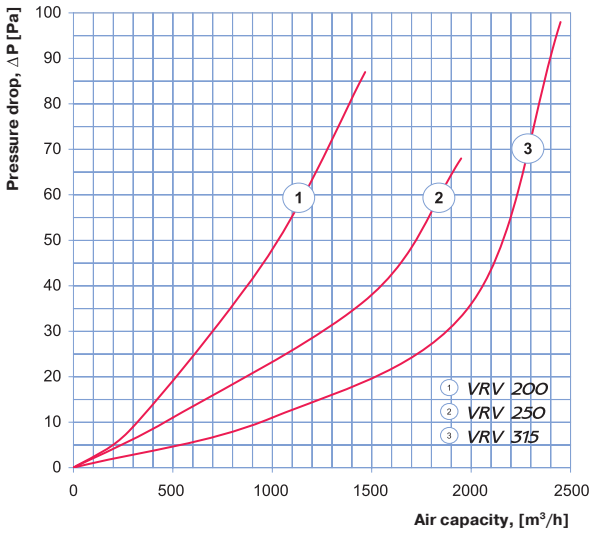

Backdraft dampers

VRVS

for round ducts

Application

- For automatic shut-off of the air ducts and prevention of back drafting when the fan off. Suitable for installation in various premises.
- Compatible with Ø100 up to 315 mm round air ducts.

Design

- Galvanized steel case and rotary gravity-actuated blade.
- Airtight connection with the air ducts due to rubber seals.
- The damper blade is opened with air pressure and reset automatically when the fan is off and no air pressure is produced.
- Manual handle with a counterweight to regulate the damper opening-closing sensitivity.

Mounting

- Fixing to round ducts with clamps.
- Provide free gravity actuated movement of the blade.
- Install the backdraft damper into the ventilation system with respect to the air flow direction.

Overall dimensions

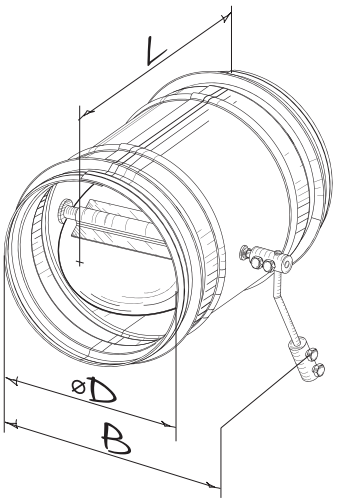

Model	Dimensions [mm]			Weight [kg]
	ØD	B	L	
VRVS 100	99	139	150	0.65
VRVS 125	124	162	170	0.81
VRVS 150	149	194	180	0.97
VRVS 160	159	204	190	1.06
VRVS 200	199	238	220	1.57
VRVS 250	249	290	270	2.2
VRVS 315	314	356	340	3.24

Backdraft dampers

VRVS

for rectangular ducts

Application

- For automatic shut-off of the air ducts and prevention of back drafting when the fan off. Suitable for installation in various premises.
- Compatible with 400x200 up to 600x350 mm rectangular air ducts.

Design

- Galvanized steel case and rotary gravity-actuated blade.
- The damper blade is opened with air pressure and reset automatically when the fan is off and no air pressure is produced.
- Manual handle with a counterweight to regulate the damper opening-closing sensitivity.

Mounting

- Fixing to rectangular ducts in upright position.
- Provide free gravity actuated movement of the blade.
- Install the backdraft damper into the ventilation system with respect to the air flow direction.

Overall dimensions

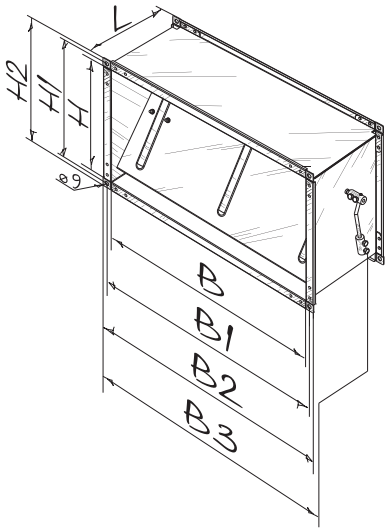

Model	Dimensions [mm]								Weight [kg]
	B	B1	B2	B3	H	H1	H2	L	
VRVS 40x20	400	420	440	461	200	220	240	202	2.9
VRVS 50x25	500	520	540	561	200	270	290	202	3.73
VRVS 50x30	500	520	540	561	300	320	340	202	4.1
VRVS 60x30	600	620	640	661	300	320	340	202	4.64
VRVS 60x35	600	620	640	661	350	370	390	202	5.03

Filter boxes

KFBK

for round ducts

Application

- For purification of supply or exhaust air in ventilation and air conditioning systems installed in various premises.
- Designed for protection of air ducts, heat exchangers, fans, controls and other ventilation system equipment against dust pollution.
- Prevent contamination of walls and ceilings located near the system.
- Can be used as pre-filters installed upstream to more efficient filters.
- Compatible with Ø100 up to 315 mm round air ducts.

Design

- Galvanized steel case.
- Airtight connection of the filter-box with air ducts due to connecting flanges with a rubber seal.
- Equipped with a flat filter cartridge made of synthetic non-woven cloth with filtration class G4.
- Filter cartridge is fixed on a steel wire frame.
- Quick access to replaceable filter cartridge due to lever locks on the casing.

Mounting

- Fixing to round ducts with clamps.
- Any mounting position.
- While mounting provide extra space for free access to the filter for servicing.

Accessories

- G4 replaceable flat filter cartridges made of synthetic non-woven cloth series FP-KFBK.

Overall dimensions

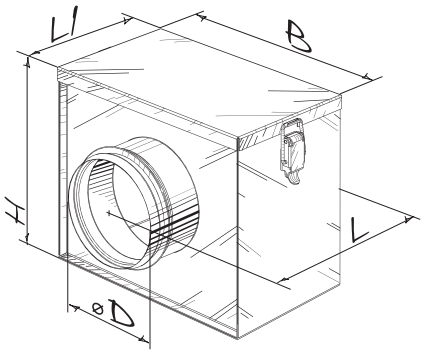

Model	Dimensions [mm]					Weight [kg]
	ØD	B	H	L	L1	
KFBK 100	99	210	175	215	123	1.4
KFBK 125	124	220	209	235	143	1.7
KFBK 150	149	270	237	250	158	2.5
KFBK 160	159	270	237	250	158	2.3
KFBK 200	199	320	279	275	183	3.1
KFBK 250	249	370	327	325	233	4.5
KFBK 315	314	430	392	425	333	6.7

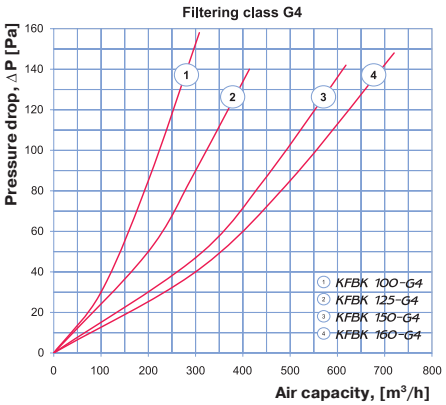

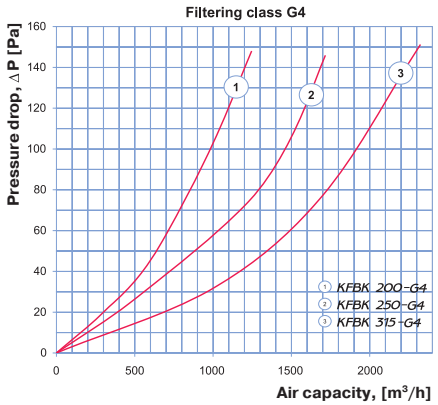

Filter boxes with V-filter

KFBV

for round ducts

Application

- For purification of supply or exhaust air in ventilation and air conditioning systems installed in various premises.
- Designed for protection of air ducts, heat exchangers, fans, controls and other ventilation system equipment against dust pollution.
- Prevent contamination of walls and ceilings located near the system.
- Can be used as pre-filters installed upstream to more efficient filters.
- Compatible with Ø100 up to 315 mm round air ducts.

Design

- Galvanized steel case.
- Airtight connection of the filter-box with air ducts due to connecting flanges with a rubber seal.
- Equipped with a V-shaped filter cartridge with increased filter surface made of synthetic non-woven cloth with G4 filtration class.
- Filter cartridge is fixed on a steel wire frame.
- Quick access to replaceable filter cartridge due to lever locks on a swivel filter cover.

Mounting

- Fixing to round ducts with clamps.
- Any mounting position.
- While mounting provide extra space for free access to the filter for servicing.

Accessories

- G4 replaceable V-shaped filter cartridges made of synthetic non-woven cloth series FP-KFBV.

Overall dimensions

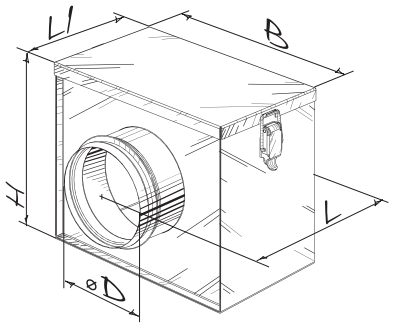

Model	Dimensions [mm]					Weight [kg]
	ØD	B	H	L	L1	
KFBV 100	99	233	175	215	123	1.4
KFBV 125	124	243	209	235	143	1.7
KFBV 150	149	293	237	250	158	2.2
KFBV 160	159	293	237	250	158	2.2
KFBV 200	199	343	279	275	183	3.1
KFBV 250	249	393	327	325	233	4.2
KFBV 315	314	453	392	425	333	6.3

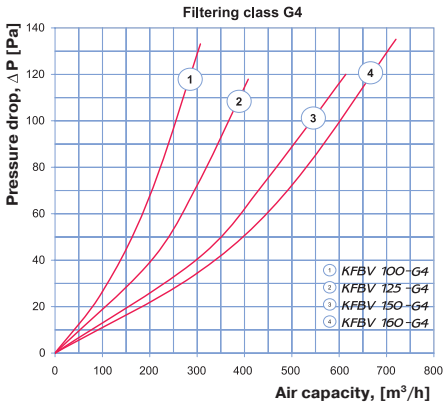

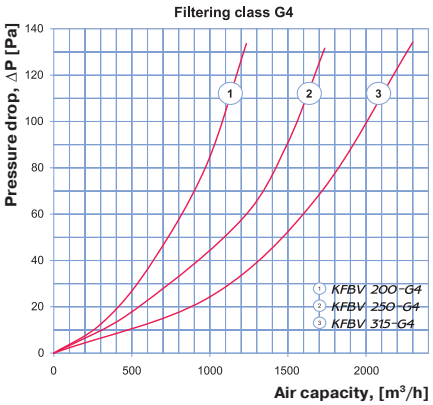

Filter boxes with bag filters

KFBT

for round ducts

Application

- For purification of supply or exhaust air in ventilation and air conditioning systems installed in various premises.
- Designed for protection of air ducts, heat exchangers, fans, controls and other ventilation system equipment against dust pollution.
- Prevent contamination of walls and ceilings located near the system.
- Can be used as pre-filters installed upstream to more efficient filters.
- Compatible with Ø100 up to 315 mm round air ducts.

Design

- Galvanized steel case.
- Airtight connection of the filter-box with air ducts due to connecting flanges with a rubber seal.
- Equipped with a replaceable filter bag made of synthetic non-woven cloth with filtration class G4, F5, F7.
- Filter cartridge is fixed on a steel wire frame.
- Quick access to replaceable filter cartridge due to lever locks on a swivel filter cover.

Mounting

- Fixing to round ducts with clamps.
- Any mounting position.
- In case of vertical mounting position provide air stream downwards to avoid filter jamming.
- While mounting provide extra space for free access to the filter for servicing.

Accessories

- G4, F5, F7 replaceable filter bags made of synthetic non-woven cloth series FP-KFBT.

Overall dimensions

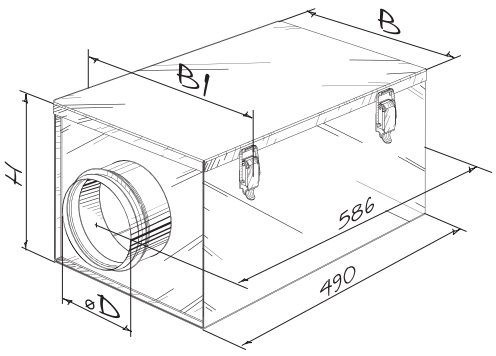

Model	Dimensions [mm]				Weight [kg]
	ØD	B	B1	H	
KFBT 100	99	210	230	170	2.41
KFBT 125	124	220	240	206	2.69
KFBT 150	149	270	290	236	3.20
KFBT 160	159	270	290	236	3.26
KFBT 200	199	320	340	276	3.76
KFBT 250	249	370	390	386	4.39
KFBT 315	314	430	450	390	5.17

Specifications

Filtering class G4

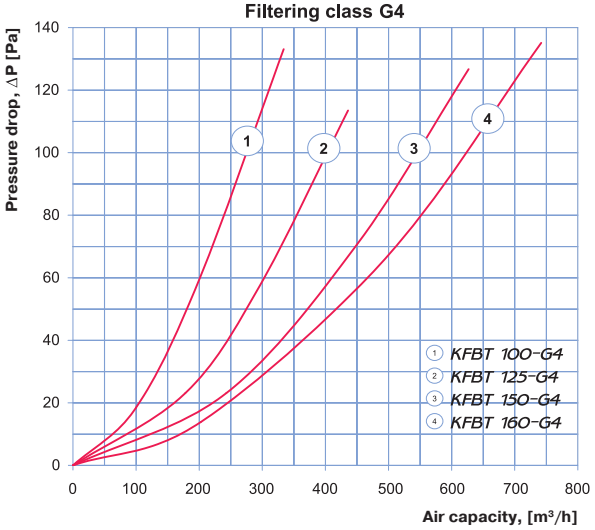

Filtering class G4

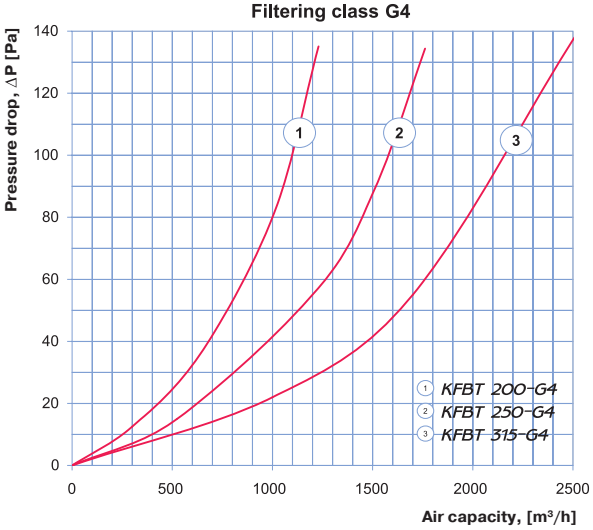

Filtering class F5

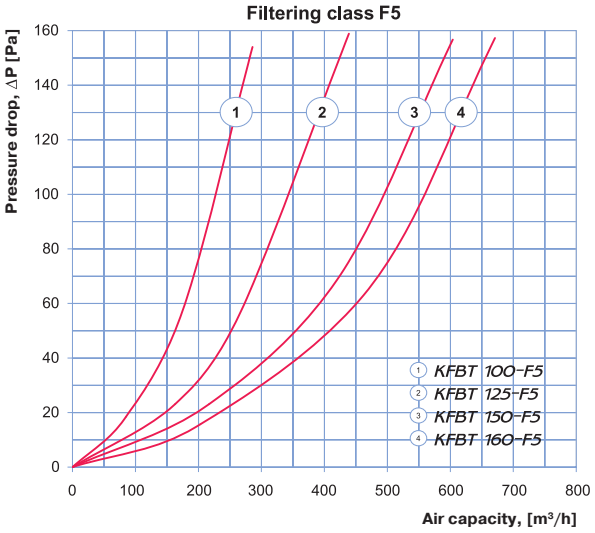

Filtering class F5

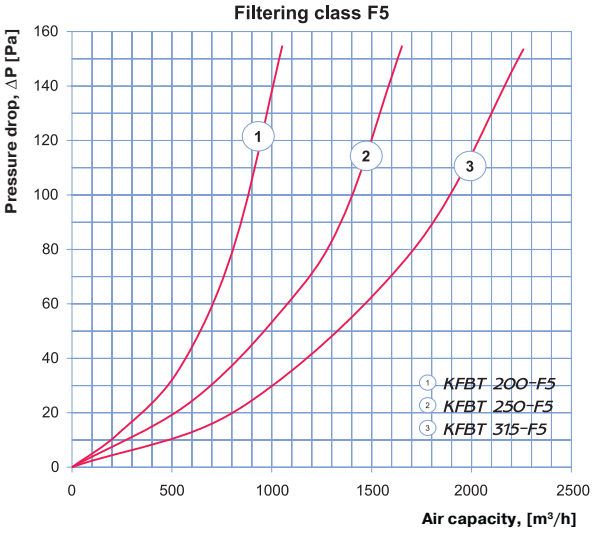

Filtering class F7

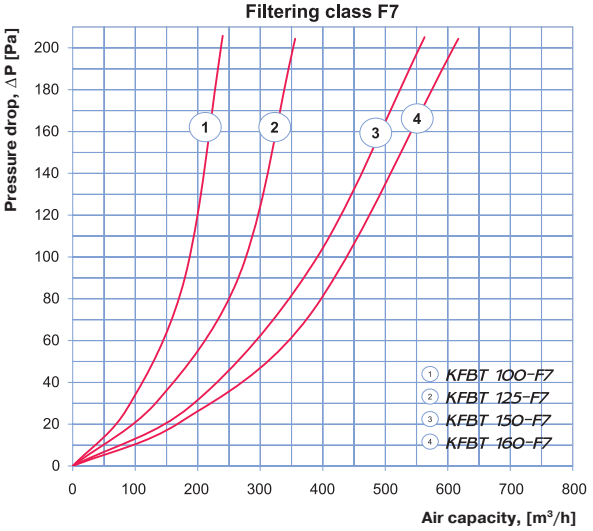

Filtering class F7

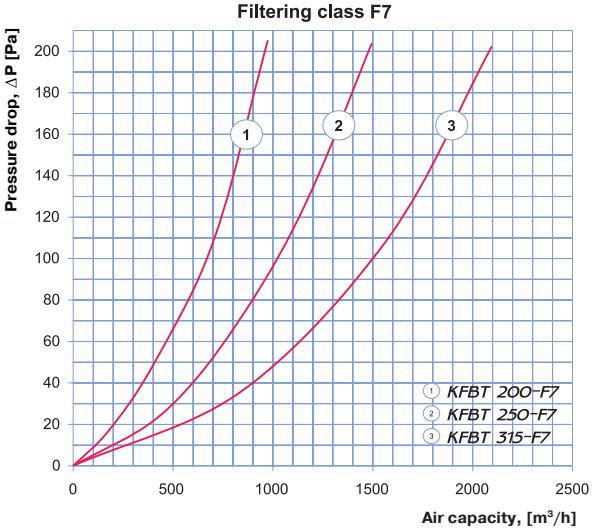

Filter boxes with bag filters

KFBT

for rectangular ducts

Application

- For purification of supply or exhaust air in ventilation and air conditioning systems installed in various premises.
- Designed for protection of air ducts, heat exchangers, fans, controls and other ventilation system equipment against dust pollution.
- Prevent contamination of walls and ceilings located near the system.
- Can be used as pre-filters installed upstream to more efficient filters.
- Compatible with 400x200 up to 1000x500 mm rectangular air ducts.

Design

- Galvanized steel case.
- Equipped with a replaceable filter bag made of synthetic non-woven cloth with filtration class G4, F5, F7.
- Filter cartridge is fixed on a steel wire frame.
- Quick access to replaceable filter cartridge due to lever locks on a swivel filter cover.

Mounting

- Fixing to rectangular ducts with flange connection.
- Any mounting position.
- In case of vertical mounting position provide air stream downwards to avoid filter jamming.
- While mounting provide extra space for free access to the filter for servicing.

Accessories

- G4, F5, F7 replaceable filter bags made of synthetic non-woven cloth series FP-KFBT.

Overall dimensions

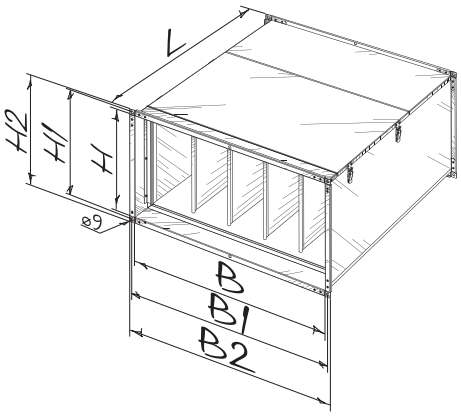

Model	Dimensions [mm]							Weight [kg]
	B	B1	B2	H	H1	H2	L	
KFBT 40x20	400	420	440	200	220	240	500	6.2
KFBT 50x25	500	520	540	250	270	290	600	7.8
KFBT 50x30	500	520	540	300	320	340	600	8.3
KFBT 60x30	600	620	640	300	320	340	600	8.9
KFBT 60x35	600	620	640	350	370	390	600	9.5
KFBT 70x40	700	720	740	400	420	440	720	16.2
KFBT 80x50	800	820	840	500	520	540	800	20.4
KFBT 90x50	900	920	940	500	520	540	800	21.7
KFBT 100x50	1000	1020	1040	500	570	540	800	23.5

Technical data

Filtering class G4

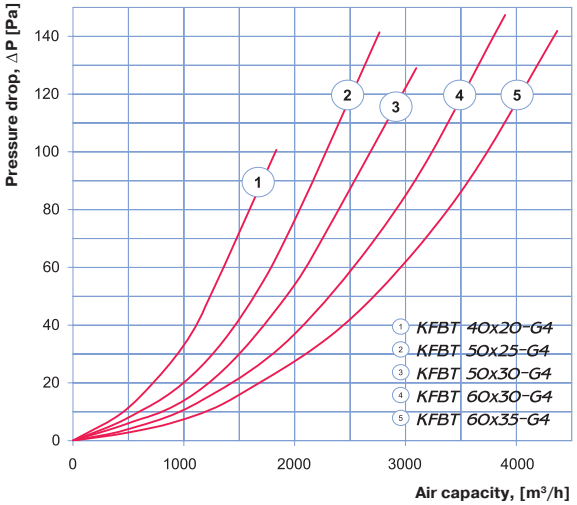

Filtering class G4

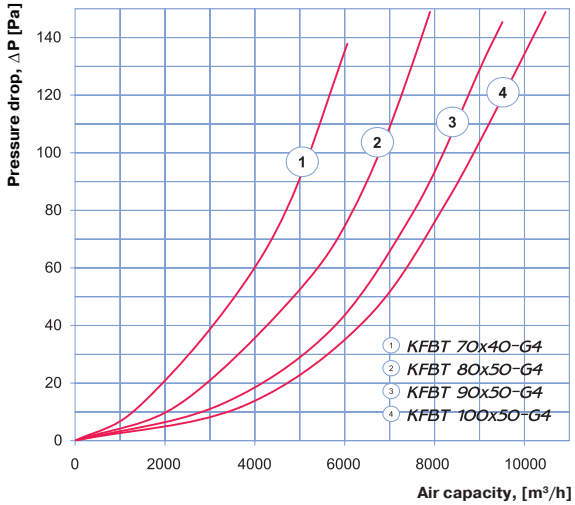

Filtering class F5

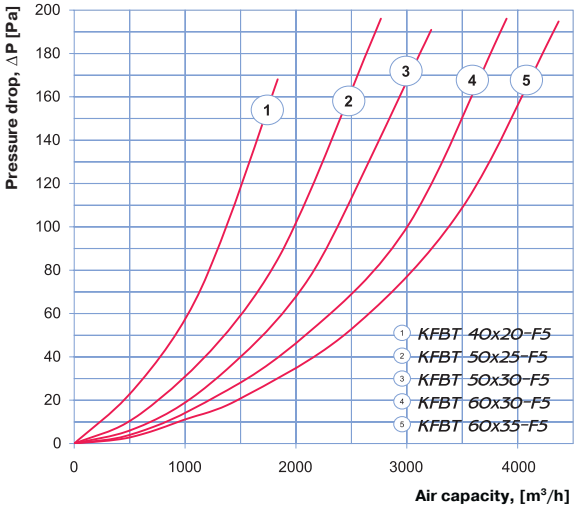

Filtering class F5

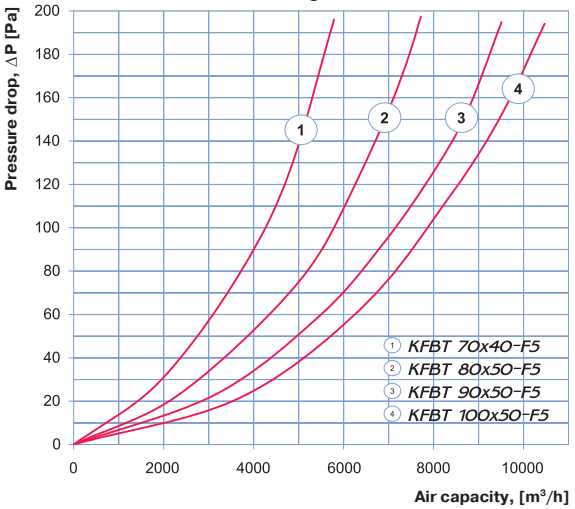

Filtering class F7

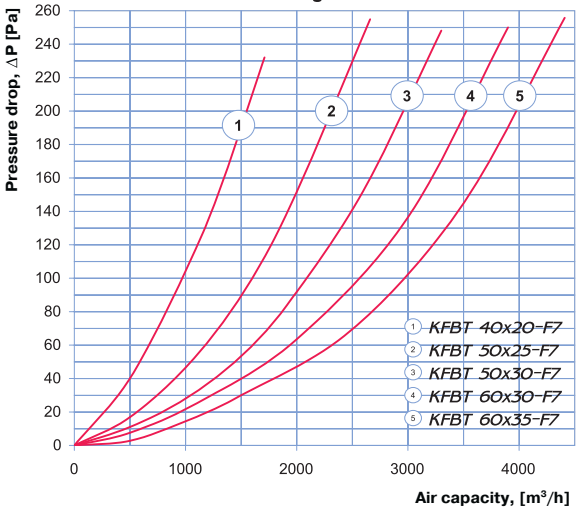

Filtering class F7

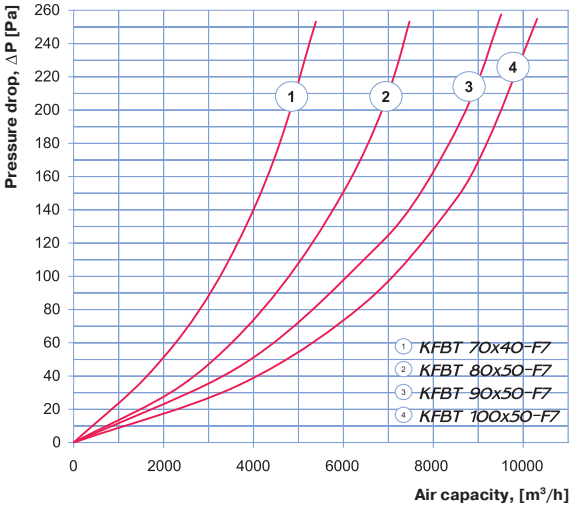

Filter boxes

KFBK

for rectangular ducts

Application

- For purification of supply or exhaust air in ventilation and air conditioning systems installed in various premises.
- Designed for protection of air ducts, heat exchangers, fans, controls and other ventilation system equipment against dust pollution.
- Prevent contamination of walls and ceilings located near the system.
- Can be used as pre-filters installed upstream to more efficient filters.
- Compatible with 400x200 up to 1000x500 mm rectangular air ducts.

Design

- Galvanized steel case.
- Equipped with a filter cartridge made of synthetic non-woven cloth with filtration class G4.
- Filter cartridge has manifold bending to increase the filtration surface and protected with a metal net against deformation with air pressure.
- Quick access to replaceable filter cartridge due to lever locks on a swivel filter cover.

Mounting

- Fixing to rectangular ducts with flange connection.
- Installed upstream to heater and fan following the air flow direction.
- While mounting provide extra space for free access to the filter for servicing.

Accessories

- G4 replaceable filter cartridges made of synthetic non-woven cloth series FP-KFBK.

Overall dimensions

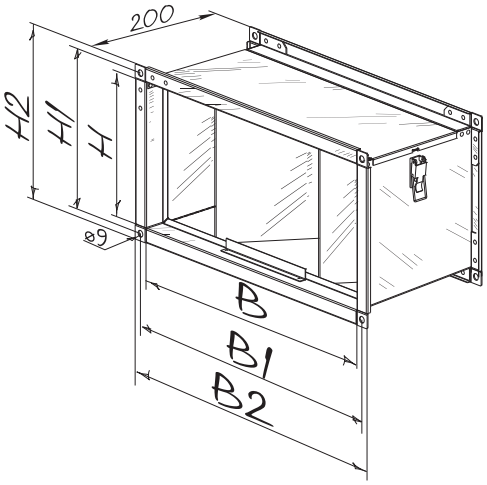

Model	Dimensions [mm]						Weight [kg]
	B	B1	B2	H	H1	H2	
KFBK 40x20	400	420	440	200	220	240	2.4
KFBK 50x25	500	520	540	250	270	290	4.1
KFBK 50x30	500	520	540	300	320	340	4.4
KFBK 60x30	600	620	640	300	320	340	5.2
KFBK 60x35	600	620	640	350	370	390	5.8
KFBK 70x40	700	720	740	400	420	440	6.7
KFBK 80x50	800	820	840	500	520	540	7.9
KFBK 90x50	900	920	940	500	520	540	8.4
KFBK 100x50	1000	1020	1040	500	520	540	8.9

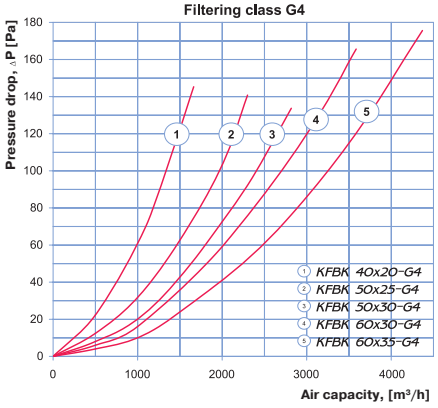

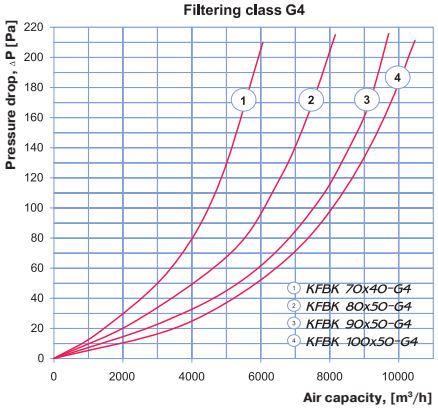

Clamps

KZ

for round ducts

Application

- For reliable fixing of ventilation system components.
- Compatible with 100 up to 315 mm round ventilation system components.

Design

- Made of galvanized steel band.
- Sealed with microporous rubber from inside for vibration absorption.

Mounting

- Fixed on round ventilation system components.
- Round ventilation system components are fixed by a clamp with two bolts.

Overall dimensions

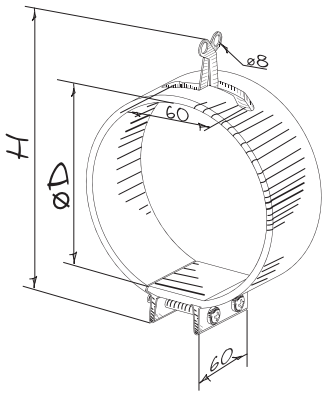

Model	Dimensions [mm]		Weight [kg]
	ØD	H	
KZ 100	100	172	0.21
KZ 125	125	198	0.23
KZ 150	150	224	0.3
KZ 160	160	232	0.36
KZ 200	200	274	0.42
KZ 250	250	326	0.55
KZ 315	315	380	0.65

Clamps

KZH

for round ducts

Application

- For reliable fixing of ventilation system components installed in various premises.
- Compatible with 100 up to 315 mm round ventilation system components.

Design

- Made of galvanized steel band.
- Sealed with microporous rubber from inside for vibration absorption.
- Equipped with a mounting bracket for fixing on wall or ceiling.

Mounting

- Fixed on round ventilation system components.
- Round ventilation system components are fixed by a clamp with a bolt.
- For installation on wall or ceiling use a mounting bracket fixed with dowels.

Overall dimensions

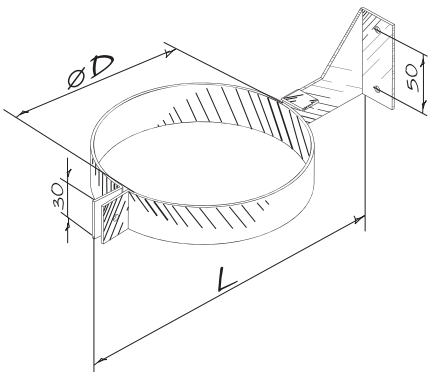

Model	Dimensions [mm]		Weight [kg]
	ØD	L	
KZH 100	100	204	0.21
KZH 125	125	229	0.22
KZH 150	150	254	0.25
KZH 160	160	264	0.26
KZH 200	200	304	0.31
KZH 250	250	354	0.35
KZH 315	315	419	0.42