SILENCE & ENERGY SAVING

Only 5.5 W*
25 dB(A)*

Aero Still 100
Aero Still 125
Aero Still 150

Aero Still Gold

Aero Still Chrome

Use
- Extract fan for low-noise applications

Application
- Residential premises
- Flats, cottages
- Offices
- Utility spaces
- Trade premises
- Restaurants
- Health care facilities
- Child care facilities

Features
- Wall and ceiling mounting
- Low energy consumption and noise
- Easy maintenance
- Continuous operation
- Backdraft damper
- Ball bearing motor
- Available in chrome (Aero Chrome) and gold (Aero Gold) decorations
- 5 year warranty

Options

Pull-cord switch

Pull-cord switch

Timer

- Turn-off delay adjustable from 2 to 30 min

Humidity sensor

- Humidity setpoint adjustable from 60 % up to 90 %.
- Turn-off delay adjustable from 2 to 30 min

Model	Pull-cord switch	Turn-off delay timer	Humidity sensor
Aero Still 100			
100 S	●		
100 T		●	
100 ST	●	●	
100 H		●	●
100 SH	●	●	●
Aero Still 125			
125 S	●		
125 T		●	
125 ST	●	●	
125 H		●	●
125 SH	●	●	●
Aero Still 150			
150 S	●		
150 T		●	
150 ST	●	●	
150 H		●	●
150 SH	●	●	●

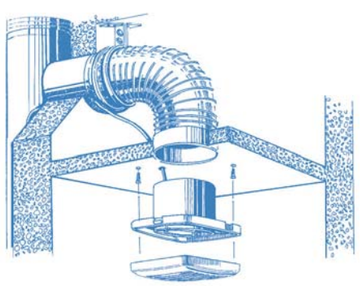

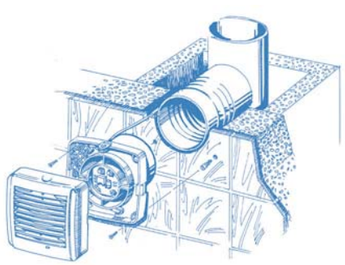

** for Aero Still 100*

BLAUBERG Ventilatoren

Overall and mounting dimensions

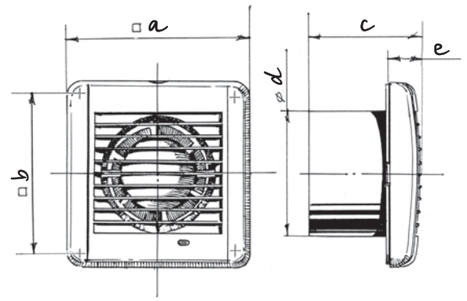

Model	Dimensions [mm]				
	a	b	c	d	e
Aero Still 100	144	122	92.5	100	29.5
Aero Still 125	168	144	97	125	30
Aero Still 150	198	170	119	150	30

Technical data

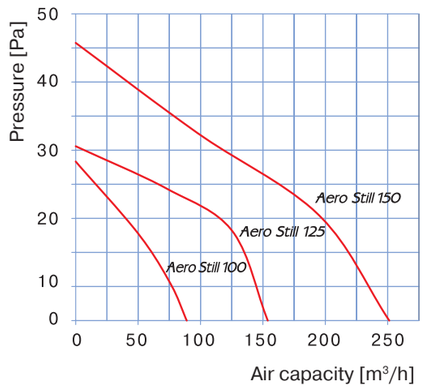

Parameters	Aero Still 100	Aero Still 125	Aero Still 150
Voltage [V]	220-240	220-240	220-240
Power [W]	5.5	9.4	19.0
Air capacity [m³/h]	84	158	254
Sound pressure level at 3 m [dB(A)]	25	31	33

IP 34

Packing