AXIS-P
AXIS-FP

Medium pressure axial fans
Axial smoke extraction fans

BLAUBERG Ventilatoren

CONTENTS

Complete solutions for axial fans	2
Medium pressure axial fans Axis-P	4
Axial smoke extraction fans Axis-FP	28
Fan accessories selection table	56

Complete solutions for axial fans

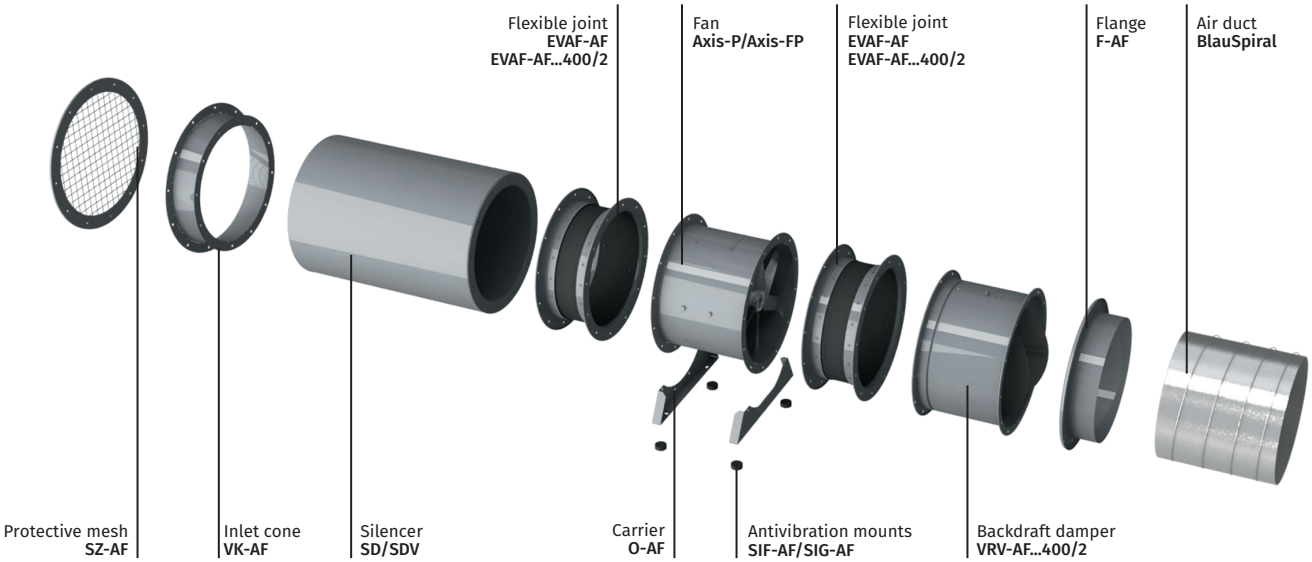

Installation example of axial fans on rooftop

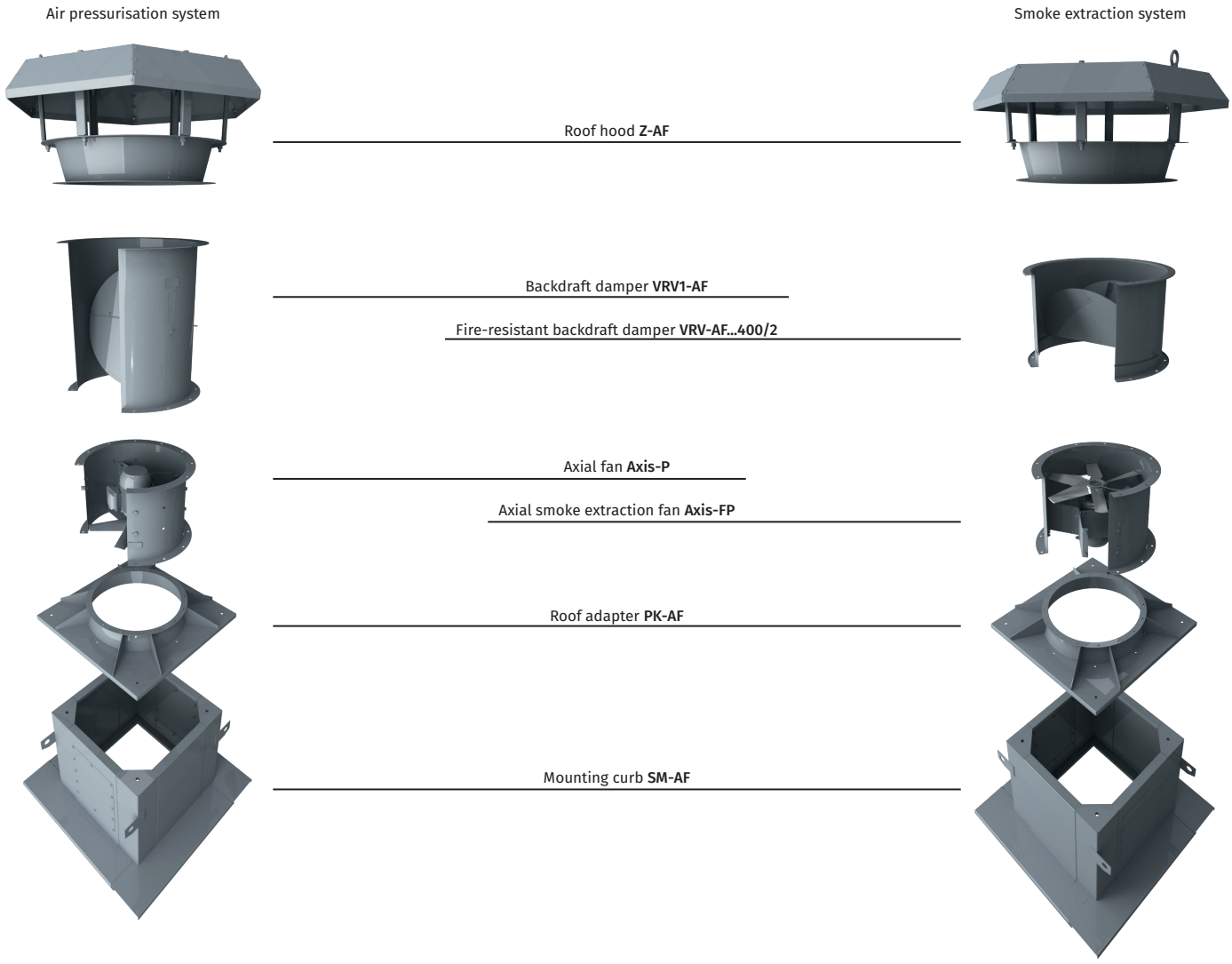

FAN INSTALLATION INTO AN AIR DUCT SYSTEM

- To ensure a uniform air flow the fan should be preceded by a straight duct section with a cross-section area equal to half of that of the fan. The length of the duct section should be 3 ÷ 4 D (D is the inner diameter of the fan). The length of the straight duct section downstream of the fan should be 1.5 ÷ 2 D.
- Reduction of the recommended duct length values results in a drop of the fan pressure and performance. To reduce noise and vibration use the VVGF flexible joints.

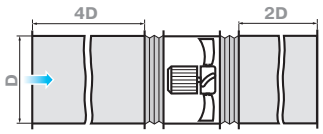

FAN INSTALLATION WITH NO UPSTREAM DUCTING

- Axial fans without upstream ducting must be equipped with the VK-AF inlet cone to improve the air flow parameters.

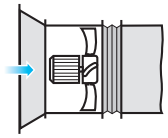

FAN INSTALLATION WITH NO DOWNSTREAM DUCTING

- If the axial fan is a terminal device of the ventilation system (i.e. there is no downstream ducting) the unit must be equipped with a diffuser to reduce the air flow velocity and the fan dynamic pressure. Reduction of the air discharge velocity results in a significant reduction of shock losses which are proportional to the square of velocity decrement.
- The fan should not be equipped with a downstream contractor.

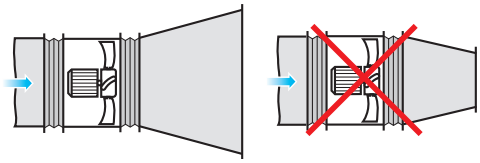

INSTALLATION NEAR BENDS

- To install the fan directly downstream of a bend (elbow) use a curved section with a large bending radius or an array of internal guide vanes.

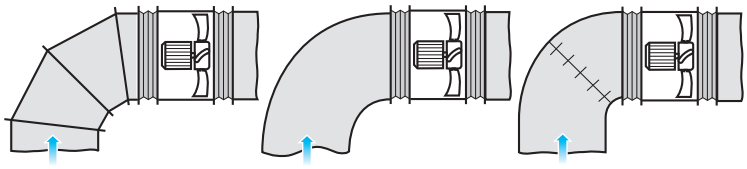

CHANGING DIAMETER INSTALLATION

- When changing from a smaller diameter to a larger one use a connector diffuser with the maximum opening angle of 12°.

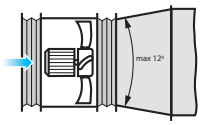

OBSTRUCTED SPACE INSTALLATION

- To ensure normal operation of the fan in an obstructed space make sure to provide for a sufficient distance between the inlet and outlet flanges and the floor, walls, bulky equipment and obstacles.

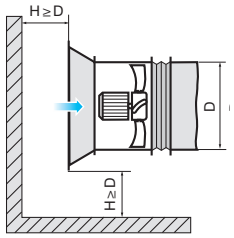

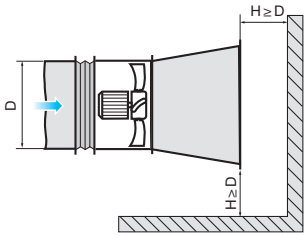

Axis-P

Medium pressure axial fans

Use

The fans are used:

- as a part of a smoke extraction system for air pressurization to create a positive air pressure differential in stairway enclosures, airlock vestibules and lift shafts, to prevent spreading of smoke in premises, protect people using evacuation routes from fire hazards and enable conditions for fire-extinguishing measures.
- in general ventilation systems in industrial, administrative and residential buildings.

Air flow:
up to 113 000 m³/h

ErP 2015

Design

- The metal casing with rolled flanges helps achieve outstanding rigidity and minimum clearances between the casing and the blades. There is an inspection hatch in the casing for easy maintenance.
- All the casing components are powder coated for improved protection against the environmental effects.
- The weight of the fans may differ from the one stated in the catalogue and depends on the components used (motor, terminal box, etc.).

Motor

- The fans are equipped with three-phase (400 V/50 Hz) single-speed 2-, 4- or 6-pole electric motors.
- Motor with energy efficiency class IE3 on request.

Impeller

- Depending on the size and the required air capacity the fans are equipped with impellers with 6 or 8 blades angled from 20° to 50° with from 2.5 up to 5° stepping to ensure precise matching of fans with the operating point.
- The specially designed impeller blades ensure high efficiency of the fan while keeping noise well under control. The impellers are dynamically balanced. Low weight and low moment of the impeller inertia help reduce the fan start-up time.
- The fan blades can be made of the following materials:
  - PAG – fiberglass reinforced polyamide;
  - AL – aluminium.
- Please confirm the blade material while placing your order..

Mounting

- The fans can be mounted on any flat surface or directly into a ventilation duct. The units are suitable for both horizontal and vertical configurations. In-duct installation requires flanges to attach the fan to the ductwork.
- To attach the fan to the floor, a wall or the ceiling use the O-AF carriers (not included as standard, should be purchased separately).
- The units are suitable for installation on rooftops to provide direct supply of outdoor air to the stairway areas.

Accessories

Carrier	Flange	Flexible joint	Hood	Roof adapter	Mounting curb	Inlet cone
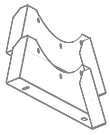	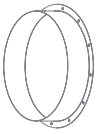	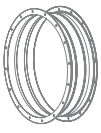	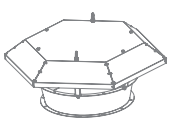	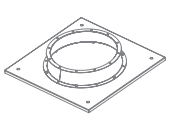	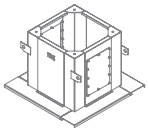	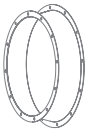
O-AF	F-AF	EVAF-AF	Z-AF	PK-AF	SM-AF	VK-AF

Designation key

	Casing	Motor		Impeller			Modification		
AXIS-P	630	K -	2	D / 5.5 -	8	/ 35 / AL -	U	1 -	K

Axis-P: axial pressurisation fan

Standard size (duct diameter) [mm]

Modification:
_: standard casing;
K: shortened casing

Number of the motor poles

Motor phase:
E: single-phase;
D: three-phase

Motor power [kW]

Number of the impeller blades [items]

Blade setting angle [°]

Blade material
PAG: fiberglass reinforced polyamide
AL: aluminium

Climatic category:
U: moderate climate (-40 ... +40 °C)
HL: cold climate (-60 ... +40 °C)
UHL: moderate and cold climate (-60 ... +40 °C)
T: tropical climate (-10 ... +50 °C)
M: maritime moderately cold climate (-40 ... +40 °C)
O: general climatic modification (except maritime climate) (-60 ... +50 °C)
OM: general maritime climatic modification (-40 ... +40 °C)
V: universal climatic modification (-60 ... +50 °C)

Placement category:
1: outdoors
2: under a shed or indoors with the same conditions as outdoors except solar radiation and precipitation
3: in closed rooms without artificial climate control
4: in closed rooms with artificial climate control (ventilation, heating)
5: in rooms with high levels of humidity, without climate control

Terminal box:
_: electric connection on the terminal box on the motor
K: external terminal box on the fan casing

Accessories

Backdraft damper		Silencer		Protective mesh	Anti-vibration mount	
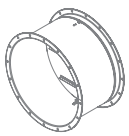	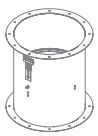	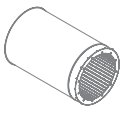	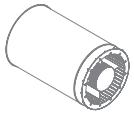	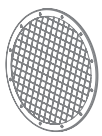	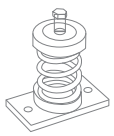	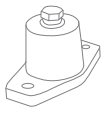
VRV-AF	VRV1-AF	SD	SDV	SZ-AF	SIF-AF	SIG-AF

Technical data

AXIS-P 400-4

Size	Number of poles	Voltage [V / 50 Hz]	Fan model with aluminum blades impeller (AL)	Fans model with fiberglass reinforced polyamide blades impeller (PAG)	Installed motor power Ny [kW]	RPM [min⁻¹]	Number of blades	Blade setting angle [°]	Weight [kg]	Lenght L [mm]	Curve number on graph
400	4	3~400	Axis-P 400-4D/0.12-6/30/AL	Axis-P 400-4D/0.12-6/30/PAG	0.12	1440	6	30	19.5	350	①
			Axis-P 400-4D/0.18-6/35/AL	Axis-P 400-4D/0.18-6/35/PAG	0.18	1440	6	35	19.8	350	②
			Axis-P 400-4D/0.18-6/40/AL	Axis-P 400-4D/0.18-6/40/PAG	0.18	1440	6	40	19.8	350	③
			Axis-P 400-4D/0.25-6/45/AL	Axis-P 400-4D/0.25-6/45/PAG	0.25	1440	6	45	23.2	350	④
			Axis-P 400-4D/0.37-8/45/AL	Axis-P 400-4D/0.37-8/45/PAG	0.37	1440	8	45	23.9	350	⑤

Aerodynamic characteristics

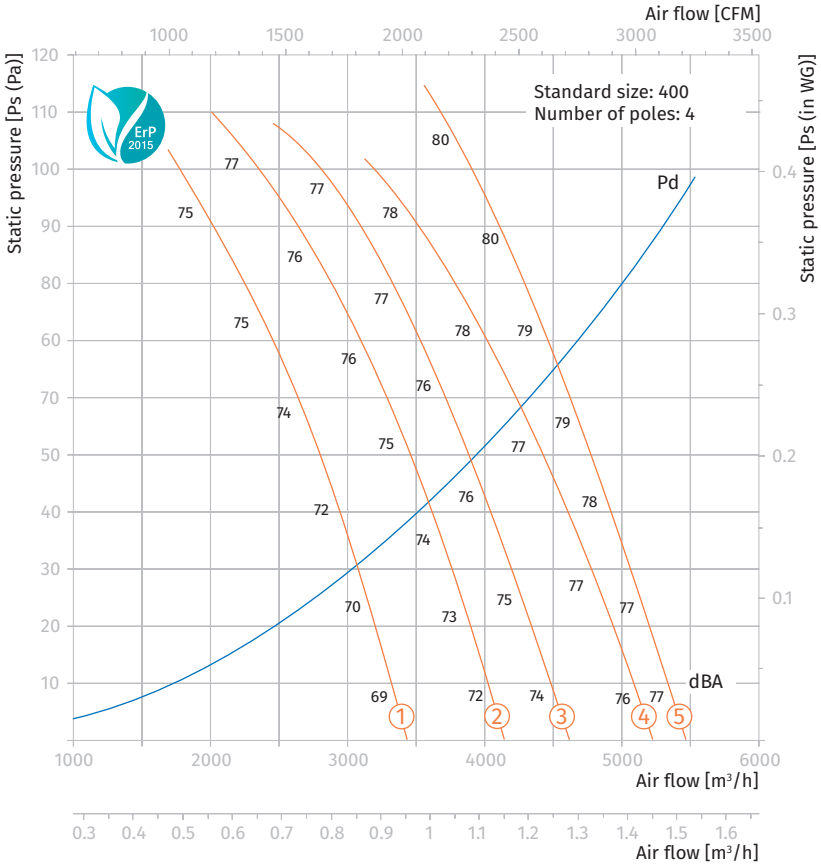

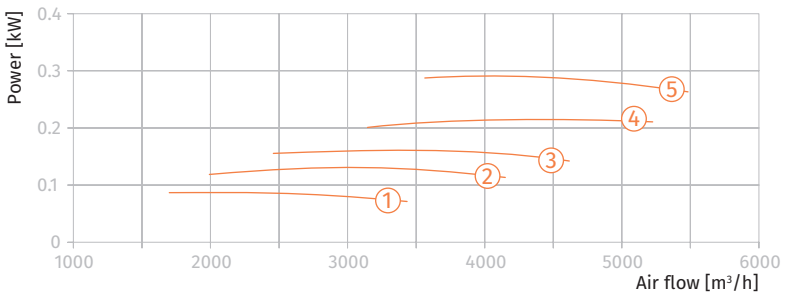

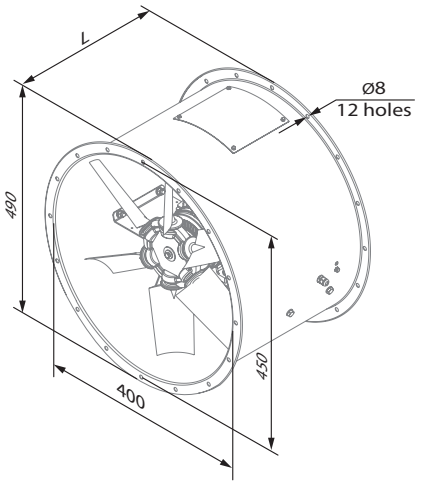

Axis-P 400-4

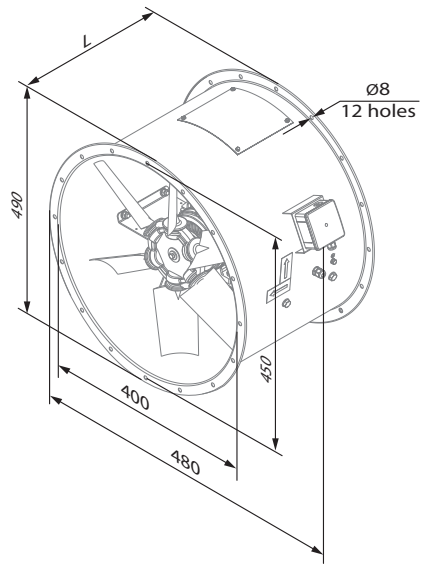

Axis-P 400-4...-K

AXIS-P 400

Technical data

AXIS-P 400-2

Size	Number of poles	Voltage [V / 50 Hz]	Fan model with aluminum blades impeller (AL)	Fans model with fiberglass reinforced polyamide blades impeller (PAG)	Installed motor power Ny [kW]	RPM [min⁻¹]	Number of blades	Blade setting angle [°]	Weight [kg]	Lenght L [mm]	Curve number on graph
400	2	3~400	-	Axis-P 400-2D/0.55-6/25/PAG	0.55	2880	6	25	23.4	350	①
			Axis-P 400-2D/0.75-6/30/AL	Axis-P 400-2D/0.75-6/30/PAG	0.75	2880	6	30	26.5	350 (450*)	②
			Axis-P 400-2D/1.1-6/35/AL	Axis-P 400-2D/1.1-6/35/PAG	1.1	2880	6	35	27.0	450	③
			Axis-P 400-2D/1.5-6/40/AL	Axis-P 400-2D/1.5-6/40/PAG	1.5	2880	6	40	32.5	450	④
			Axis-P 400-2D/2.2-6/45/AL	Axis-P 400-2D/2.2-6/45/PAG	2.2	2880	6	45	34.5	450	⑤
			Axis-P 400-2D/2.2-8/45/AL	Axis-P 400-2D/2.2-8/45/PAG	2.2	2880	8	45	35.0	450	⑥

* Including a motor with energy efficiency IE3

Aerodynamic characteristics

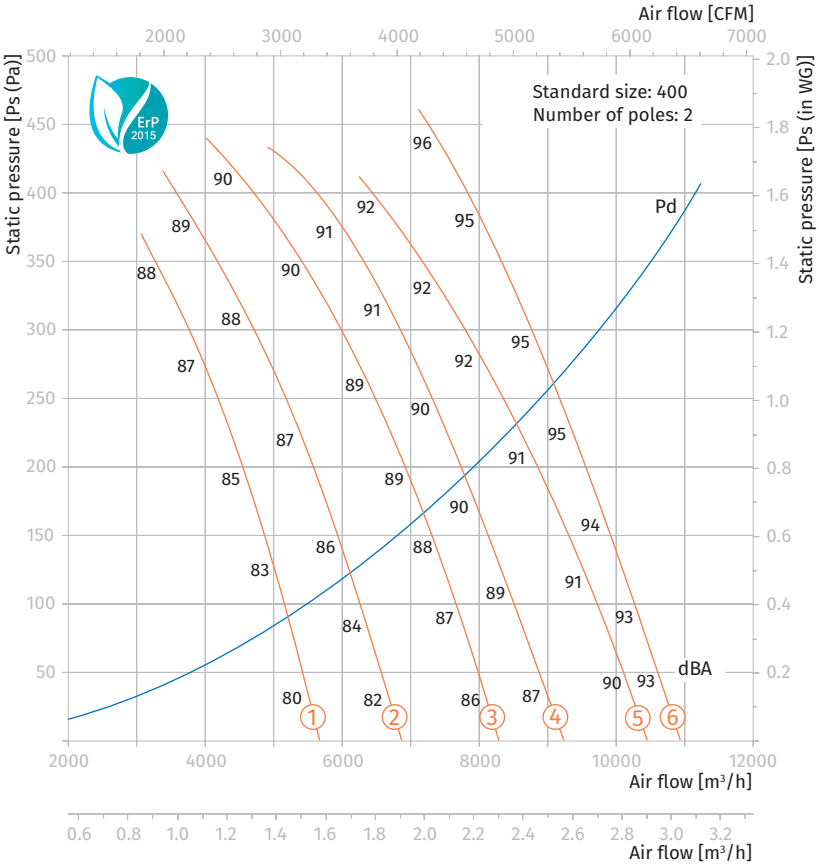

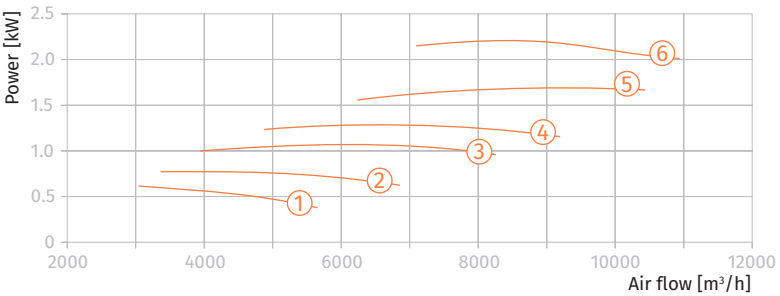

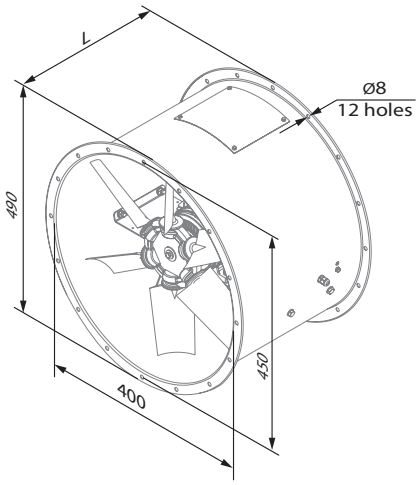

Axis-P 400-2

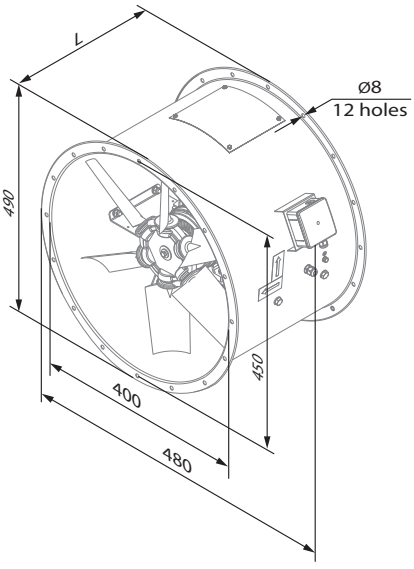

Axis-P 400-2...-K

Technical data

AXIS-P 450-4

Size	Number of poles	Voltage [V / 50 Hz]	Fan model with aluminum blades impeller (AL)	Fans model with fiberglass reinforced polyamide blades impeller (PAG)	Installed motor power Ny [kW]	RPM [min⁻¹]	Number of blades	Blade setting angle [°]	Weight [kg]	Lenght L [mm]	Curve number on graph
450	4	3~400	-	Axis-P 450-4D/0.12-6/25/PAG	0.12	1440	6	25	29.1	350	①
			Axis-P 450-4D/0.18-6/30/AL	Axis-P 450-4D/0.18-6/30/PAG	0.18	1440	6	30	29.4	350	②
			Axis-P 450-4D/0.25-6/35/AL	Axis-P 450-4D/0.25-6/35/PAG	0.25	1440	6	35	32.8	350	③
			Axis-P 450-4D/0.25-6/40/AL	Axis-P 450-4D/0.25-6/40/PAG	0.25	1440	6	40	32.8	350	④
			Axis-P 450-4D/0.37-6/45/AL	Axis-P 450-4D/0.37-6/45/PAG	0.37	1440	6	45	33	350	⑤
			Axis-P 450-4D/0.55-8/45/AL	Axis-P 450-4D/0.55-8/45/PAG	0.55	1440	8	45	36.6	350 (450*)	⑥

* Including a motor with energy efficiency IE3

Aerodynamic characteristics

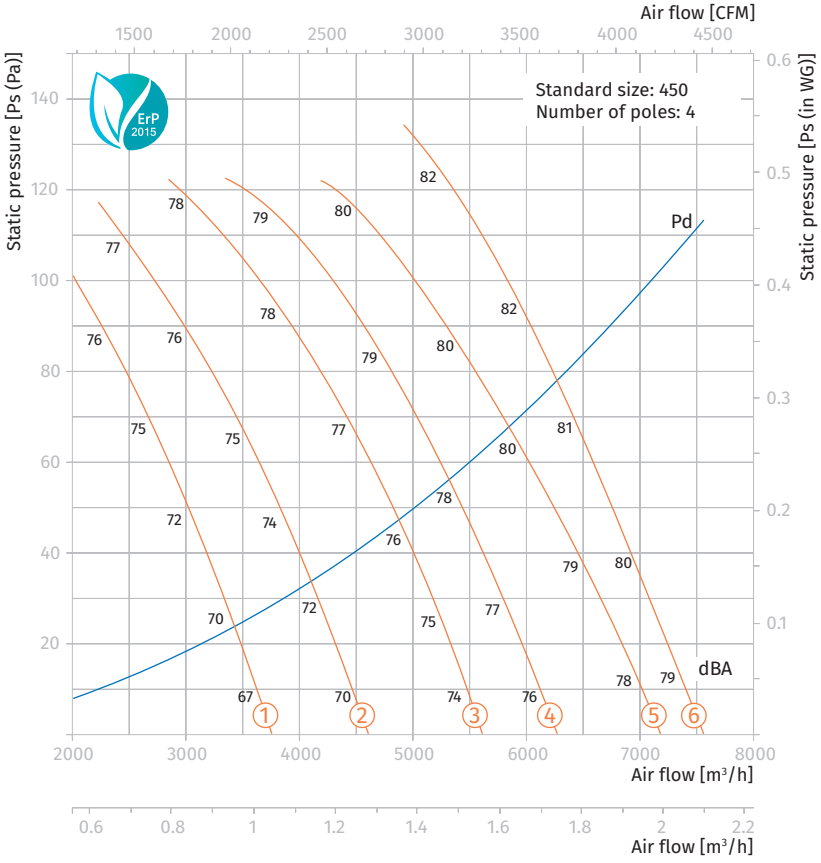

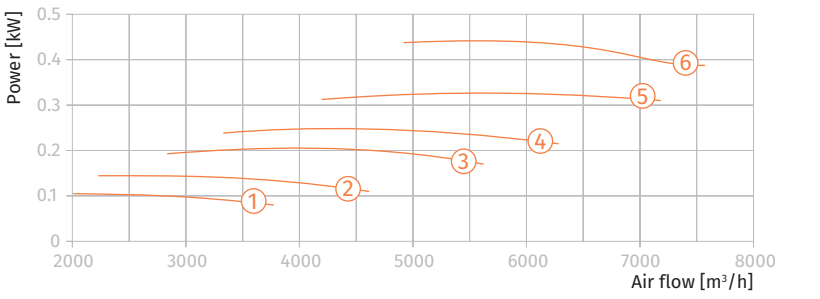

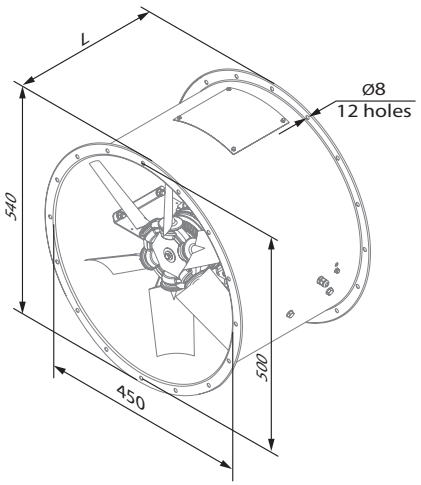

Axis-P 450-4

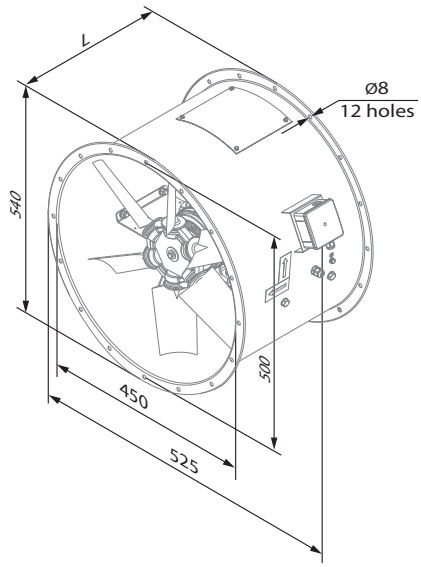

Axis-P 450-4...-K

AXIS-P 450

Technical data

AXIS-P 450-2

Size	Number of poles	Voltage [V / 50 Hz]	Fan model with aluminum blades impeller (AL)	Fans model with fiberglass reinforced polyamide blades impeller (PAG)	Installed motor power Ny [kW]	RPM [min⁻¹]	Number of blades	Blade setting angle [°]	Weight [kg]	Lenght L [mm]	Curve number on graph
450	2	3~400	-	Axis-P 450-2D/0.75-6/25/PAG	0.75	2880	6	25	36.1	350 (450*)	①
			Axis-P 450-2D/1.1-6/30/AL	Axis-P 450-2D/1.1-6/30/PAG	1.1	2880	6	30	36.6	450	②
			Axis-P 450-2D/1.5-6/35/AL	Axis-P 450-2D/1.5-6/35/PAG	1.5	2880	6	35	42.1	450	③
			Axis-P 450-2D/2.2-6/40/AL	Axis-P 450-2D/2.2-6/40/PAG	2.2	2880	6	40	44.1	450	④
			Axis-P 450-2D/3-8/40/AL	Axis-P 450-2D/3-8/40/PAG	3	2880	8	40	53.6	450 (550*)	⑤
			Axis-P 450-2D/4-8/45/AL	Axis-P 450-2D/4-8/45/PAG	4	2880	8	45	63.7	550	⑥

* Including a motor with energy efficiency IE3

Aerodynamic characteristics

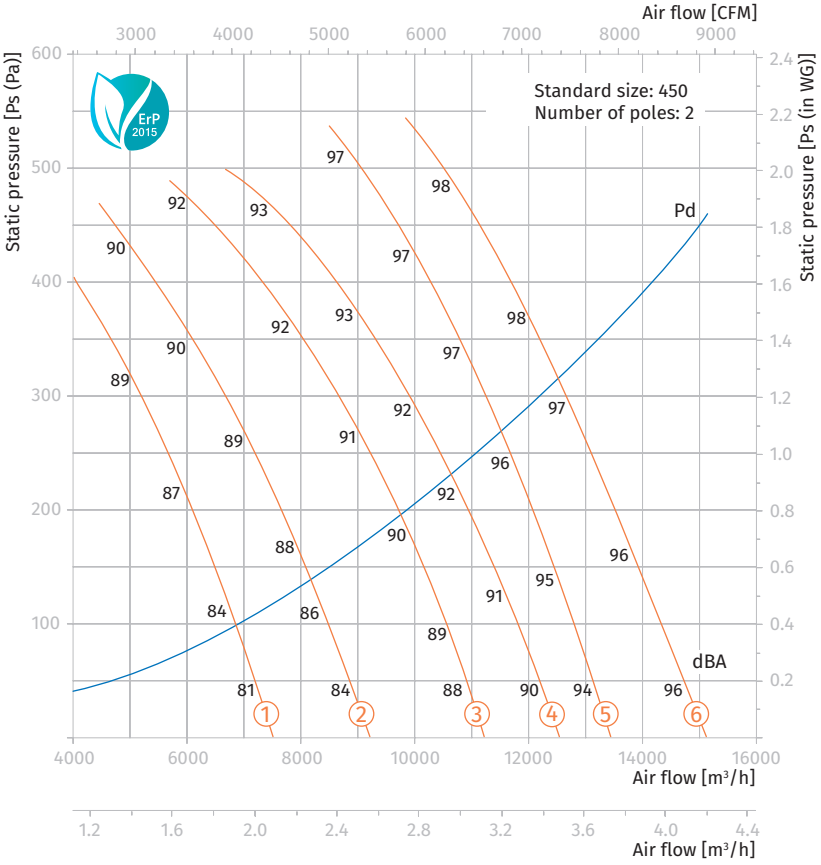

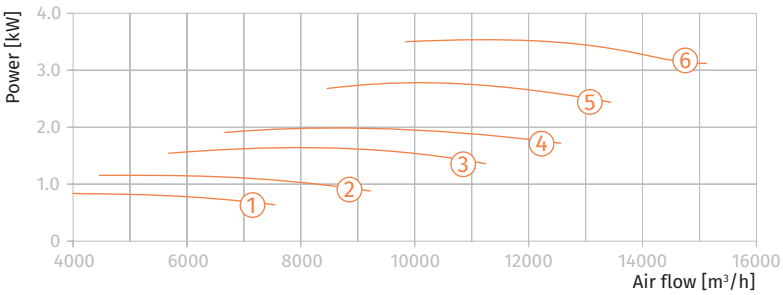

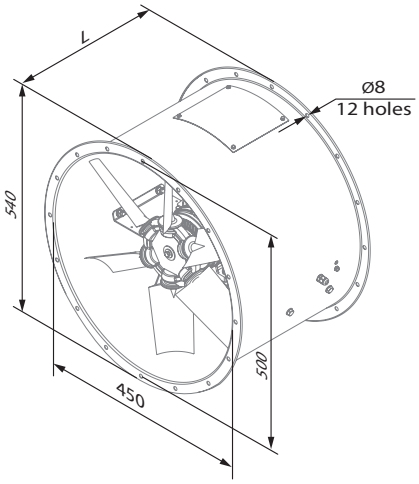

Axis-P 450-2

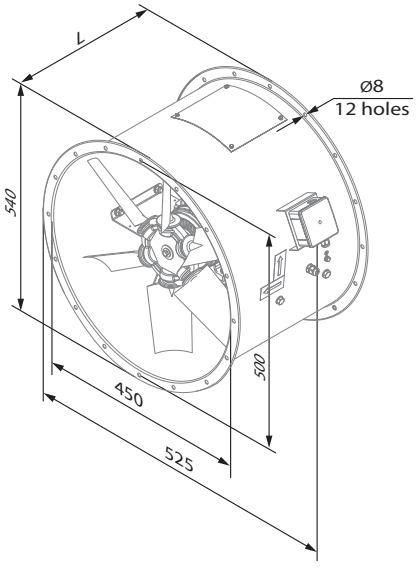

Axis-P 450-2...-K

Technical data

AXIS-P 500-4

Size	Number of poles	Voltage [V / 50 Hz]	Fan model with aluminum blades impeller (AL)	Fans model with fiberglass reinforced polyamide blades impeller (PAG)	Installed motor power Ny [kW]	RPM [min⁻¹]	Number of blades	Blade setting angle [°]	Weight [kg]	Lenght L [mm]	Curve number on graph
500	4	3~400	-	Axis-P 500-4D/0.18-6/25/PAG	0.18	1440	6	25	61.5	350	①
			Axis-P 500-4D/0.25-6/30/AL	Axis-P 500-4D/0.25-6/30/PAG	0.25	1440	6	30	61.7	350	②
			Axis-P 500-4D/0.37-6/35/AL	Axis-P 500-4D/0.37-6/35/PAG	0.37	1440	6	35	64.8	350	③
			Axis-P 500-4D/0.37-6/40/AL	Axis-P 500-4D/0.37-6/40/PAG	0.37	1440	6	40	64.8	350	④
			Axis-P 500-4D/0.55-6/45/AL	Axis-P 500-4D/0.55-6/45/PAG	0.55	1440	6	45	65.6	450	⑤
			Axis-P 500-4D/0.75-8/45/AL	Axis-P 500-4D/0.75-8/45/PAG	0.75	1440	8	45	71.4	450	⑥

* Including a motor with energy efficiency IE3

Aerodynamic characteristics

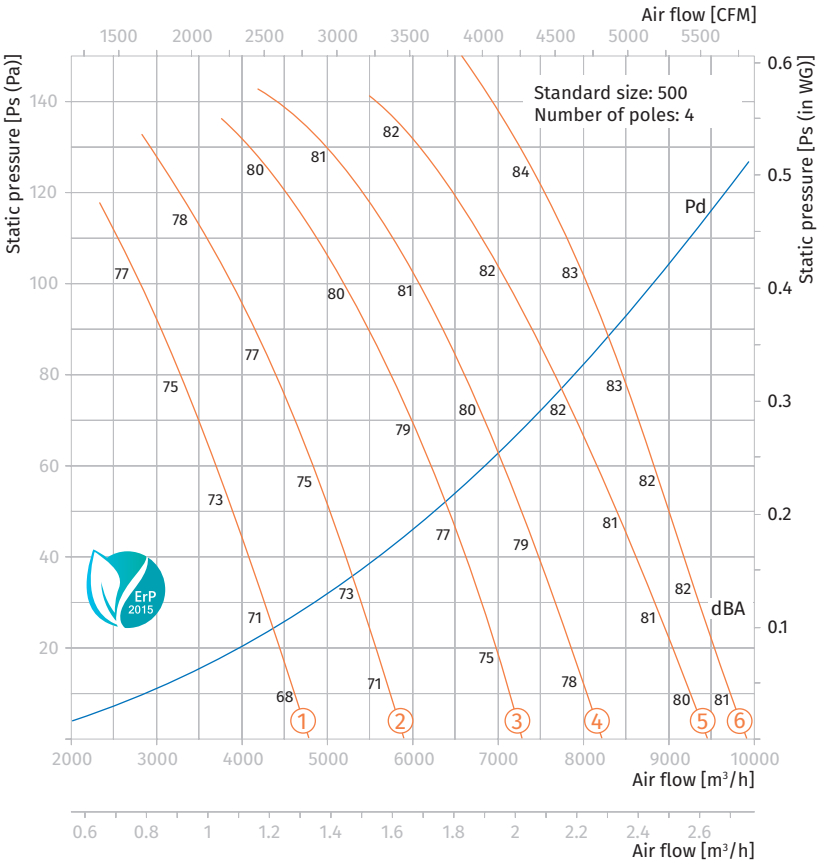

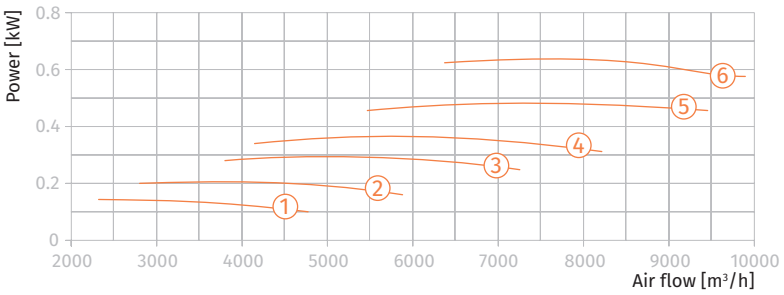

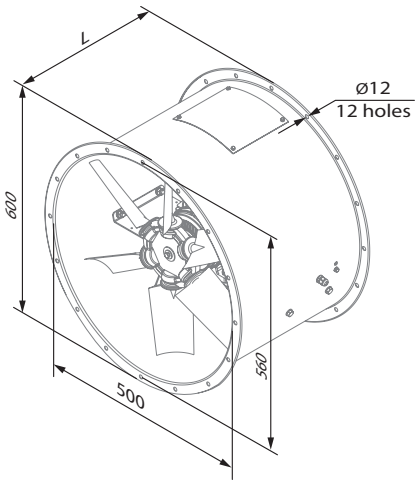

Axis-P 500-4

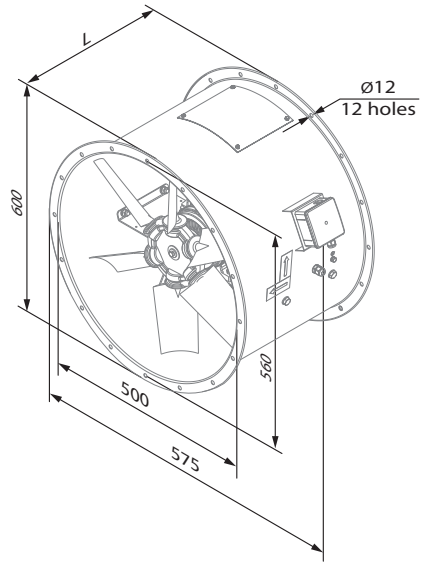

Axis-P 500-4...-K

AXIS-P 500

Technical data

AXIS-P 500-2

Size	Number of poles	Voltage [V / 50 Hz]	Fan model with aluminum blades impeller (AL)	Fans model with fiberglass reinforced polyamide blades impeller (PAG)	Installed motor power Ny [kW]	RPM [min⁻¹]	Number of blades	Blade setting angle [°]	Weight [kg]	Lenght L [mm]	Curve number on graph
500	2	3~400	-	Axis-P 500-2D/1.1-6/25/PAG	1.1	2880	6	25	48.2	450	①
			Axis-P 500-2D/1.5-6/30/AL	Axis-P 500-2D/1.5-6/30/PAG	1.5	2880	6	30	53.7	450	②
			Axis-P 500-2D/2.2-6/35/AL	Axis-P 500-2D/2.2-6/35/PAG	2.2	2880	6	35	55.7	450	③
			Axis-P 500-2D/3-8/35/AL	Axis-P 500-2D/3-8/35/PAG	3	2880	8	35	65.3	450 (550*)	④
			Axis-P 500-2D/4-8/40/AL	Axis-P 500-2D/4-8/40/PAG	4	2880	8	40	75.4	550	⑤
			Axis-P 500-2D/5.5-8/45/AL	Axis-P 500-2D/5.5-8/45/PAG	5.5	2880	8	45	96.8	550	⑥

* Including a motor with energy efficiency IE3

Aerodynamic characteristics

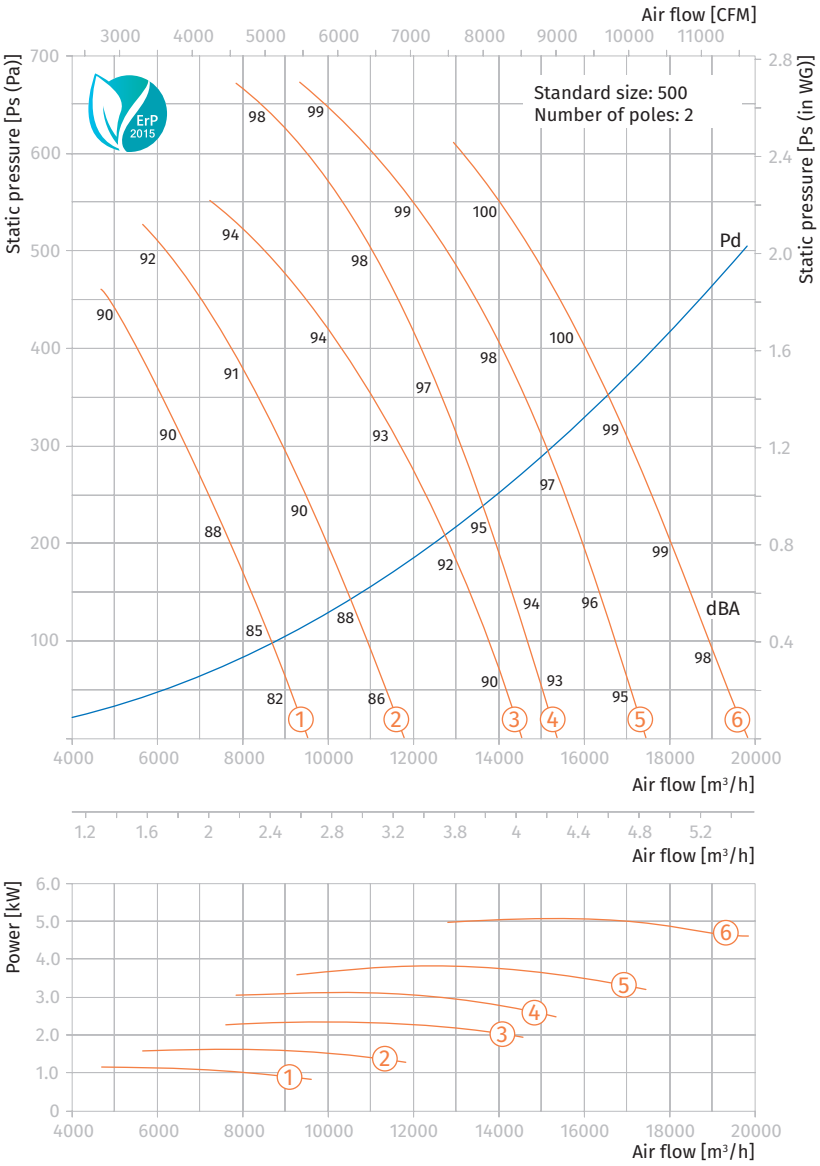

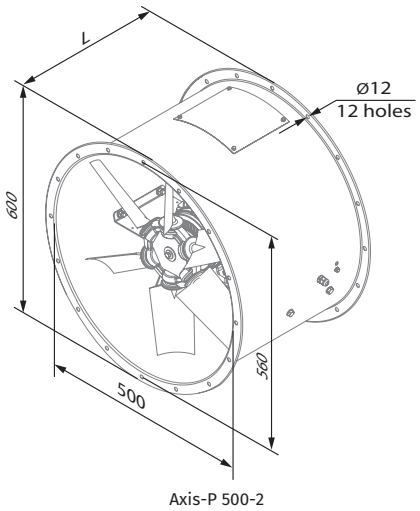

Axis-P 500-2

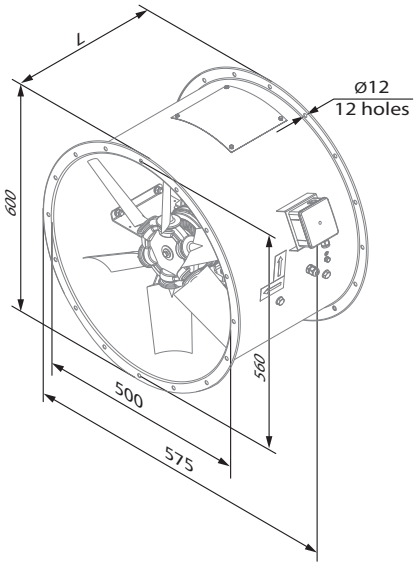

Axis-P 500-2...-K

Technical data

AXIS-P 560-4

Size	Number of poles	Voltage [V / 50 Hz]	Fan model with aluminum blades impeller (AL)	Fans model with fiberglass reinforced polyamide blades impeller (PAG)	Installed motor power Ny [kW]	RPM [min⁻¹]	Number of blades	Blade setting angle [°]	Weight [kg]	Lenght L [mm]	Curve number on graph
560	4	3~400	-	Axis-P 560-4D/0.25-6/25/PAG	0.25	1440	6	25	61.5	350	①
			Axis-P 560-4D/0.37-6/30/AL	Axis-P 560-4D/0.37-6/30/PAG	0.37	1440	6	30	61.7	350	②
			Axis-P 560-4D/0.55-6/35/AL	Axis-P 560-4D/0.55-6/35/PAG	0.55	1440	6	35	64.8	350 (450*)	③
			Axis-P 560-4D/0.55-6/40/AL	Axis-P 560-4D/0.55-6/40/PAG	0.55	1440	6	40	64.8	350 (450*)	④
			Axis-P 560-4D/0.75-6/45/AL	Axis-P 560-4D/0.75-6/45/PAG	0.75	1440	6	45	65.6	450	⑤
			Axis-P 560-4D/1.1-8/45/AL	Axis-P 560-4D/1.1-8/45/PAG	1.1	1440	8	45	71.4	450	⑥

* Including a motor with energy efficiency IE3

Aerodynamic characteristics

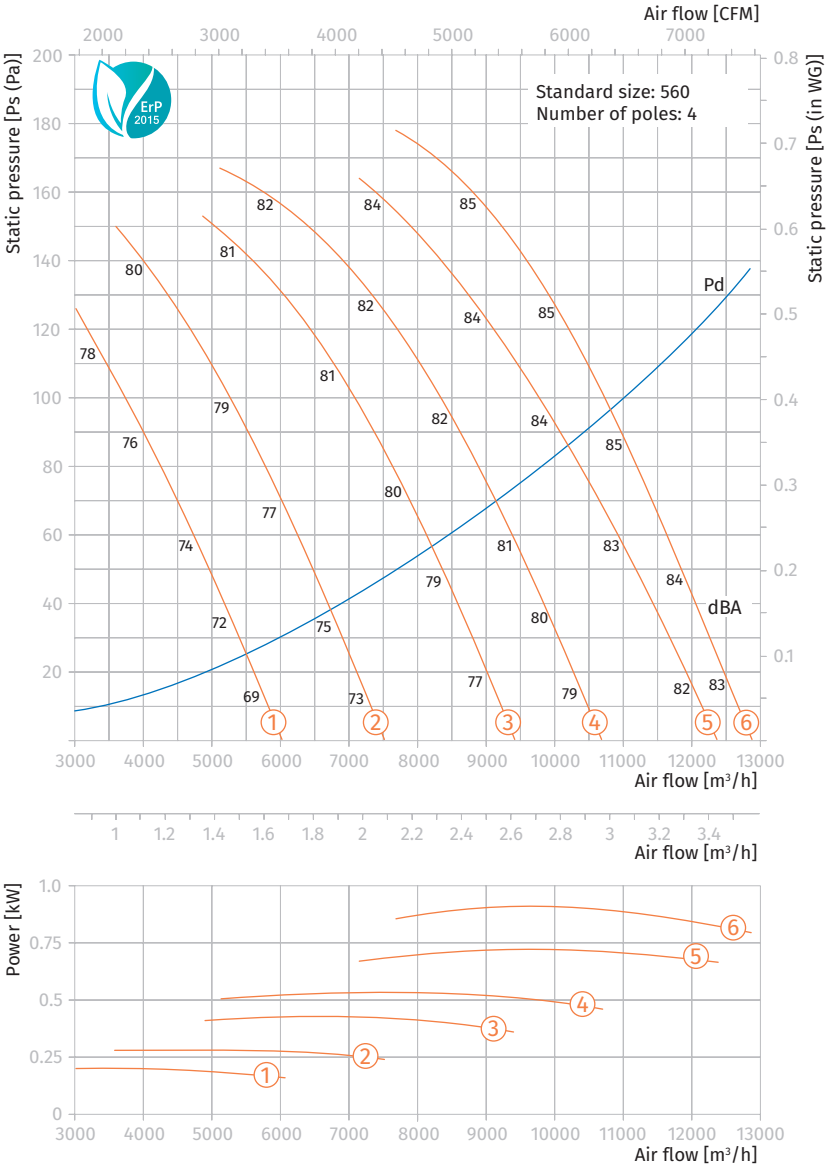

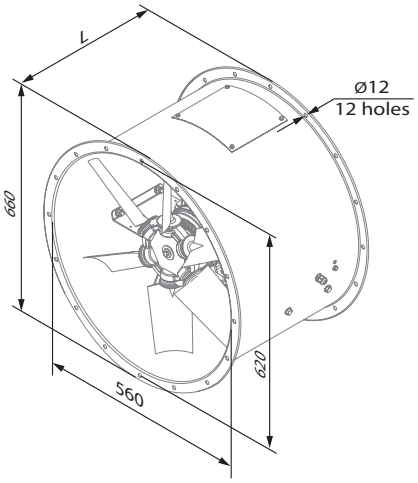

Axis-P 560-4

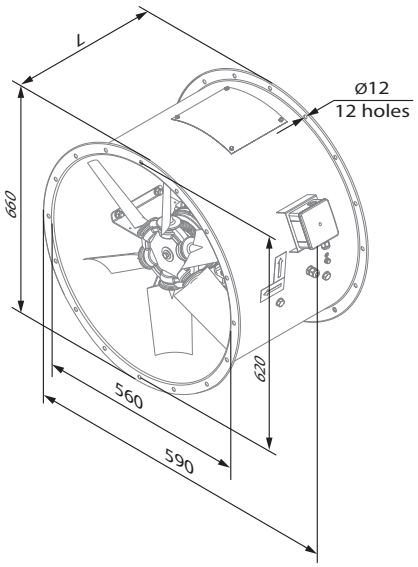

Axis-P 560-4 ...-K

Technical data

AXIS-P 560-2

Size	Number of poles	Voltage [V / 50 Hz]	Fan model with aluminum blades impeller (AL)	Fans model with fiberglass reinforced polyamide blades impeller (PAG)	Installed motor power Ny [kW]	RPM [min⁻¹]	Number of blades	Blade setting angle [°]	Weight [kg]	Lenght L [mm]	Curve number on graph
560	2	3~400	-	Axis-P 560-2D/1.5-6/25/PAG	1.5	2880	6	25	70.8	450	①
			Axis-P 560-2D/2.2-6/30/AL	Axis-P 560-2D/2.2/6/30/PAG	2.2	2880	6	30	72.8	450	②
			Axis-P 560-2D/3-8/30/AL	Axis-P 560-2D/3-8/30/PAG	3	2880	8	30	82.4	450 (550*)	③
			Axis-P 560-2D/4-8/35/AL	Axis-P 560-2D/4-8/35/PAG	4	2880	8	35	92.5	550	④
			Axis-P 560-2D/5.5-8/40/AL	Axis-P 560-2D/5.5-8/40/PAG	5.5	2880	8	40	113.9	550	⑤
			Axis-P 560-2D/7.5-8/45/AL	Axis-P 560-2D/7.5-8/45/PAG	7.5	2880	8	45	117.9	550 (650*)	⑥

* Including a motor with energy efficiency IE3

Aerodynamic characteristics

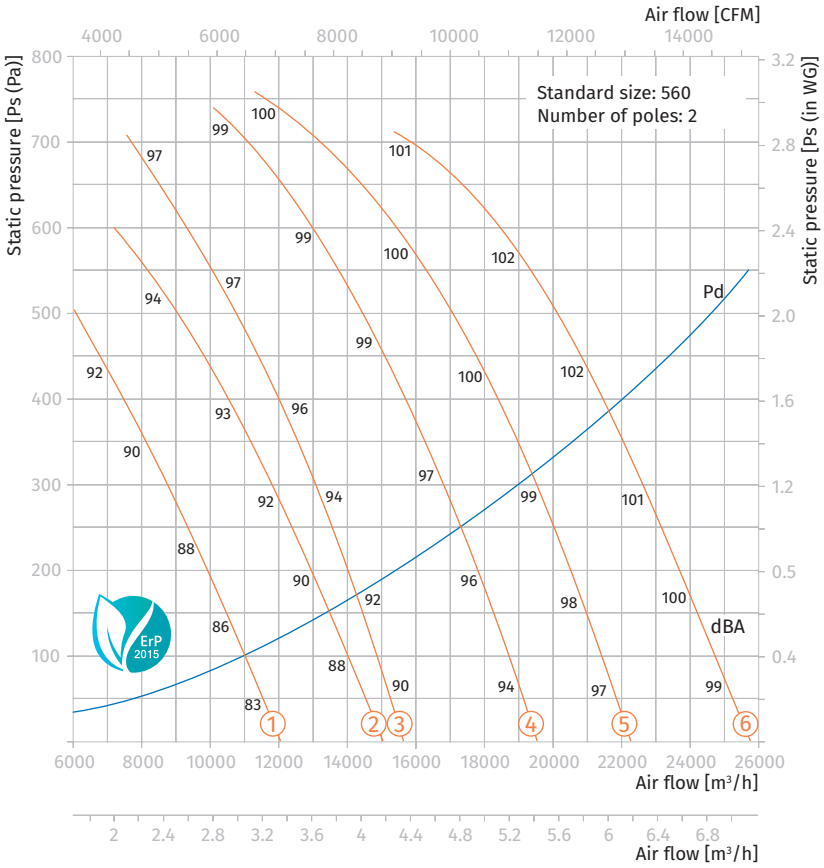

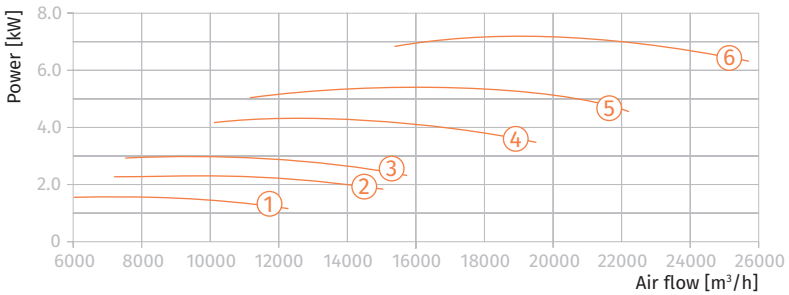

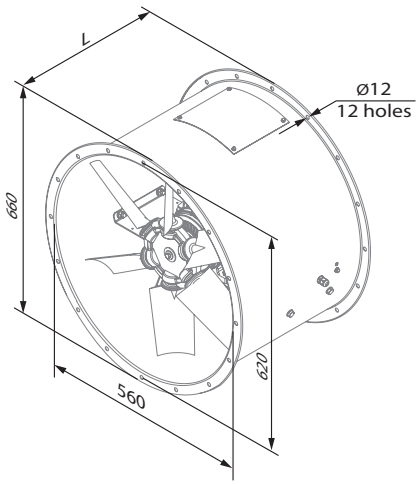

Axis-P 560-2

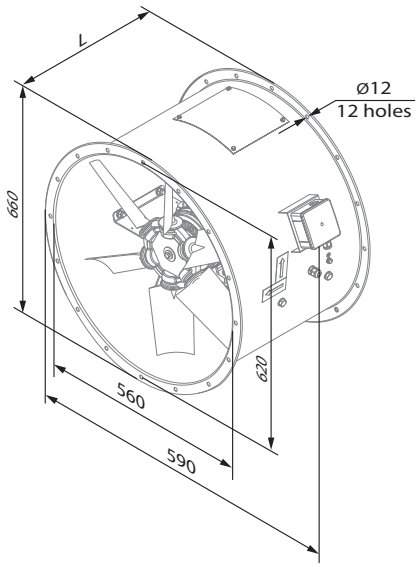

Axis-P 560-2 ...-K

Technical data

AXIS-P 630-4

Size	Number of poles	Voltage [V / 50 Hz]	Fan model with aluminum blades impeller (AL)	Fans model with fiberglass reinforced polyamide blades impeller (PAG)	Installed motor power Ny [kW]	RPM [min⁻¹]	Number of blades	Blade setting angle [°]	Weight [kg]	Lenght L [mm]	Curve number on graph
630	4	3~400	-	Axis-P 630-4D/0.37-8/25/PAG	0.37	1440	8	25	67.9	350	①
			Axis-P 630-4D/0.55-8/30/AL	Axis-P 630-4D/0.55-8/30/PAG	0.55	1440	8	30	71	350 (450*)	②
			Axis-P 630-4D/0.75-8/35/AL	Axis-P 630-4D/0.75-8/35/PAG	0.75	1440	8	35	71.8	450	③
			Axis-P 630-4D/1.1-8/40/AL	Axis-P 630-4D/1.1-8/40/PAG	1.1	1440	8	40	77	450	④
			Axis-P 630-4D/1.5-6/32.5/AL	Axis-P 630-4D/1.5-6/32.5/PAG	1.5	1440	6	32.5	81.1	450	⑤
			Axis-P 630-4D/1.5-8/45/AL	Axis-P 630-4D/1.5-8/45/PAG	1.5	1440	8	45	80	450	⑥
			Axis-P 630-4D/1.5-6/37.5/AL	Axis-P 630-4D/1.5-6/37.5/PAG	1.5	1440	6	37.5	81.1	450	⑦
			Axis-P 630-4D/2.2-6/40/AL	Axis-P 630-4D/2.2-6/40/PAG	2.2	1440	6	40	83.2	450 (550*)	⑧
			Axis-P 630-4D/2.2-6/45/AL	Axis-P 630-4D/2.2-6/45/PAG	2.2	1440	6	45	83.2	450 (550*)	⑨

* Including a motor with energy efficiency IE3

Aerodynamic characteristics

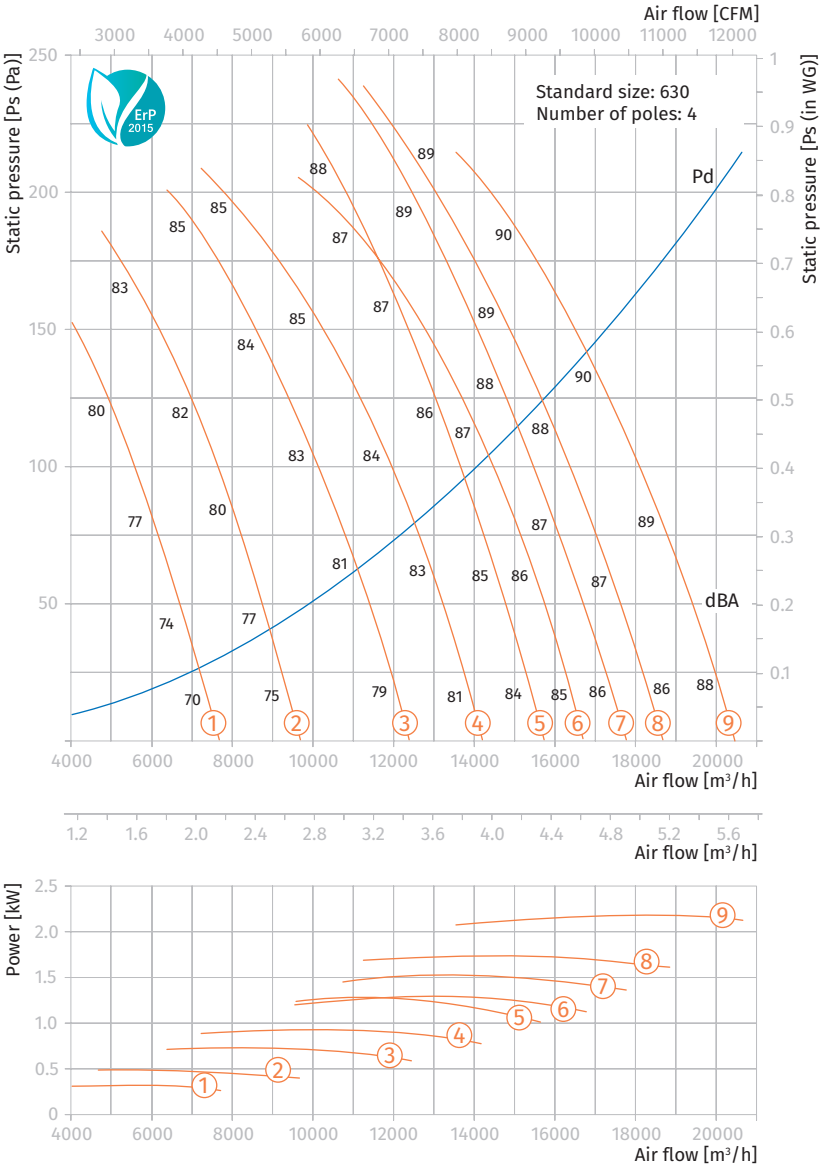

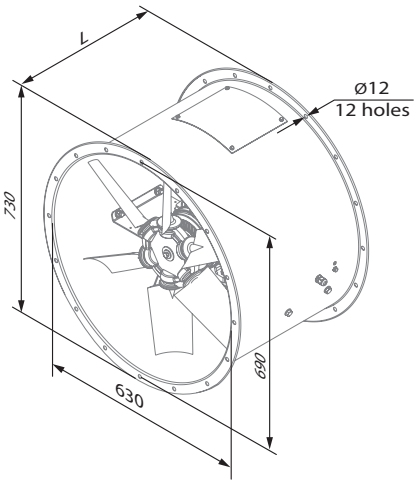

Axis-P 630-4

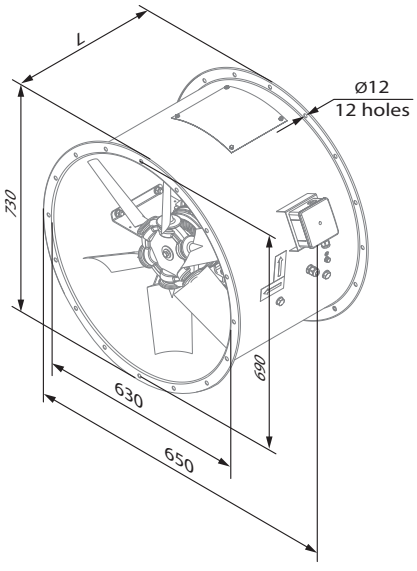

Axis-P 630-4 ...-K

Technical data

AXIS-P 630-2

Size	Number of poles	Voltage [V / 50 Hz]	Fan model with aluminum blades impeller (AL)	Fans model with fiberglass reinforced polyamide blades impeller (PAG)	Installed motor power Ny [kW]	RPM [min⁻¹]	Number of blades	Blade setting angle [°]	Weight [kg]	Lenght L [mm]	Curve number on graph
630	2	3~400	-	Axis-P 630-2D/3-8/25/PAG	3	2880	8	25	88	450 (550*)	①
			Axis-P 630-2D/4-8/30/AL	Axis-P 630-2D/4-8/30/PAG	4	2880	8	30	98.1	550	②
			Axis-P 630-2D/5.5-8/35/AL	Axis-P 630-2D/5.5-8/35/PAG	5.5	2880	8	35	119.5	550	③
			Axis-P 630-2D/7.5-8/40/AL	Axis-P 630-2D/7.5-8/40/PAG	7.5	2880	8	40	123.5	550 (650*)	④
			Axis-P 630-2D/9.2-6/30/AL	Axis-P 630-2D/9.2-6/30/PAG	9.2	2880	6	30	130.1	650	⑤
			Axis-P 630-2D/11-6/32.5/AL	Axis-P 630-2D/11-6/32.5/PAG	11	2880	6	32.5	154.1	650 (750*)	⑥
			Axis-P 630-2D/11-6/35/AL	Axis-P 630-2D/11-6/35/PAG	11	2880	6	35	154.1	650 (750*)	⑦
			Axis-P 630-2D/15-6/37.5/AL	Axis-P 630-2D/15-6/37.5/PAG	15	2880	6	37.5	166.7	750	⑧
			Axis-P 630-2D/15-6/40/AL	Axis-P 630-2D/15-6/40/PAG	15	2880	6	40	166.7	750	⑨
			Axis-P 630-2D/18.5-6/45/AL	Axis-P 630-2D/18.5-6/45/PAG	18.5	2880	6	45	179.8	750	⑩

* Including a motor with energy efficiency IE3

Aerodynamic characteristics

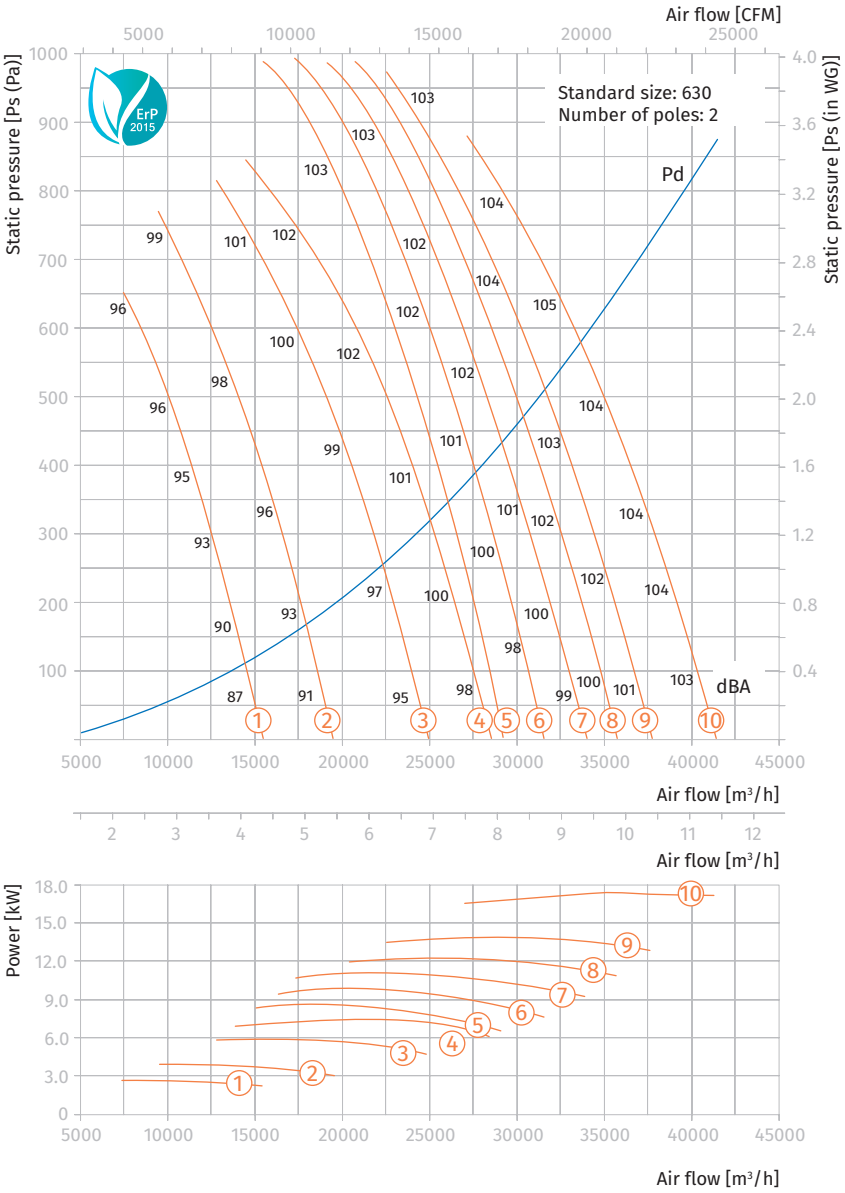

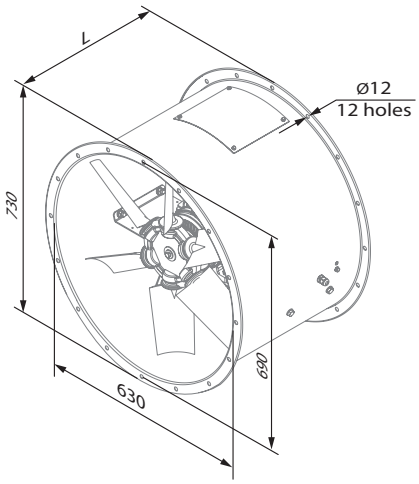

Axis-P 630-2

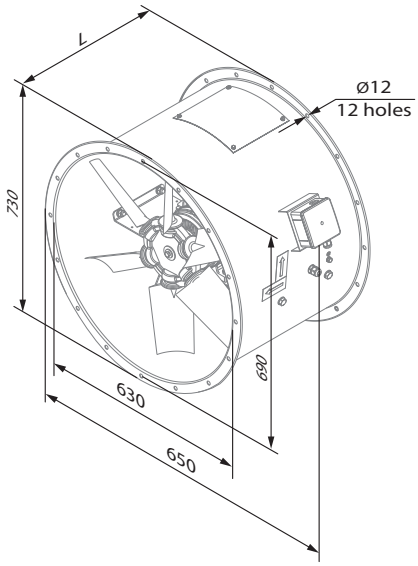

Axis-P 630-2 ...-K

Technical data

AXIS-P 710-4

Size	Number of poles	Voltage [V / 50 Hz]	Fan model with aluminum blades impeller (AL)	Fans model with fiberglass reinforced polyamide blades impeller (PAG)	Installed motor power Ny [kW]	RPM [min⁻¹]	Number of blades	Blade setting angle [°]	Weight [kg]	Lenght L [mm]	Curve number on graph
710	4	3~400	Axis-P 710-4D/0.75-6/20/AL	Axis-P 710-4D/0.75-6/20/PAG	0.75	1440	6	20	99.1	450	①
			Axis-P 710-4D/1.1-6/25/AL	Axis-P 710-4D/1.1-6/25/PAG	1.1	1440	6	25	104.3	450	②
			Axis-P 710-4D/1.5-6/30/AL	Axis-P 710-4D/1.5-6/30/PAG	1.5	1440	6	30	107.3	450	③
			Axis-P 710-4D/2.2-6/32.5/AL	Axis-P 710-4D/2.2-6/32.5/PAG	2.2	1440	6	32.5	109.4	450 (550*)	④
			Axis-P 710-4D/2.2-6/35/AL	Axis-P 710-4D/2.2-6/35/PAG	2.2	1440	6	35	109.4	450 (550*)	⑤
			Axis-P 710-4D/2.2-6/37.5/AL	Axis-P 710-4D/2.2-6/37.5/PAG	2.2	1440	6	37.5	109.4	450 (550*)	⑥
			Axis-P 710-4D/3-6/40/AL	Axis-P 710-4D/3-6/40/PAG	3	1440	6	40	118.3	550	⑦
			Axis-P 710-4D/4-6/45/AL	Axis-P 710-4D/4-6/45/PAG	4	1440	6	45	129.4	550	⑧

* Including a motor with energy efficiency IE3

Aerodynamic characteristics

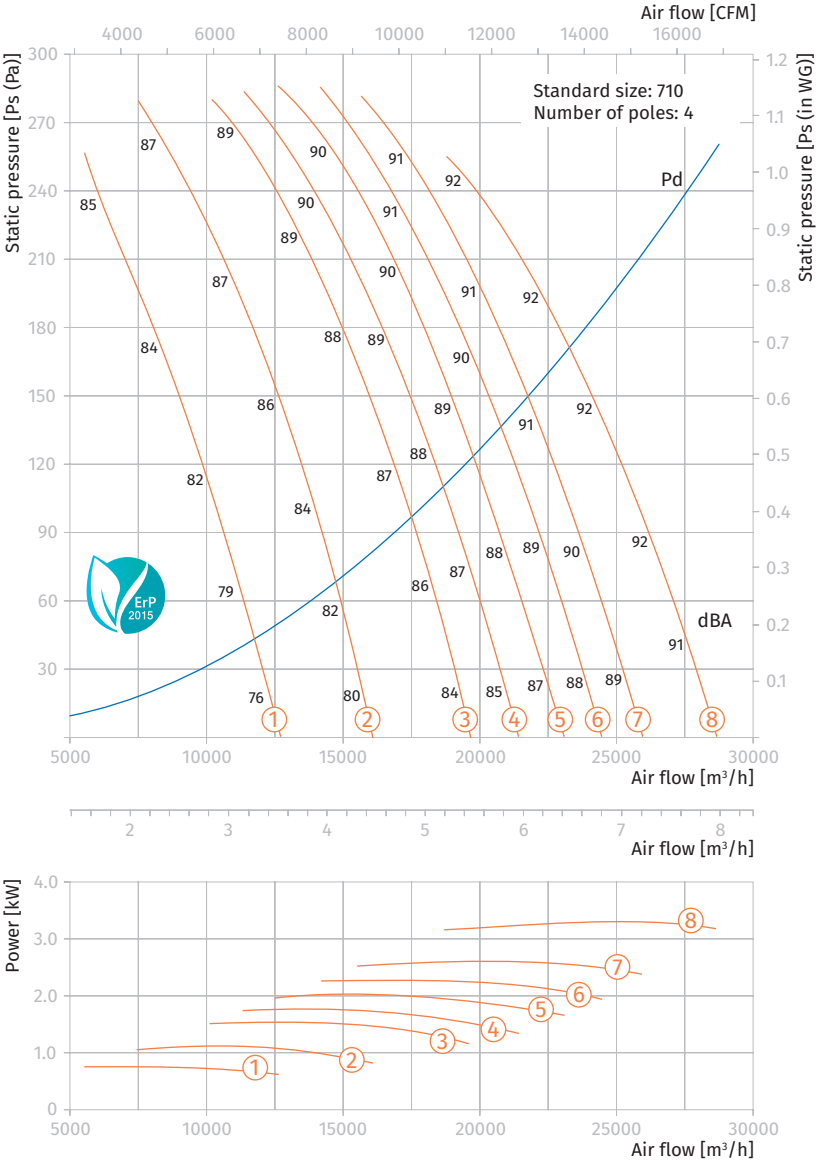

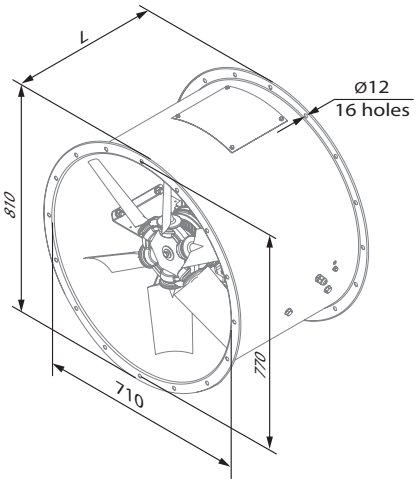

Axis-P 710-4

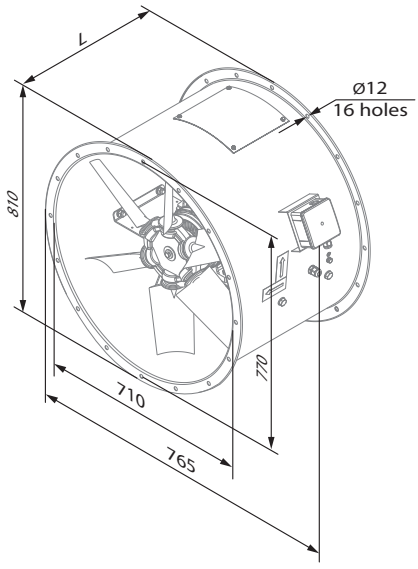

Axis-P 710-4...-K

AXIS-P 710

Technical data

AXIS-P 710-2

Size	Number of poles	Voltage [V / 50 Hz]	Fan model with aluminum blades impeller (AL)	Fans model with fiberglass reinforced polyamide blades impeller (PAG)	Installed motor power Ny [kW]	RPM [min⁻¹]	Number of blades	Blade setting angle [°]	Weight [kg]	Lenght L [mm]	Curve number on graph
710	2	3~400	Axis-P 710-2D/7.5-6/20/AL	Axis-P 710-2D/7.5-6/20/PAG	7.5	2880	6	20	150.8	550 (650*)	①
			Axis-P 710-2D/9.2-6/25/AL	Axis-P 710-2D/9.2-6/25/PAG	9.2	2880	6	25	156.3	650	②
			Axis-P 710-2D/15-6/30/AL	Axis-P 710-2D/15-6/30/PAG	15	2880	6	30	192.9	750	③
			Axis-P 710-2D/15-6/32.5/AL	Axis-P 710-2D/15-6/32.5/PAG	15	2880	6	32.5	192.9	750	④
			Axis-P 710-2D/18.5-6/35/AL	Axis-P 710-2D/18.5-6/35/PAG	18.5	2880	6	35	206	750	⑤
			Axis-P 710-2D/18.5-6/37.5/AL	Axis-P 710-2D/18.5-6/37.5/PAG	18.5	2880	6	37.5	206	750	⑥
			Axis-P 710-2D/22-6/40/AL	Axis-P 710-2D/22-6/40/PAG	22	2880	6	40	246	850	⑦

* Including a motor with energy efficiency IE3

Aerodynamic characteristics

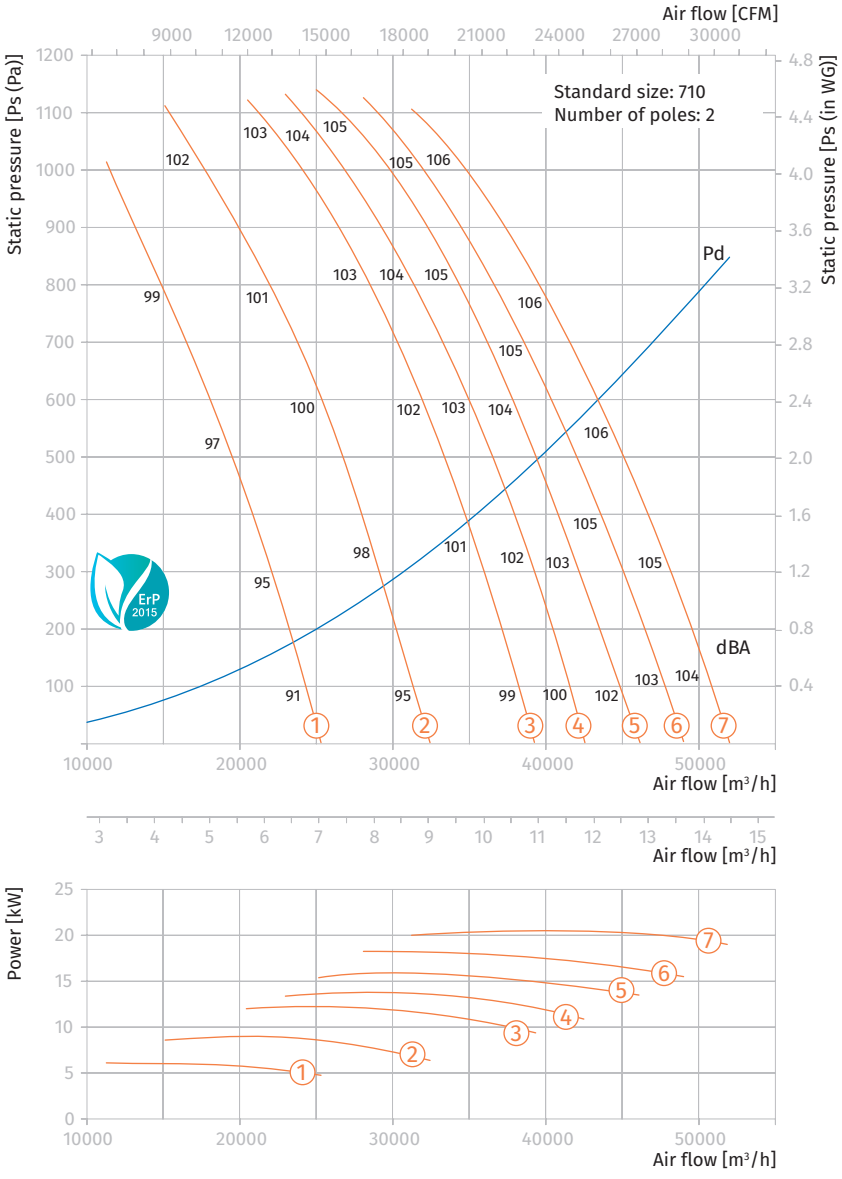

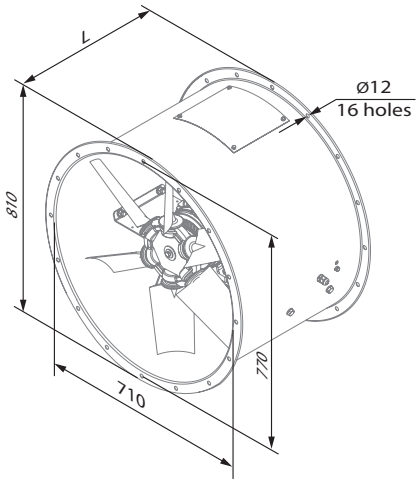

Axis-P 710-2

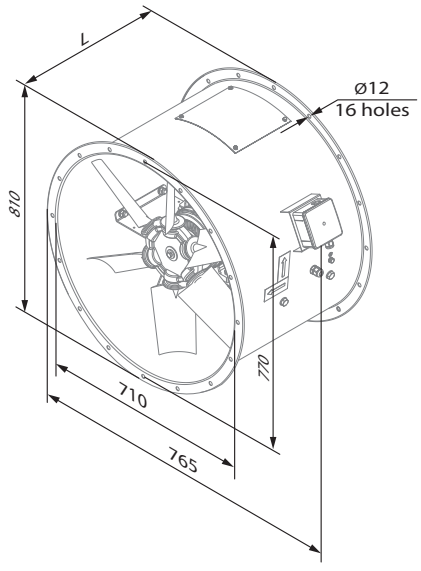

Axis-P 710-2...-K

Technical data

AXIS-P 800-6

Size	Number of poles	Voltage [V / 50 Hz]	Fan model with aluminum blades impeller (AL)	Fans model with fiberglass reinforced polyamide blades impeller (PAG)	Installed motor power Ny [kW]	RPM [min⁻¹]	Number of blades	Blade setting angle [°]	Weight [kg]	Lenght L [mm]	Curve number on graph
800	6	3~400	Axis-P 800-6D/0.37-6/20/AL	Axis-P 800-6D/0.37-6/20/PAG	0.37	960	6	20	109.6	450	①
			Axis-P 800-6D/0.55-6/25/AL	Axis-P 800-6D/0.55-6/25/PAG	0.55	960	6	25	111.1	450	②
			Axis-P 800-6D/0.75-6/30/AL	Axis-P 800-6D/0.75-6/30/PAG	0.75	960	6	30	116.4	450	③
			Axis-P 800-6D/0.75-6/32.5/AL	Axis-P 800-6D/0.75-6/32.5/PAG	0.75	960	6	32.5	116.4	450	④
			Axis-P 800-6D/1.1-6/35/AL	Axis-P 800-6D/1.1-6/35/PAG	1.1	960	6	35	116.5	450	⑤
			Axis-P 800-6D/1.1-6/37.5/AL	Axis-P 800-6D/1.1-6/37.5/PAG	1.1	960	6	37.5	116.5	450	⑥
			Axis-P 800-6D/1.1-6/40/AL	Axis-P 800-6D/1.1-6/40/PAG	1.1	960	6	40	116.5	450	⑦
			Axis-P 800-6D/1.5-6/45/AL	Axis-P 800-6D/1.5-6/45/PAG	1.5	960	6	45	124.6	550	⑧

Aerodynamic characteristics

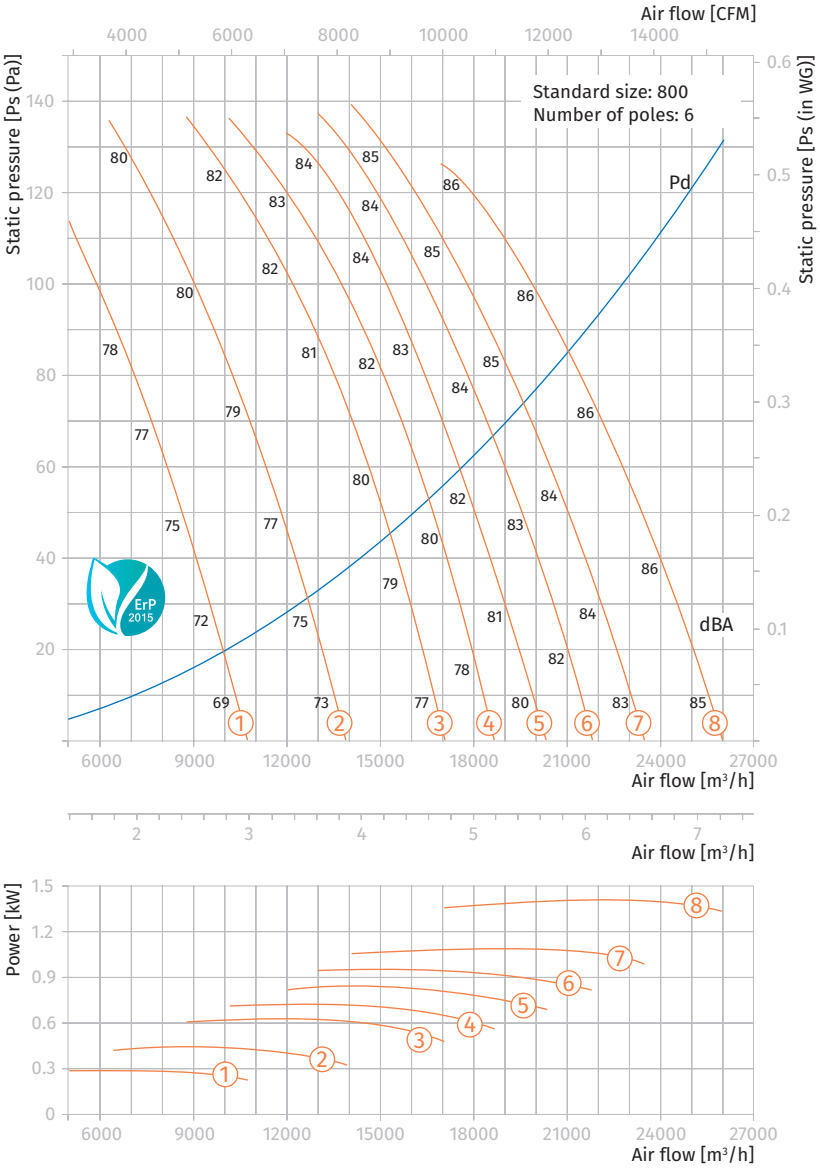

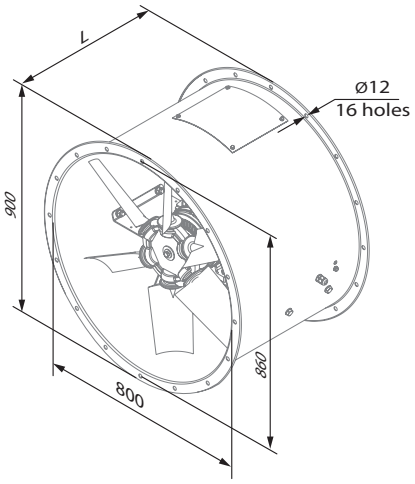

Axis-P 800-6

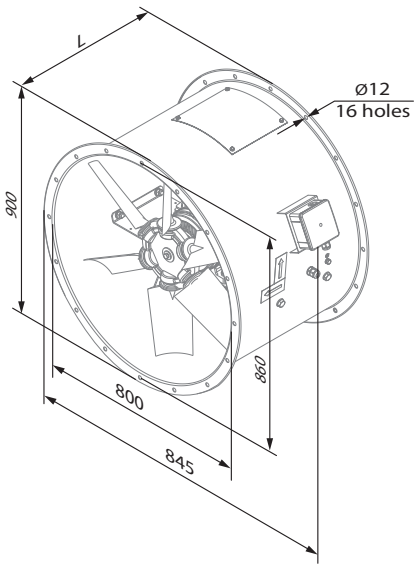

Axis-P 800-6 ...-K

AXIS-P 800

Technical data

AXIS-P 800-4

Size	Number of poles	Voltage [V / 50 Hz]	Fan model with aluminum blades impeller (AL)	Fans model with fiberglass reinforced polyamide blades impeller (PAG)	Installed motor power Ny [kW]	RPM [min⁻¹]	Number of blades	Blade setting angle [°]	Weight [kg]	Lenght L [mm]	Curve number on graph
800	4	3~400	Axis-P 800-4D/1.1-6/20/AL	Axis-P 800-4D/1.1-6/20/PAG	1.1	1440	6	20	115.6	450	①
			Axis-P 800-4D/1.5-6/25/AL	Axis-P 800-4D/1.5-6/25/PAG	1.5	1440	6	25	118.6	450	②
			Axis-P 800-4D/2.2-6/30/AL	Axis-P 800-4D/2.2-6/30/PAG	2.2	1440	6	30	120.7	450/(550*)	③
			Axis-P 800-4D/3-6/32.5/AL	Axis-P 800-4D/3-6/32.5/PAG	3	1440	6	32.5	129.6	550	④
			Axis-P 800-4D/3-6/35/AL	Axis-P 800-4D/3-6/35/PAG	3	1440	6	35	129.6	550	⑤
			Axis-P 800-4D/4-6/37.5/AL	Axis-P 800-4D/4-6/37.5/PAG	4	1440	6	37.5	140.7	550	⑥
			Axis-P 800-4D/4-6/40/AL	Axis-P 800-4D/4-6/40/PAG	4	1440	6	40	140.7	550	⑦
			Axis-P 800-4D/5.5-6/45/AL	Axis-P 800-4D/5.5-6/45/PAG	5.5	1440	6	45	157.6	550	⑧

* Including a motor with energy efficiency IE3

Aerodynamic characteristics

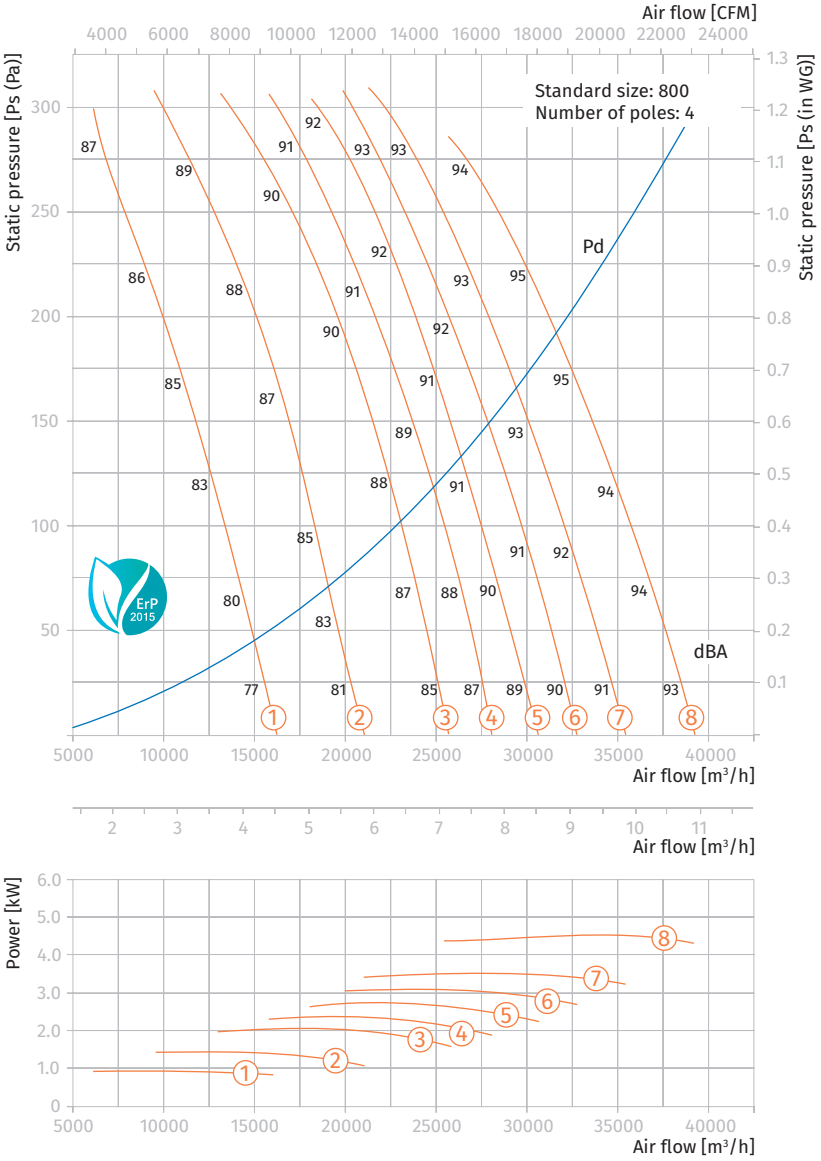

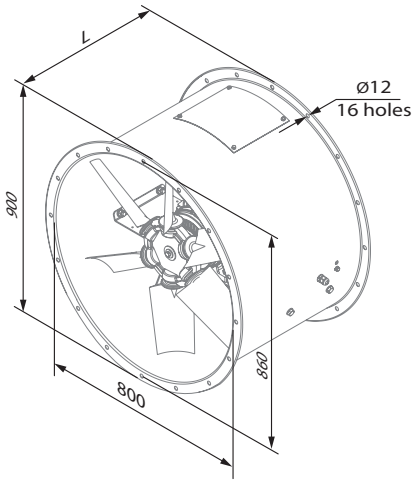

Axis-P 800-4

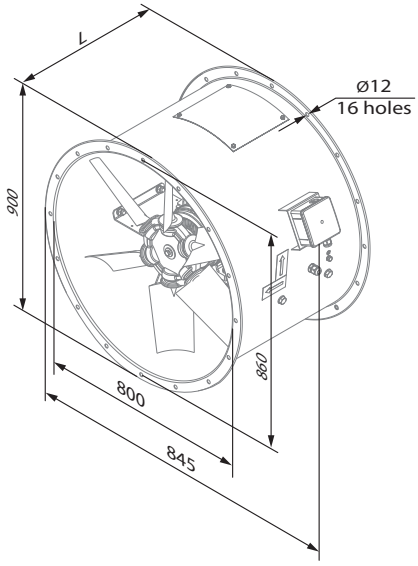

Axis-P 800-4...-K

Technical data

AXIS-P 900-6

Size	Number of poles	Voltage [V / 50 Hz]	Fan model with aluminum blades impeller (AL)	Fans model with fiberglass reinforced polyamide blades impeller (PAG)	Installed motor power Ny [kW]	RPM [min⁻¹]	Number of blades	Blade setting angle [°]	Weight [kg]	Lenght L [mm]	Curve number on graph
900	6	3~400	Axis-P 900-6D/0.75-8/20/AL	Axis-P 900-6D/0.75-8/20/PAG	0.75	960	8	20	121.6	450	①
			Axis-P 900-6D/1.1-8/25/AL	Axis-P 900-6D/1.1-8/25/PAG	1.1	960	8	25	121.7	450	②
			Axis-P 900-6D/1.5-8/30/AL	Axis-P 900-6D/1.5-8/30/PAG	1.5	960	8	30	129.8	550	③
			Axis-P 900-6D/1.5-8/32.5/AL	Axis-P 900-6D/1.5-8/32.5/PAG	1.5	960	8	32.5	129.8	550	④
			Axis-P 900-6D/2.2-8/35/AL	Axis-P 900-6D/2.2-8/35/PAG	2.2	960	8	35	135.3	550	⑤
			Axis-P 900-6D/2.2-8/37.5/AL	Axis-P 900-6D/2.2-8/37.5/PAG	2.2	960	8	37.5	135.3	550	⑥
			Axis-P 900-6D/2.2-8/40/AL	Axis-P 900-6D/2.2-8/40/PAG	2.2	960	8	40	135.3	550	⑦
			Axis-P 900-6D/3-8/45/AL	Axis-P 900-6D/3-8/45/PAG	3	960	8	45	155.8	650	⑧

Aerodynamic characteristics

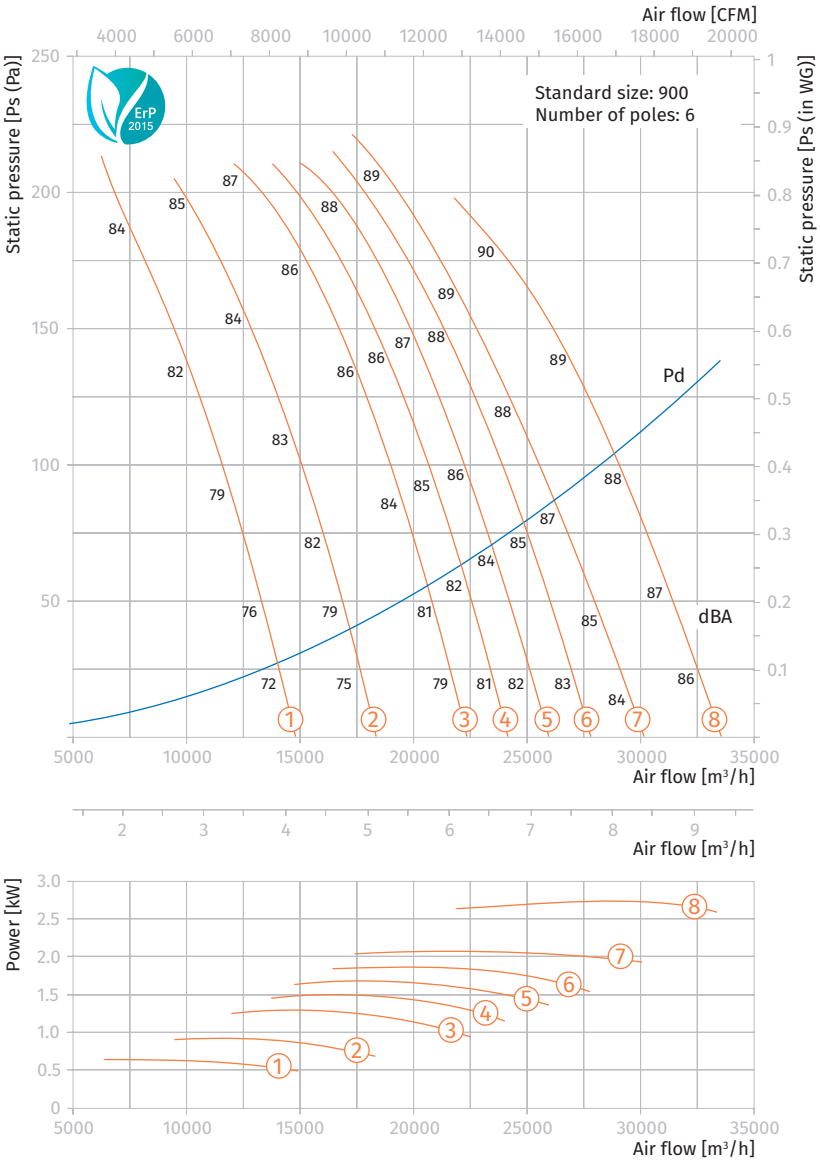

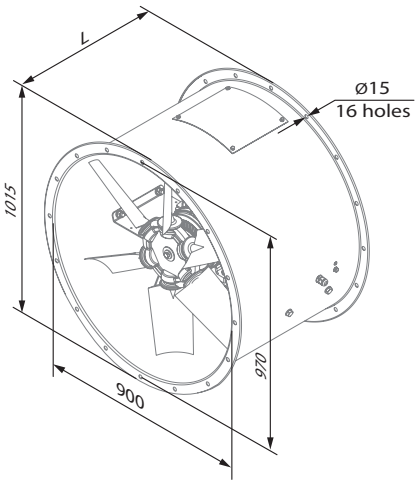

Axis-P 900-6

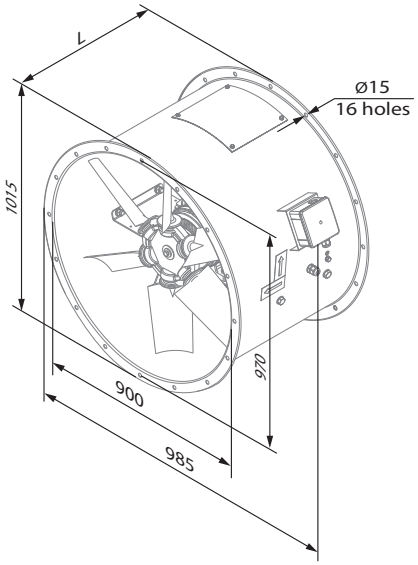

Axis-P 900-6...-K

Technical data

AXIS-P 900-4

Size	Number of poles	Voltage [V / 50 Hz]	Fan model with aluminum blades impeller (AL)	Fans model with fiberglass reinforced polyamide blades impeller (PAG)	Installed motor power Ny [kW]	RPM [min⁻¹]	Number of blades	Blade setting angle [°]	Weight [kg]	Lenght L [mm]	Curve number on graph
900	4	3~400	Axis-P 900-4D/3-8/20/AL	Axis-P 900-4D/3-8/20/PAG	3	1440	8	20	134.8	550	①
			Axis-P 900-4D/4-8/25/AL	Axis-P 900-4D/4-8/25/PAG	4	1440	8	25	145.9	550	②
			Axis-P 900-4D/5.5-8/30/AL	Axis-P 900-4D/5.5-8/30/PAG	5.5	1440	8	30	162.8	550	③
			Axis-P 900-4D/5.5-8/32.5/AL	Axis-P 900-4D/5.5-8/32.5/PAG	5.5	1440	8	32.5	162.8	550	④
			Axis-P 900-4D/7.5-8/35/AL	Axis-P 900-4D/7.5-8/35/PAG	7.5	1440	8	35	165.3	650	⑤
			Axis-P 900-4D/7.5-8/37.5/AL	Axis-P 900-4D/7.5-8/37.5/PAG	7.5	1440	8	37.5	165.3	650	⑥
			Axis-P 900-4D/7.5-8/40/AL	Axis-P 900-4D/7.5-8/40/PAG	7.5	1440	8	40	165.3	650	⑦
			Axis-P 900-4D/11-8/45/AL	Axis-P 900-4D/11-8/45/PAG	11	1440	8	45	199.6	750	⑧

Aerodynamic characteristics

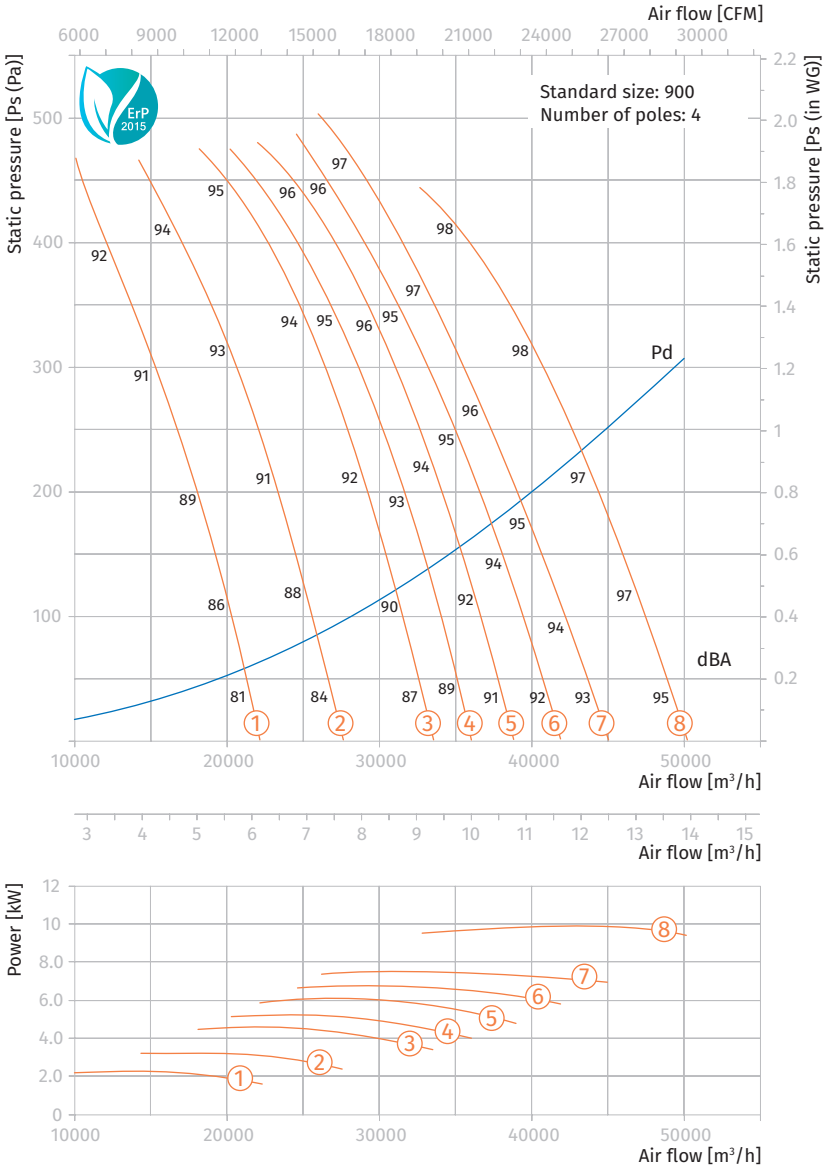

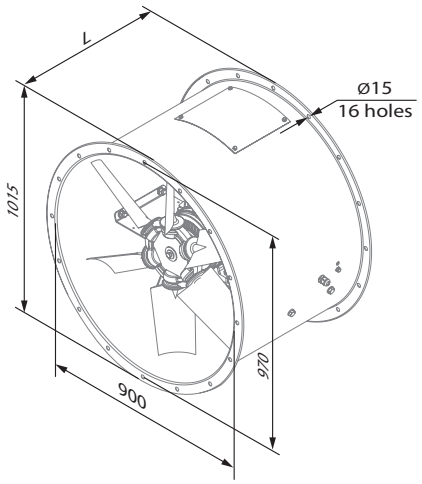

Axis-P 900-4

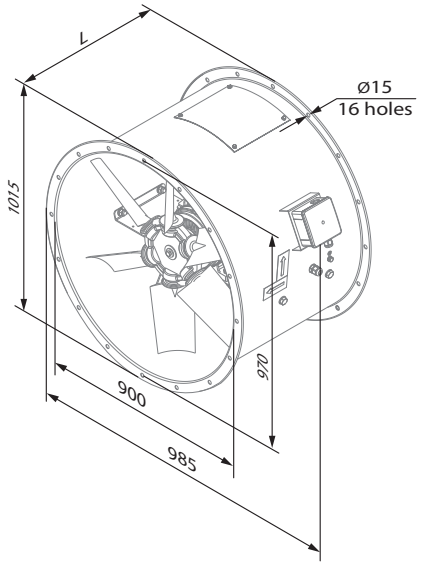

Axis-P 900-4...-K

Technical data

AXIS-P 1000-6

Size	Number of poles	Voltage [V / 50 Hz]	Fan model with aluminum blades impeller (AL)	Fans model with fiberglass reinforced polyamide blades impeller (PAG)	Installed motor power Ny [kW]	RPM [min⁻¹]	Number of blades	Blade setting angle [°]	Weight [kg]	Lenght L [mm]	Curve number on graph
1000	6	3~400	Axis-P 1000-6D/1.5-8/25/AL	Axis-P 1000-6D/1.5-8/25/PAG	1.5	960	8	25	167.5	550	①
			Axis-P 1000-6D/2.2-8/30/AL	Axis-P 1000-6D/2.2-8/30/PAG	2.2	960	8	30	173	550	②
			Axis-P 1000-6D/2.2-8/32.5/AL	Axis-P 1000-6D/2.2-8/32.5/PAG	2.2	960	8	32.5	173	550	③
			Axis-P 1000-6D/3-8/35/AL	Axis-P 1000-6D/3-8/35/PAG	3	960	8	35	193.5	650	④
			Axis-P 1000-6D/3-8/37.5/AL	Axis-P 1000-6D/3-8/37.5/PAG	3	960	8	37.5	193.5	650	⑤
			Axis-P 1000-6D/4-8/40/AL	Axis-P 1000-6D/4-8/40/PAG	4	960	8	40	203.5	650	⑥
			Axis-P 1000-6D/5.5-8/45/AL	Axis-P 1000-6D/5.5-8/45/PAG	5.5	960	8	45	207.5	650	⑦
			Axis-P 1000-6D/5.5-8/50/AL	Axis-P 1000-6D/5.5-8/50/PAG	5.5	960	8	50	207.5	650	⑧

Aerodynamic characteristics

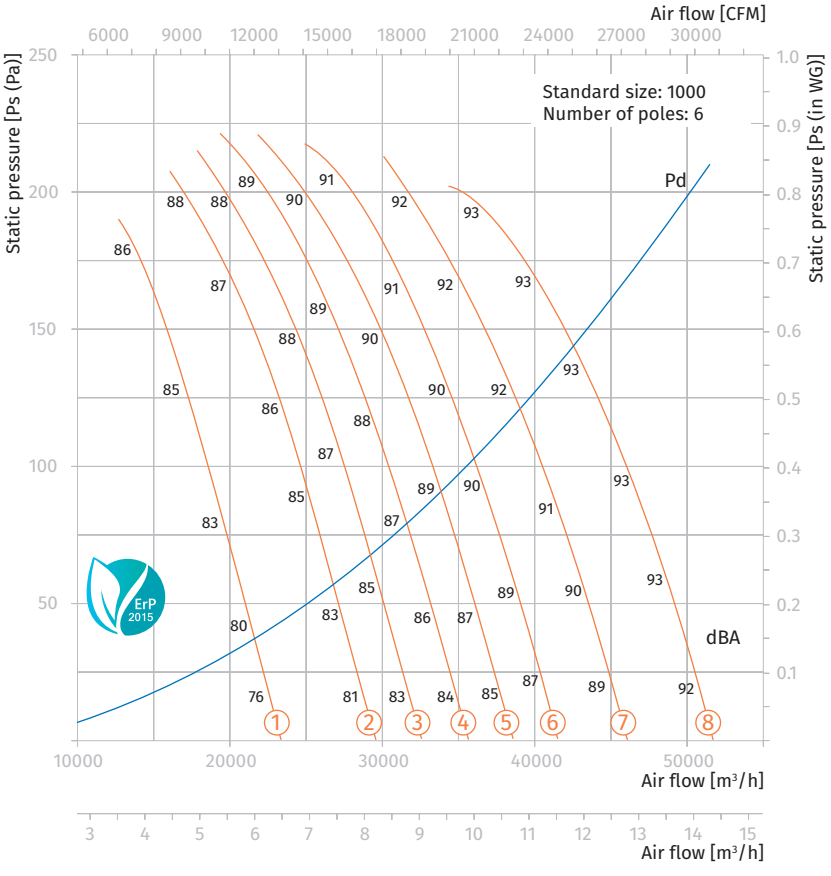

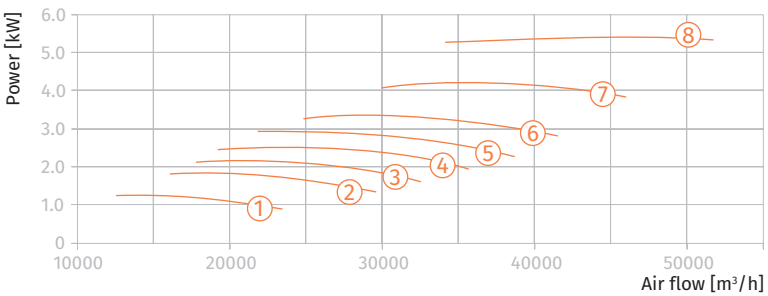

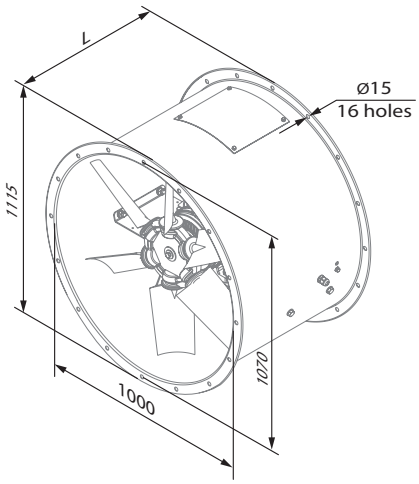

Axis-P 1000-6

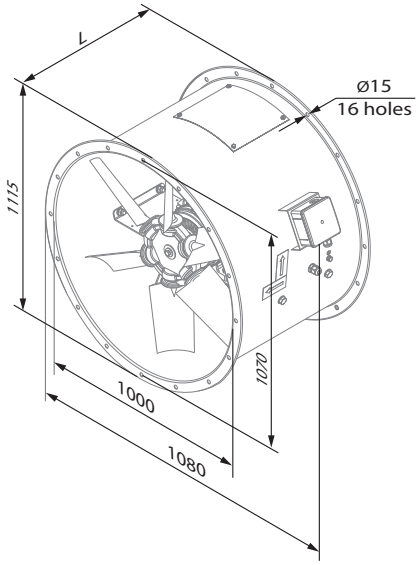

Axis-P 1000-6...-K

Technical data

AXIS-P 1000-4

Size	Number of poles	Voltage [V / 50 Hz]	Fan model with aluminum blades impeller (AL)	Fans model with fiberglass reinforced polyamide blades impeller (PAG)	Installed motor power Ny [kW]	RPM [min⁻¹]	Number of blades	Blade setting angle [°]	Weight [kg]	Lenght L [mm]	Curve number on graph
1000	4	3~400	Axis-P 1000-4D/5.5-8/25/AL	Axis-P 1000-4D/5.5-8/25/PAG	5.5	1440	8	25	200.5	550	①
			Axis-P 1000-4D/7.5-8/30/AL	Axis-P 1000-4D/7.5-8/30/PAG	7.5	1440	8	30	203	650	②
			Axis-P 1000-4D/7.5-8/32.5/AL	Axis-P 1000-4D/7.5-8/32.5/PAG	7.5	1440	8	32.5	203	650	③
			Axis-P 1000-4D/9.2-8/35/AL	Axis-P 1000-4D/9.2-8/35/PAG	9.2	1440	8	35	233.5	650	④
			Axis-P 1000-4D/11-8/37.5/AL	Axis-P 1000-4D/11-8/37.5/PAG	11	1440	8	37.5	237.3	800	⑤
			Axis-P 1000-4D/11-8/40/AL	Axis-P 1000-4D/11-8/40/PAG	11	1440	8	40	237.3	800	⑥
			Axis-P 1000-4D/15-8/45/AL	Axis-P 1000-4D/15-8/45/PAG	15	1440	8	45	256.4	800	⑦
			Axis-P 1000-4D/18.5-8/50/AL	Axis-P 1000-4D/18.5-8/50/PAG	18.5	1440	8	50	301.9	900	⑧

Aerodynamic characteristics

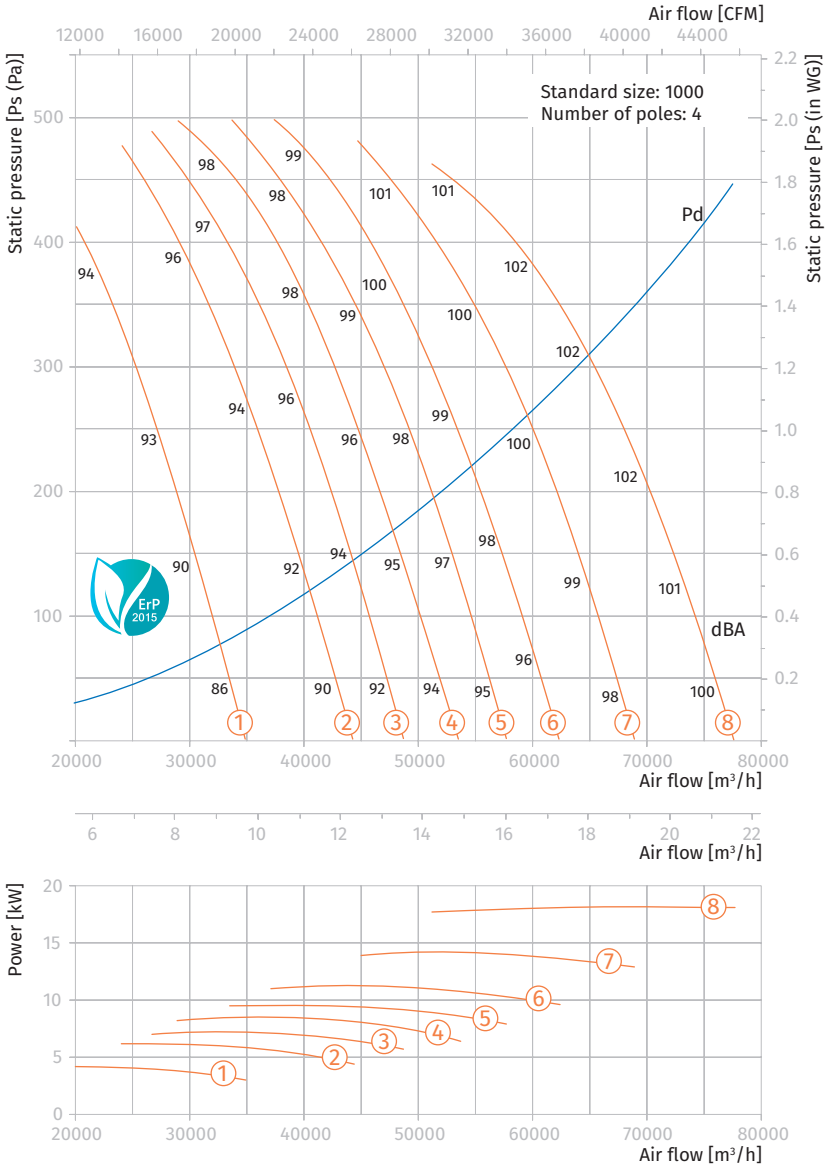

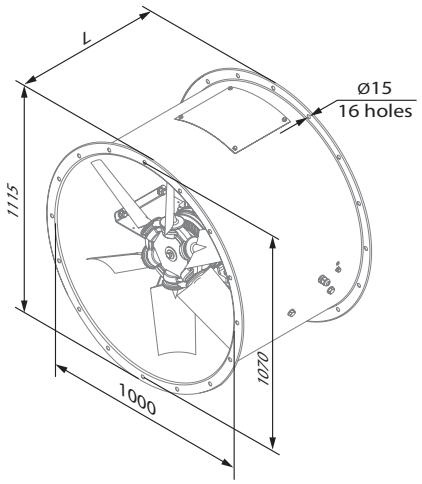

Axis-P 1000-4

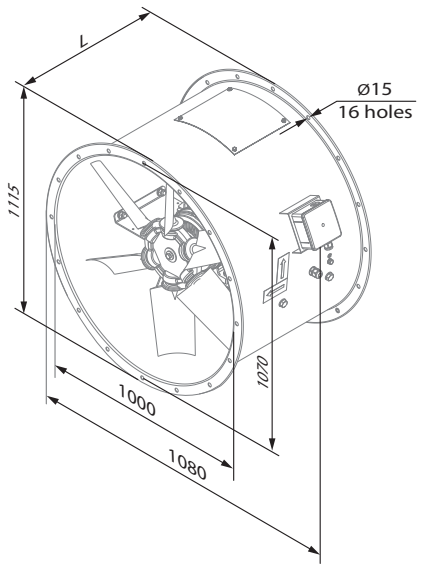

Axis-P 1000-4...-K

Technical data

AXIS-P 1120-6

Size	Number of poles	Voltage [V / 50 Hz]	Fan model with aluminum blades impeller (AL)	Fans model with fiberglass reinforced polyamide blades impeller (PAG)	Installed motor power Ny [kW]	RPM [min⁻¹]	Number of blades	Blade setting angle [°]	Weight [kg]	Lenght L [mm]	Curve number on graph
1120	6	3~400	Axis-P 1120-6D/2.2-8/25/AL	Axis-P 1120-6D/2.2-8/25/PAG	2.2	960	8	25	192	550	①
			Axis-P 1120-6D/3-8/30/AL	Axis-P 1120-6D/3-8/30/PAG	3	960	8	30	212.5	650	②
			Axis-P 1120-6D/4-8/32.5/AL	Axis-P 1120-6D/4-8/32.5/PAG	4	960	8	32.5	222.5	650	③
			Axis-P 1120-6D/4-8/35/AL	Axis-P 1120-6D/4-8/35/PAG	4	960	8	35	222.5	650	④
			Axis-P 1120-6D/5.5-8/37.5/AL	Axis-P 1120-6D/5.5-8/37.5/PAG	5.5	960	8	37.5	226.5	650	⑤
			Axis-P 1120-6D/5.5-8/40/AL	Axis-P 1120-6D/5.5-8/40/PAG	5.5	960	8	40	226.5	650	⑥
			Axis-P 1120-6D/7.5-8/45/AL	Axis-P 1120-6D/7.5-8/45/PAG	7.5	960	8	45	254.8	800	⑦
			Axis-P 1120-6D/9.2-8/50/AL	Axis-P 1120-6D/9.2-8/50/PAG	9.2	960	8	50	272.5	800	⑧

Aerodynamic characteristics

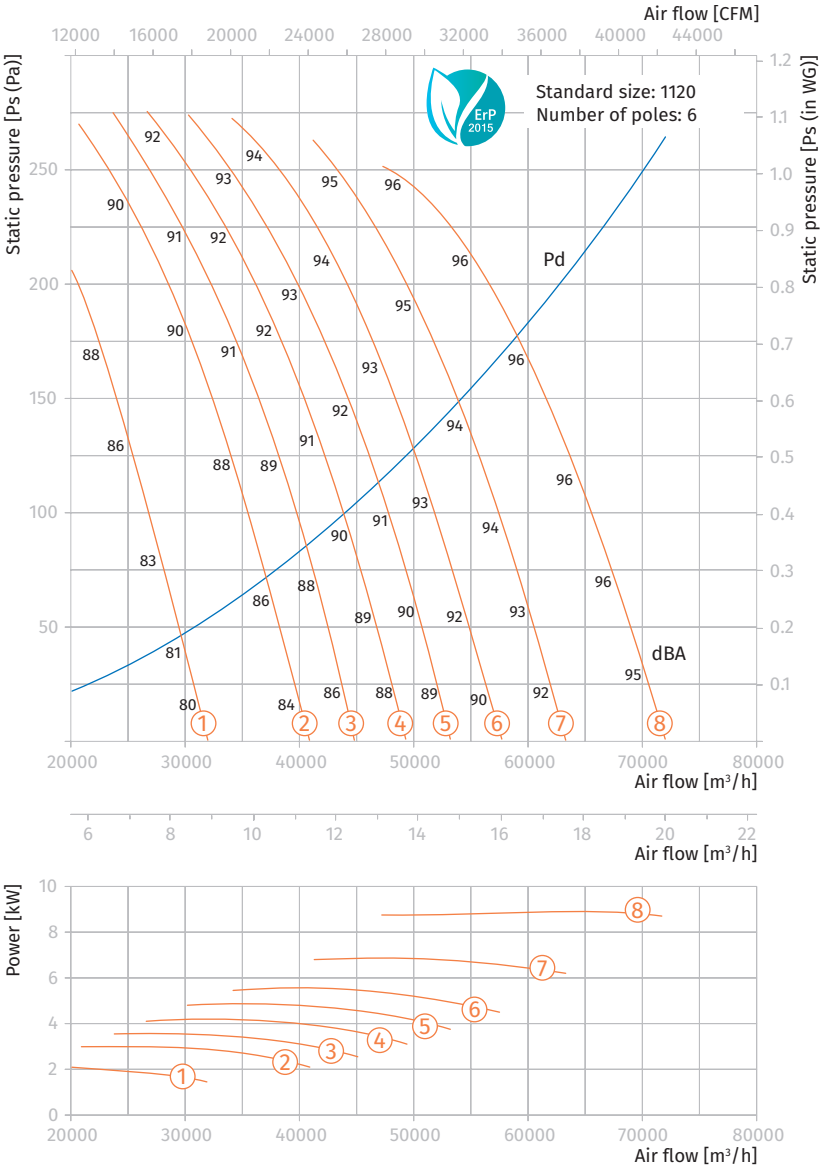

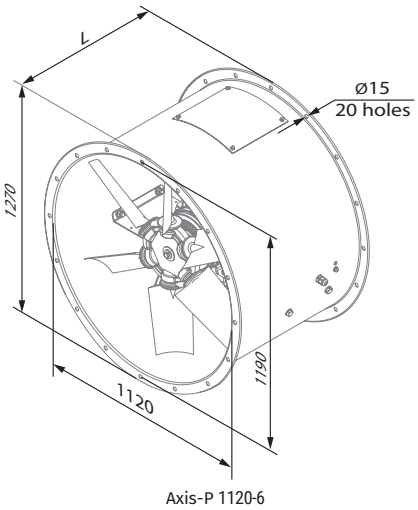

Axis-P 1120-6

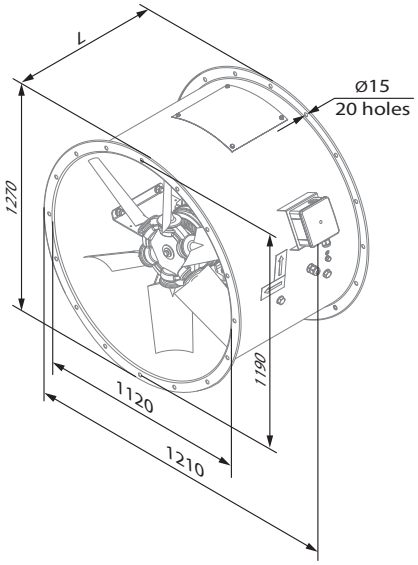

Axis-P 1120-6...-K

AXIS-P 1120

Technical data

AXIS-P 1120-4

Size	Number of poles	Voltage [V / 50 Hz]	Fan model with aluminum blades impeller (AL)	Fans model with fiberglass reinforced polyamide blades impeller (PAG)	Installed motor power Ny [kW]	RPM [min⁻¹]	Number of blades	Blade setting angle [°]	Weight [kg]	Lenght L [mm]	Curve number on graph
1120	4	3~400	Axis-P 1120-4D/7.5-8/25/AL	Axis-P 1120-4D/7.5-8/25/PAG	7.5	1440	8	25	222	650	①
			Axis-P 1120-4D/11-8/30/AL	Axis-P 1120-4D/11-8/30/PAG	11	1440	8	30	256.3	800	②
			Axis-P 1120-4D/11-8/32.5/AL	Axis-P 1120-4D/11-8/32.5/PAG	11	1440	8	32.5	256.3	800	③
			Axis-P 1120-4D/15-8/35/AL	Axis-P 1120-4D/15-8/35/PAG	15	1440	8	35	275.4	800	④
			Axis-P 1120-4D/18.5-8/37.5/AL	Axis-P 1120-4D/18.5-8/37.5/PAG	18.5	1440	8	37.5	320.9	900	⑤
			Axis-P 1120-4D/18.5-8/40/AL	Axis-P 1120-4D/18.5-8/40/PAG	18.5	1440	8	40	320.9	900	⑥
			Axis-P 1120-4D/22-8/45/AL	Axis-P 1120-4D/22-8/45/PAG	22	1440	8	45	334.2	900	⑦

Aerodynamic characteristics

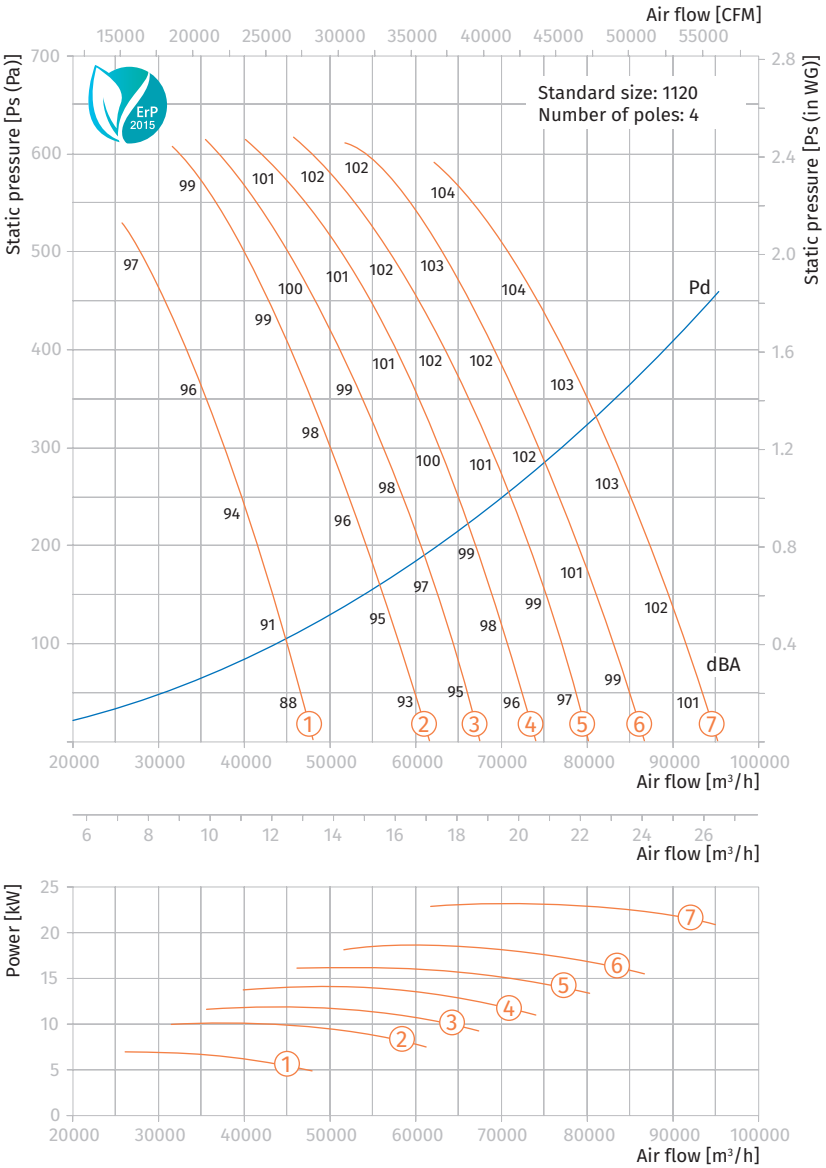

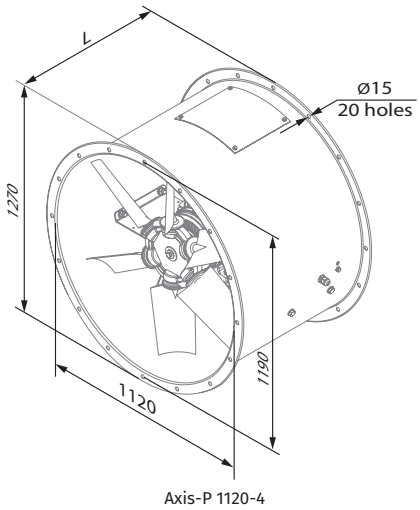

Axis-P 1120-4

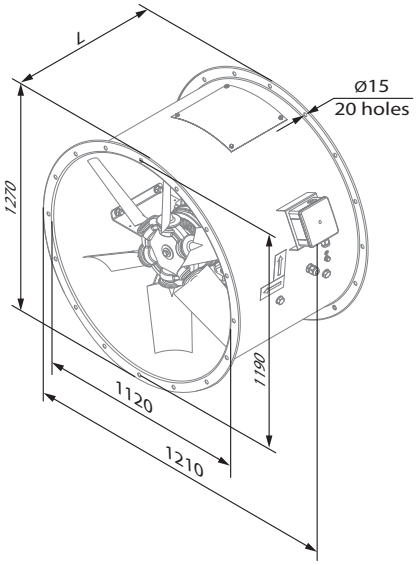

Axis-P 1120-4...-K

Technical data

AXIS-P 1250-6

Size	Number of poles	Voltage [V / 50 Hz]	Fan model with aluminum blades impeller (AL)	Fans model with fiberglass reinforced polyamide blades impeller (PAG)	Installed motor power Ny [kW]	RPM [min⁻¹]	Number of blades	Blade setting angle [°]	Weight [kg]	Lenght L [mm]	Curve number on graph
1250	6	3~400	Axis-P 1250-6D/2.2-8/25/AL	Axis-P 1250-6D/2.2-8/25/PAG	2.2	960	8	25	211	550	①
			Axis-P 1250-6D/3-8/30/AL	Axis-P 1250-6D/3-8/30/PAG	3	960	8	30	231.5	650	②
			Axis-P 1250-6D/4-8/32.5/AL	Axis-P 1250-6D/4-8/32.5/PAG	4	960	8	32.5	241.5	650	③
			Axis-P 1250-6D/5.5-8/35/AL	Axis-P 1250-6D/5.5-8/35/PAG	5.5	960	8	35	245.5	650	④
			Axis-P 1250-6D/5.5-8/37.5/AL	Axis-P 1250-6D/5.5-8/37.5/PAG	5.5	960	8	37.5	245.5	650	⑤
			Axis-P 1250-6D/7.5-8/40/AL	Axis-P 1250-6D/7.5-8/40/PAG	7.5	960	8	40	273.8	800	⑥
			Axis-P 1250-6D/9.2-8/45/AL	Axis-P 1250-6D/9.2-8/45/PAG	9.2	960	8	45	291.5	800	⑦
			Axis-P 1250-6D/11-8/50/AL	Axis-P 1250-6D/11-8/50/PAG	11	960	8	50	299.3	800	⑧

Aerodynamic characteristics

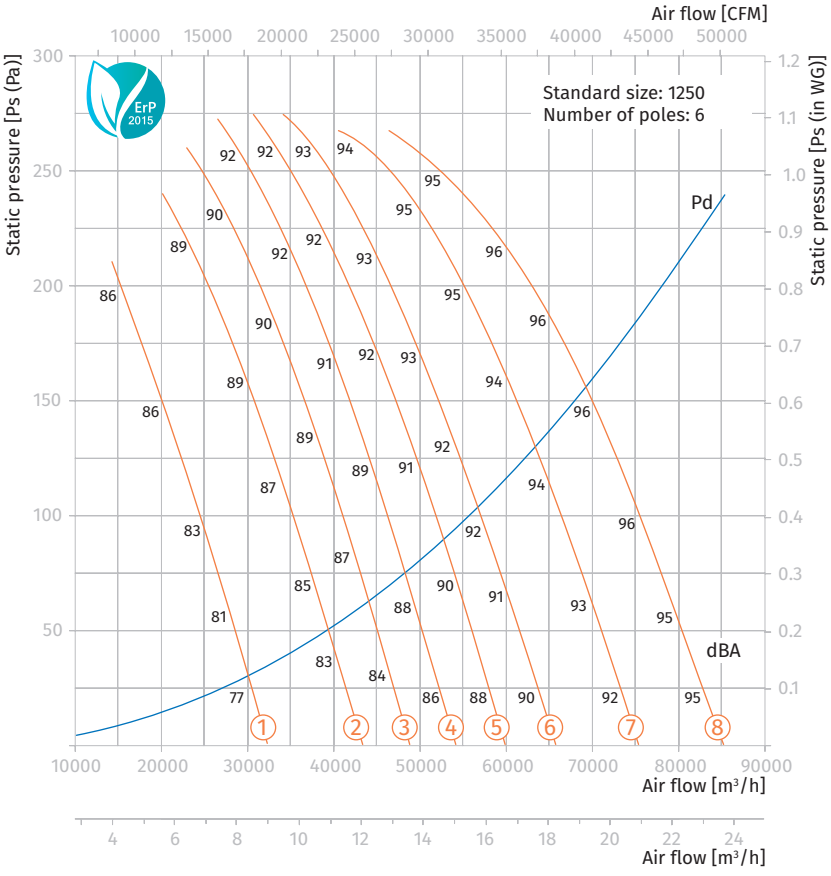

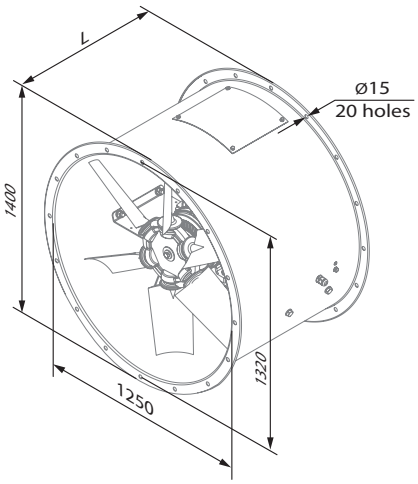

Axis-P 1250-6

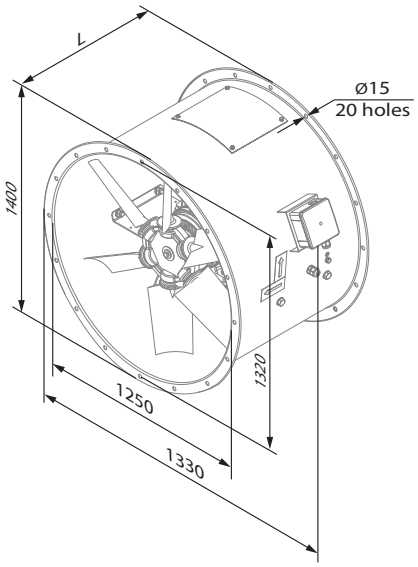

Axis-P 1250-6...-K

AXIS-P 1250

Technical data

AXIS-P 1250-4

Size	Number of poles	Voltage [V / 50 Hz]	Fan model with aluminum blades impeller (AL)	Fans model with fiberglass reinforced polyamide blades impeller (PAG)	Installed motor power Ny [kW]	RPM [min⁻¹]	Number of blades	Blade setting angle [°]	Weight [kg]	Lenght L [mm]	Curve number on graph
1250	4	3~400	Axis-P 1250-4D/7.5-8/25/AL	Axis-P 1250-4D/7.5-8/25/PAG	7.5	1440	8	25	241	650	①
			Axis-P 1250-4D/11-8/30/AL	Axis-P 1250-4D/11-8/30/PAG	11	1440	8	30	275.3	800	②
			Axis-P 1250-4D/15-8/32.5/AL	Axis-P 1250-4D/15-8/32.5/PAG	15	1440	8	32.5	294.4	800	③
			Axis-P 1250-4D/15-8/35/AL	Axis-P 1250-4D/15-8/35/PAG	15	1440	8	35	294.4	800	④
			Axis-P 1250-4D/18.5-8/37.5/AL	Axis-P 1250-4D/18.5-8/37.5/PAG	18.5	1440	8	37.5	339.9	900	⑤
			Axis-P 1250-4D/22-8/40/AL	Axis-P 1250-4D/22-8/40/PAG	22	1440	8	40	353.2	900	⑥
			Axis-P 1250-4D/30-8/45/AL	Axis-P 1250-4D/30-8/45/PAG	30	1440	8	45	416.2	900	⑦

Aerodynamic characteristics

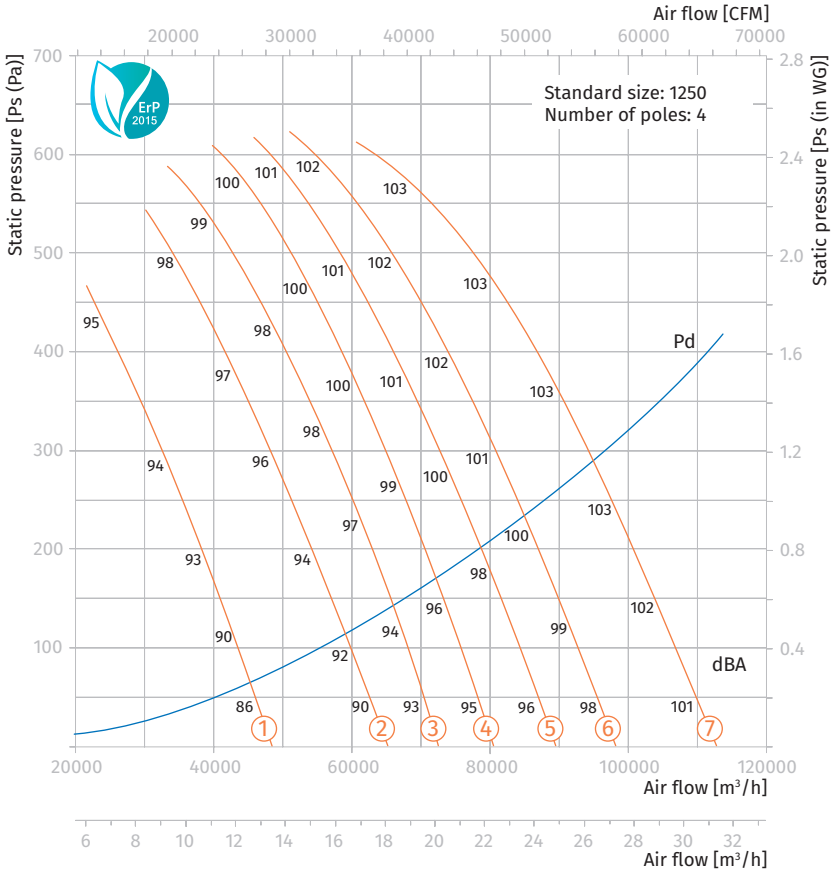

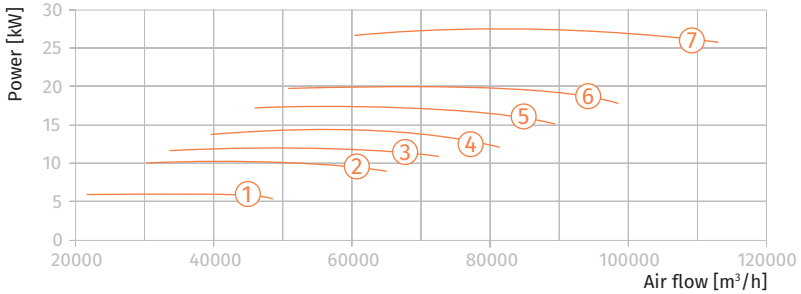

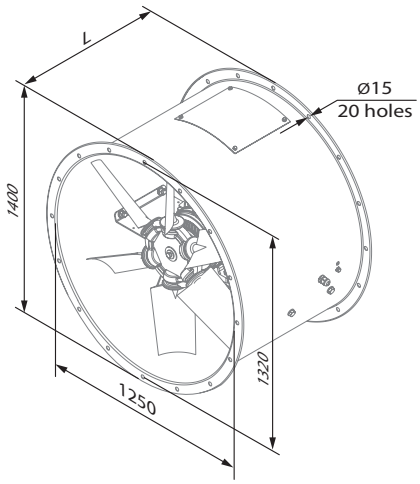

Axis-P 1250-4

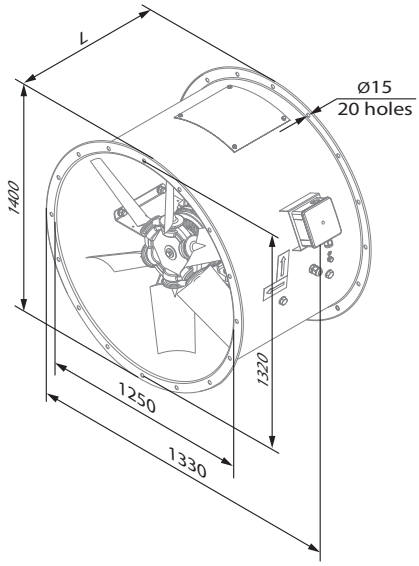

Axis-P 1250-4...-K

Axis-FP

Axial smoke extraction fan

Use

- The fans are used for extraction of smoke in case of fire and removal of hot air outside. The fans are also used for general ventilation systems.
- The fans are rated for permanent operation at ambient air temperatures from -60 °C up to +50 °C (depends on climatic category, see the Designation key). The fans are able to operate 2 hours at the temperatures +200 °C, +300 °C and +400 °C.

Air flow:
up to 108 000 m³/h

Fire resistance rating:
200 °C/2 hours
300 °C/2 hours
400 °C/2 hours

ErP 2015

Design

- The fan consists of the casing, impeller and motor. The metal casing with rolled flanges helps achieve outstanding rigidity and minimum clearances between the casing and the blades. There is an inspection hatch in the casing for easy maintenance.
- All the casing components are powder coated for improved protection against the environmental effects.
- The weight of the fans may differ from the one stated in the catalogue and depends on the components used (motor, terminal box, etc.).

Motor

- The fans are equipped with three-phase (400 V/50 Hz) motors. Depending on the model, the fans have single- or double-speed modifications.
- The single-speed models are equipped with 2-, 4- or 6-pole motors.
- The double-speed models are equipped with 2/4- or 4/8-pole motors.

Impeller

- Depending on the size and the required air capacity the fans are equipped with impellers with 6 or 8 blades angled from 20° to 50° with from 2.5 up to 5° stepping to ensure precise matching of fans with the operating point.
- The specially designed impeller blades ensure high efficiency of the fan while keeping noise well under control.
- The impellers are dynamically balanced. Low weight and low moment of the impeller inertia help reduce the fan start-up time.
- The fan blades are made of cast aluminium.

Mounting

- The fans can be mounted on any flat surface or directly into a ventilation duct. The units are suitable for both horizontal and vertical configurations. Installation in the air duct requires flanges to attach the fan to the ductwork.
- To attach the fan to the floor, a wall or the ceiling use the O-AF carriers (not included as standard, should be purchased separately).
- The fans are suitable for installation on rooftops.

Accessories

Carrier	Flange	Flexible joint	Hood	Roof adapter	Mounting curb	Inlet cone
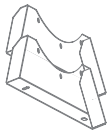	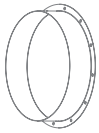	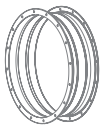	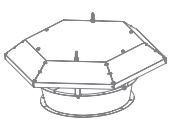	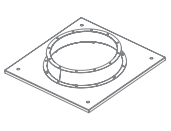	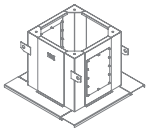	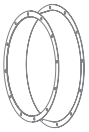
O-AF	F-AF	EVAF-AF...400/2	Z-AF	PK-AF	SM-AF	VK-AF

Designation key

	Casing	Motor		Impeller		Modification		
AXIS-FP	630	K -	2	D / 5.5 -	8	/ 35 / AL -	U	1 - 300/2

Axis-FP: Axial smoke extraction fan

Standard size (dict diameter) [mm]

Modification:
_: standard casing;
K: shortened casing

Number of the motor poles

Motor phase:
E: single-phase;
D: three-phase

Motor power [kW]

Number of the impeller blades [items]

Blade setting angle [°]

Blade material: AL: Aluminium

Climatic category:
U: moderate climate (-40 ... +40 °C)
HL: cold climate (-60 ... +40 °C)
UHL: moderate and cold climate (-60 ... +40 °C)
T: tropical climate (-10 ... +50 °C)
M: maritime moderately cold climate (-40 ... +40 °C)
O: general climatic modification (except maritime climate) (-60 ... +50 °C)
OM: general maritime climatic modification (-40 ... +40 °C)
V: universal climatic modification (-60 ... +50 °C)

Placement category:
1: outdoors
2: under a shed or indoors with the same conditions as outdoors except solar radiation and precipitation
3: in closed rooms without artificial climate control
4: in closed rooms with artificial climate control (ventilation, heating)
5: in rooms with high levels of humidity, without artificial climate control

Fire resistance rating:
200/2: 200 °C, 2 hours
300/2: 300 °C, 2 hours
400/2: 400 °C, 2 hours

Accessories

Backdraft damper	Silencer		Protective mesh	Anti-vibration mount
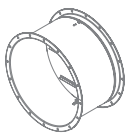	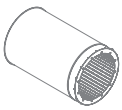	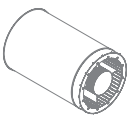	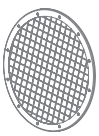	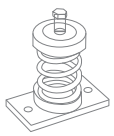
VRV-AF...400/2	SD	SDV	SZ-AF	SIF-AF

Technical data

AXIS-FP 400-4

Size	Number of poles	Voltage [V / 50 Hz]	Model	Installed motor power Ny [kW]	RPM [min⁻¹]	Number of blades	Blade setting angle [°]	Weight [kg]	Lenght L [mm]	Curve number on graph
400	4	3~400	Axis-FP 400-4D/0.55-6/30/AL	0.55	1440	6	30	26.5	400	①
			Axis-FP 400-4D/0.55-6/35/AL	0.55	1440	6	35	26.5	400	②
			Axis-FP 400-4D/0.55-6/40/AL	0.55	1440	6	40	26.5	400	③
			Axis-FP 400-4D/0.55-6/45/AL	0.55	1440	6	45	26.5	400	④
			Axis-FP 400-4D/0.55-8/45/AL	0.55	1440	8	45	27	400	⑤

Aerodynamic characteristics

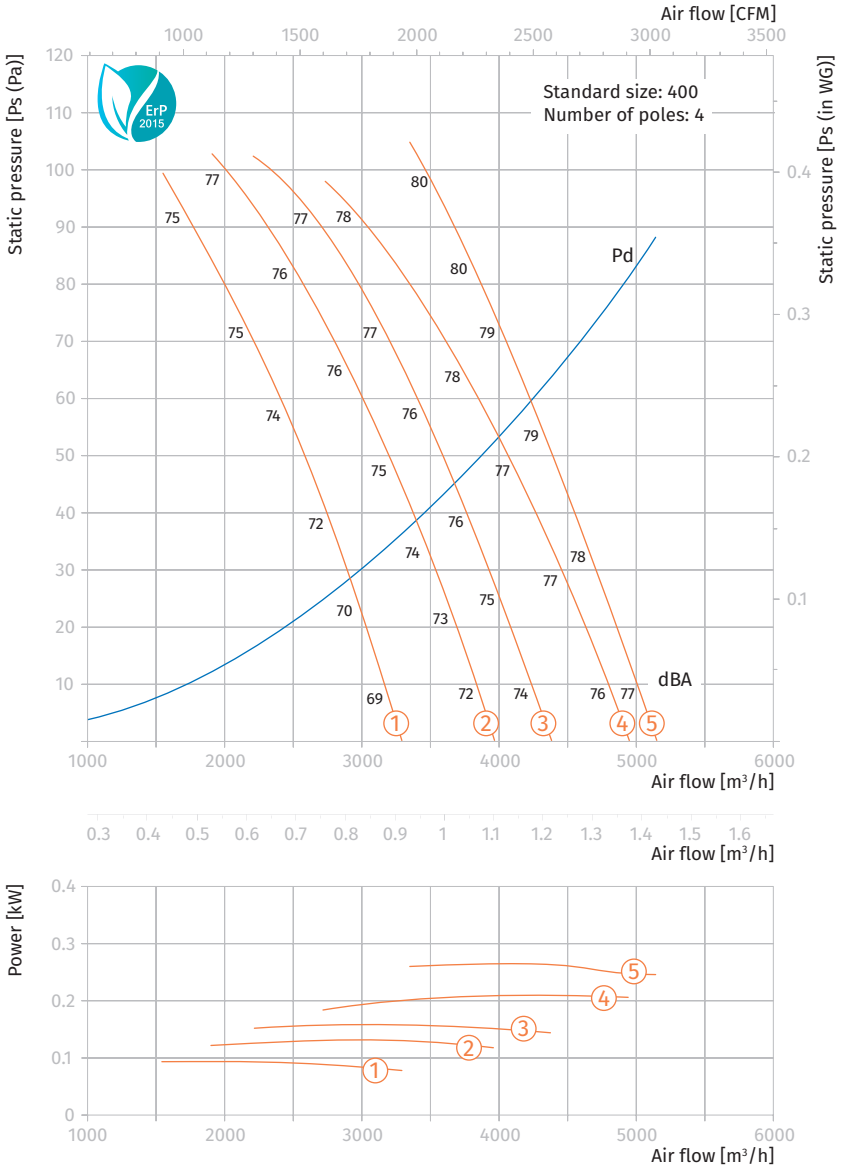

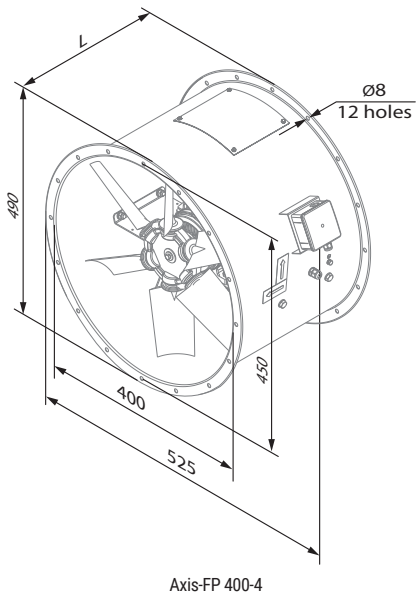

Axis-FP 400-4

AXIS-FP 400

Technical data

AXIS-FP 400-2

Size	Number of poles	Voltage [V / 50 Hz]	Model	Installed motor power Ny [kW]	RPM [min⁻¹]	Number of blades	Blade setting angle [°]	Weight [kg]	Lenght L [mm]	Curve number on graph
400	2	3~400	Axis-FP 400-2D/0.75-6/30/AL	0.75	2880	6	30	26.5	400	①
			Axis-FP 400-2D/1.1-6/35/AL	1.1	2880	6	35	27.5	400	②
			Axis-FP 400-2D/1.5-6/40/AL	1.5	2880	6	40	32.5	400	③
			Axis-FP 400-2D/2.2-6/45/AL	2.2	2880	6	45	34.5	400	④
			Axis-FP 400-2D/2.2-8/45/AL	2.2	2880	8	45	35	400	⑤
400	2/4	3~400	Axis-FP 400-2/4D/0.8/0.2-6/30/AL	0.8/0.2	2880/1440	6	30	26.5	400	①*
			Axis-FP 400-2/4D/1.1/0.25-6/35/AL	1.1/0.25	2880/1440	6	35	27.5	400	②*
			Axis-FP 400-2/4D/1.5/0.37-6/40/AL	1.5/0.37	2880/1440	6	40	32.5	400	③*
			Axis-FP 400-2/4D/2.2/0.5-6/45/AL	2.2/0.5	2880/1440	6	45	34.5	400	④*
			Axis-FP 400-2/4D/2.2/0.5-8/45/AL	2.2/0.5	2880/1440	8	45	35	400	⑤*

* maximum speed graph

Aerodynamic characteristics

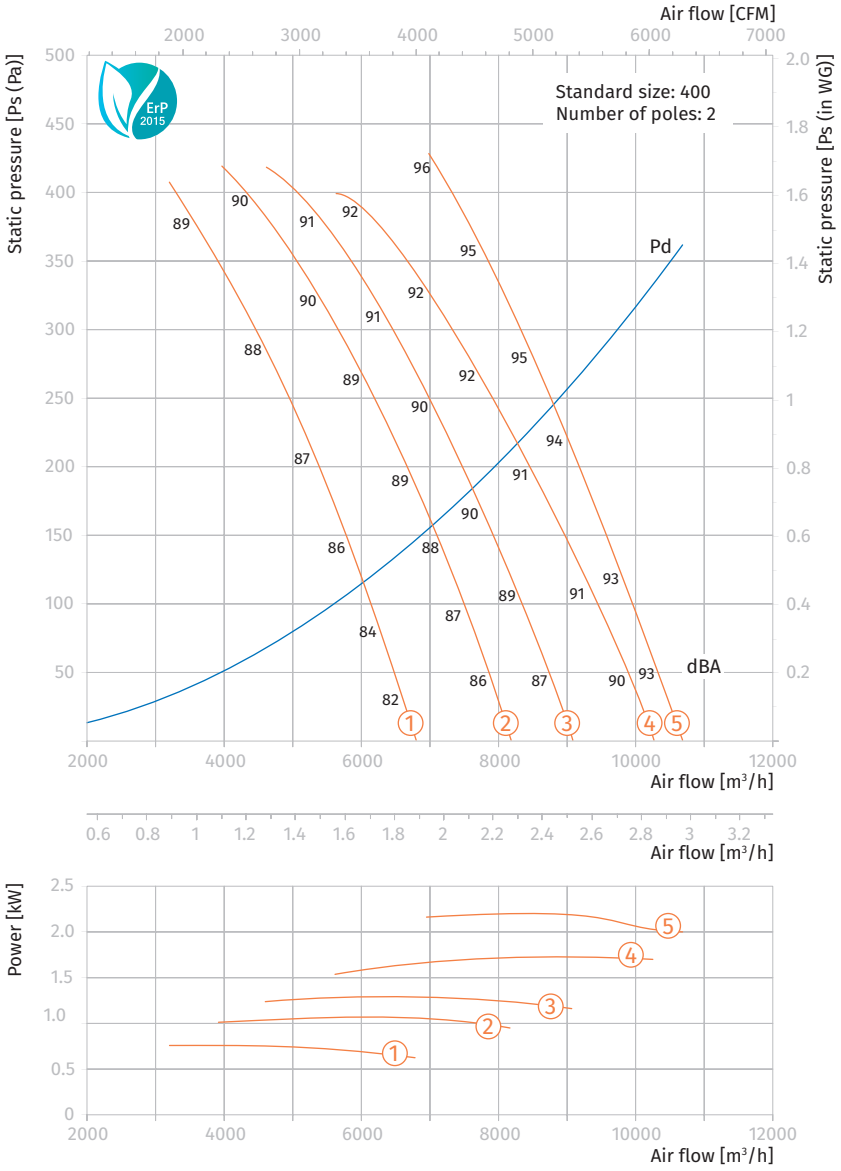

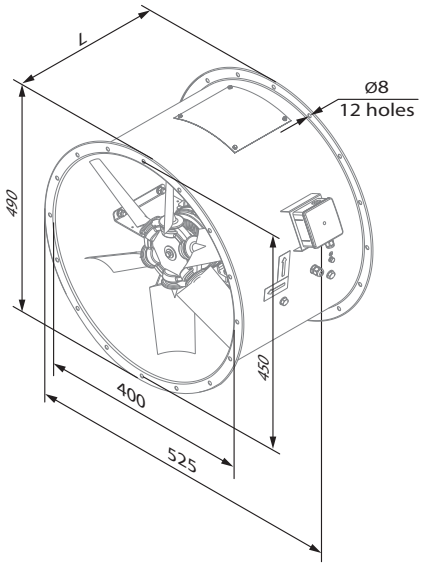

Axis-FP 400-2

Technical data

AXIS-FP 450-4

Size	Number of poles	Voltage [V / 50 Hz]	Model	Installed motor power Ny [kW]	RPM [min⁻¹]	Number of blades	Blade setting angle [°]	Weight [kg]	Lenght L [mm]	Curve number on graph
450	4	3~400	Axis-FP 450-4D/0.55-6/30/AL	0.55	1440	6	30	36.1	400	①
			Axis-FP 450-4D/0.55-6/35/AL	0.55	1440	6	35	36.1	400	②
			Axis-FP 450-4D/0.55-6/40/AL	0.55	1440	6	40	36.1	400	③
			Axis-FP 450-4D/0.55-6/45/AL	0.55	1440	6	45	36.1	400	④
			Axis-FP 450-4D/0.55-8/45/AL	0.55	1440	8	45	36.6	400	⑤

Aerodynamic characteristics

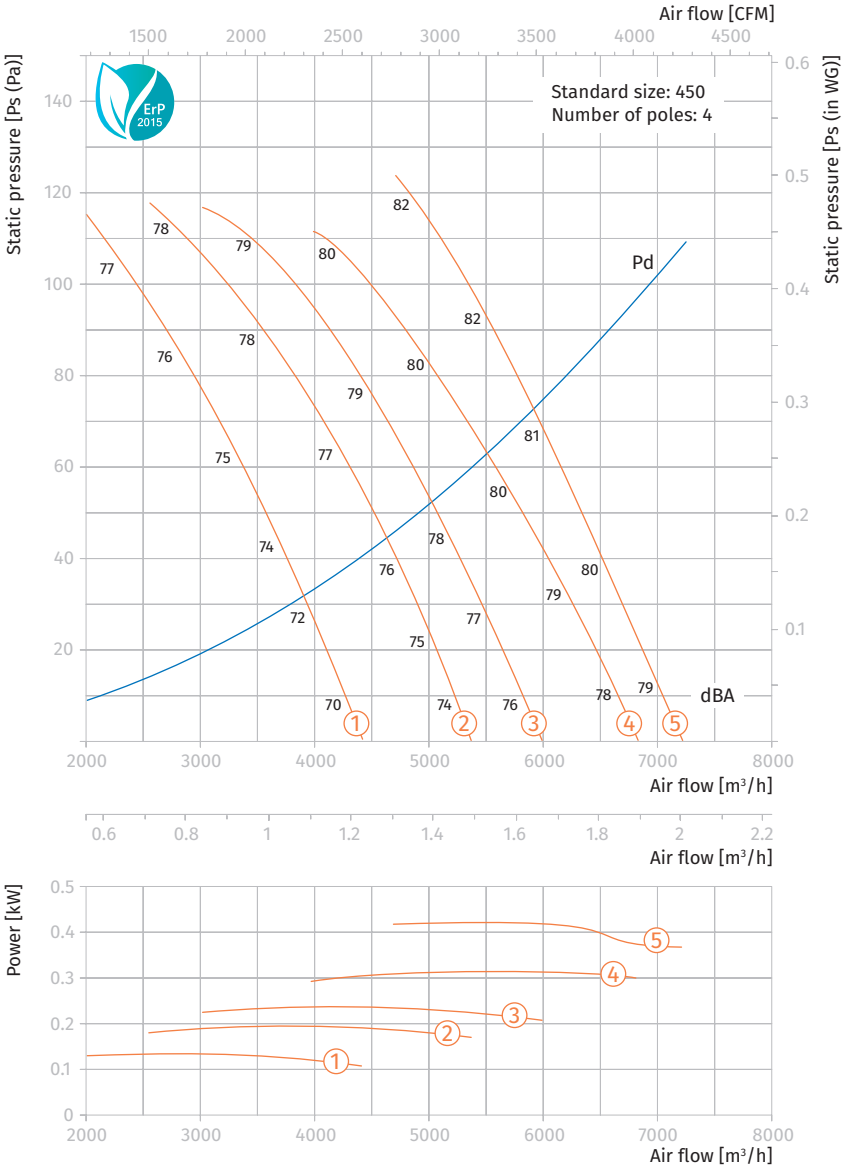

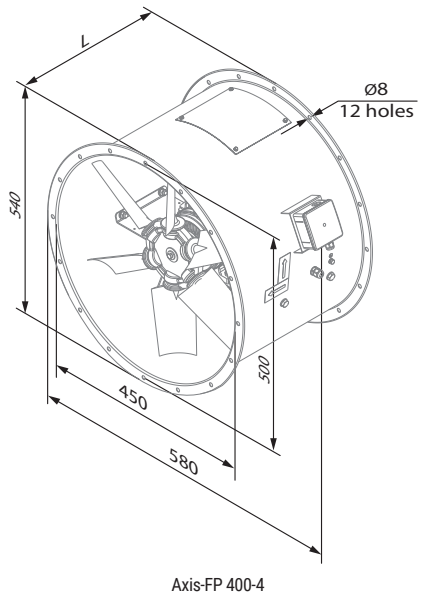

Axis-FP 400-4

AXIS-FP 450

Technical data

AXIS-FP 450-2

Size	Number of poles	Voltage [V / 50 Hz]	Model	Installed motor power Ny [kW]	RPM [min⁻¹]	Number of blades	Blade setting angle [°]	Weight [kg]	Lenght L [mm]	Curve number on graph
450	2	3~400	Axis-FP 450-2D/1.1-6/30/AL	1.1	2880	6	30	37.1	400	①
			Axis-FP 450-2D/1.5-6/35/AL	1.5	2880	6	35	42.1	400	②
			Axis-FP 450-2D/2.2-6/40/AL	2.2	2880	6	40	44.1	400	③
			Axis-FP 450-2D/3-8/40/AL	3	2880	8	40	53.6	500	④
			Axis-FP 450-2D/4-8/45/AL	4	2880	8	45	64.6	500	⑤
450	2/4	3~400	Axis-FP 450-2/4D/1.1/0.25-6/30/AL	1.1/0.25	2880/1440	6	30	37.1	400	①*
			Axis-FP 450-2/4D/1.5/0.37-6/35/AL	1.5/0.37	2880/1440	6	35	42.1	400	②*
			Axis-FP 450-2/4D/2.2/0.5-6/40/AL	2.2/0.5	2880/1440	6	40	44.1	400	③*
			Axis-FP 450-2/4D/3.1/0.8-8/40/AL	3.1/0.8	2880/1440	8	40	55.6	500	④*
			Axis-FP 450-2/4D/4.4/1.1-8/45/AL	4.4/1.1	2880/1440	8	45	65.6	500	⑤*

* maximum speed graph

Aerodynamic characteristics

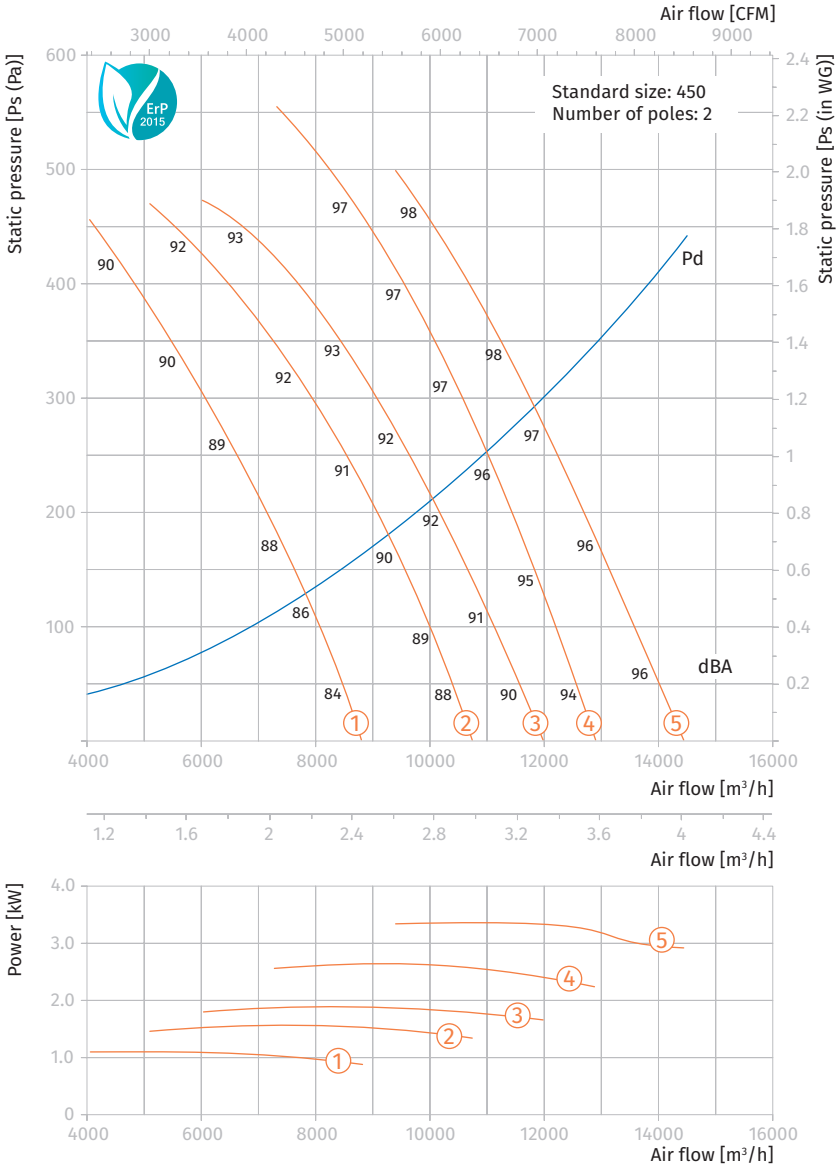

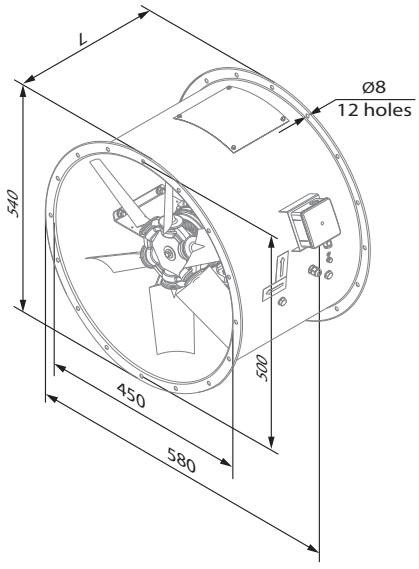

Axis-FP 450-2

Technical data

AXIS-FP 500-4

Size	Number of poles	Voltage [V / 50 Hz]	Model	Installed motor power Ny [kW]	RPM [min⁻¹]	Number of blades	Blade setting angle [°]	Weight [kg]	Lenght L [mm]	Curve number on graph
500	4	3~400	Axis-FP 500-4D/0.55-6/30/AL	0.55	1440	6	30	47.7	400	①
			Axis-FP 500-4D/0.55-6/35/AL	0.55	1440	6	35	47.7	400	②
			Axis-FP 500-4D/0.55-6/40/AL	0.55	1440	6	40	47.7	400	③
			Axis-FP 500-4D/0.55-6/45/AL	0.55	1440	6	45	47.7	400	④
			Axis-FP 500-4D/0.75-8/45/AL	0.75	1440	8	45	49.3	400	⑤

Aerodynamic characteristics

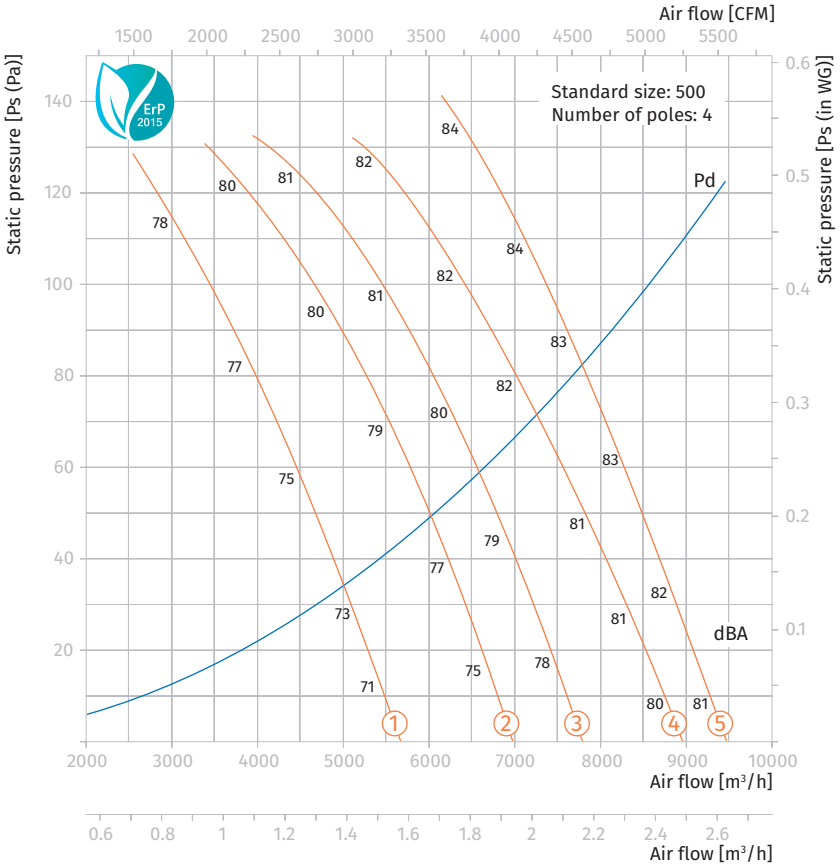

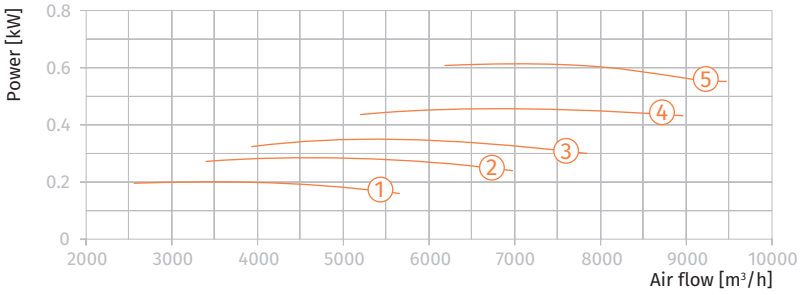

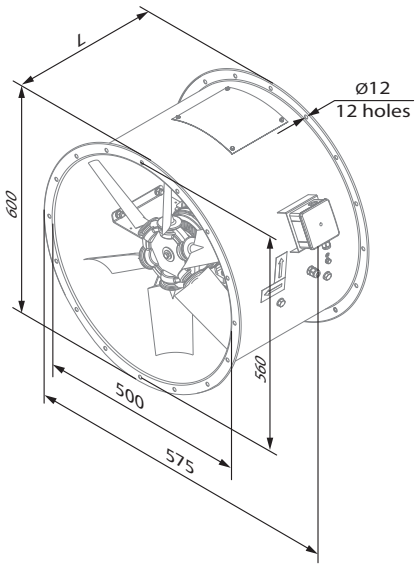

Axis-FP 500-4

Technical data

AXIS-FP 500-2

Size	Number of poles	Voltage [V / 50 Hz]	Model	Installed motor power Ny [kW]	RPM [min⁻¹]	Number of blades	Blade setting angle [°]	Weight [kg]	Lenght L [mm]	Curve number on graph
500	2	3~400	Axis-FP 500-2D/1.5-6/30/AL	1.5	2880	6	30	53.7	400	①
			Axis-FP 500-2D/2.2-6/35/AL	2.2	2880	6	35	55.7	400	②
			Axis-FP 500-2D/3-8/35/AL	3	2880	8	35	65.3	400	③
			Axis-FP 500-2D/4-8/40/AL	4	2880	8	40	76.3	500	④
			Axis-FP 500-2D/5.5-8/45/AL	5.5	2880	8	45	95.3	500	⑤
500	2/4	3~400	Axis-FP 500-2/4D/1.5/0.37-6/30/AL	1.5/0.37	2880/1440	6	30	53.7	400	①*
			Axis-FP 500-2/4D/2.2/0.5-6/35/AL	2.2/0.5	2880/1440	6	35	55.7	400	②*
			Axis-FP 500-2/4D/3.1/0.8-8/35/AL	3.1/0.8	2880/1440	6	40	67.3	500	③*
			Axis-FP 500-2/4D/4.4/1.1-8/40/AL	4.4/1.1	2880/1440	8	40	77.3	500	④*
			Axis-FP 500-2/4D/6.0/1.5-8/45/AL	6/1.5	2880/1440	8	45	92.3	550	⑤*

* maximum speed graph

Aerodynamic characteristics

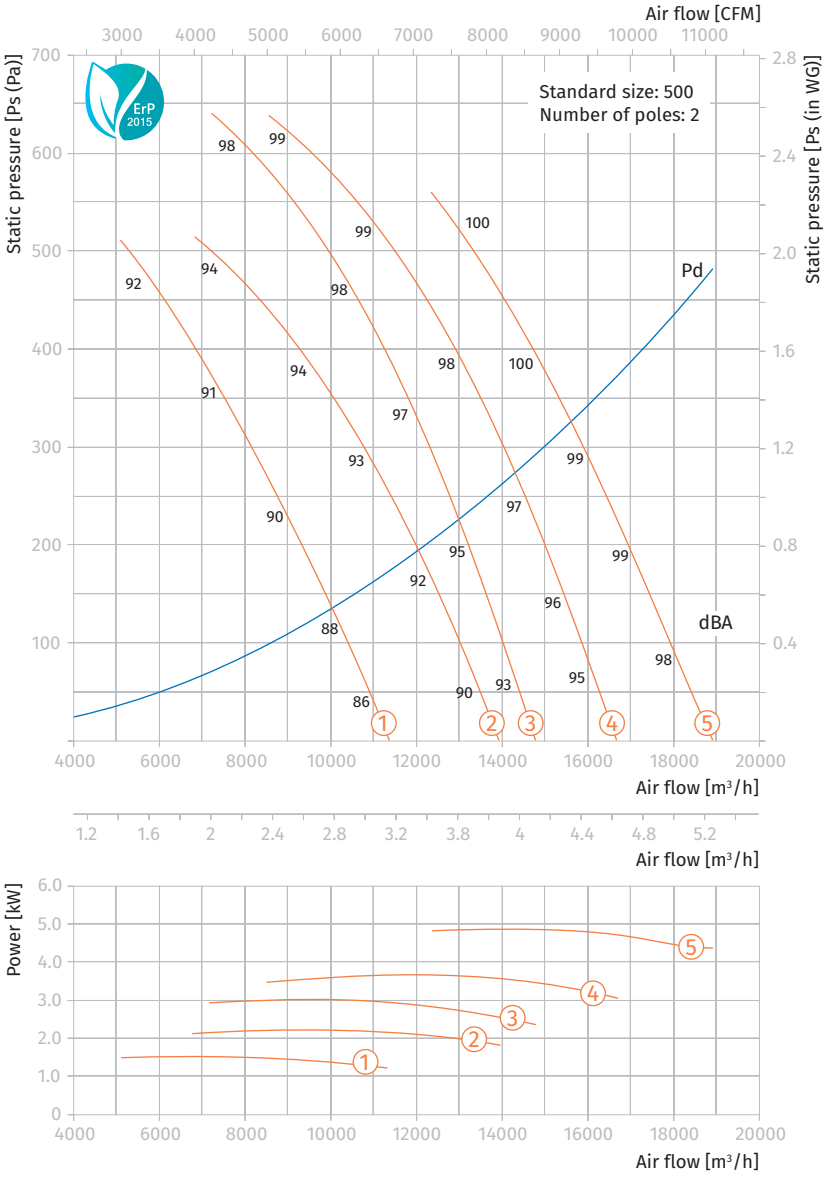

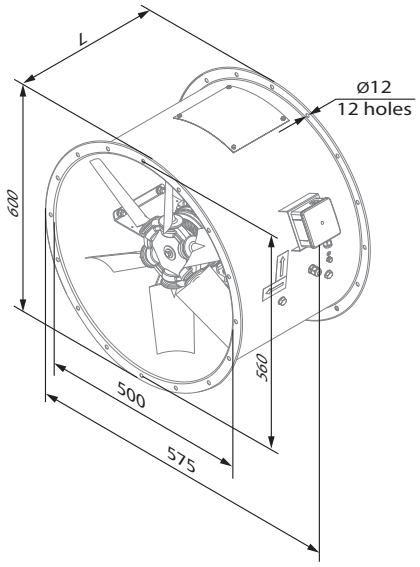

Axis-FP 500-2

Technical data

AXIS-FP 560-4

Size	Number of poles	Voltage [V / 50 Hz]	Model	Installed motor power Ny [kW]	RPM [min⁻¹]	Number of blades	Blade setting angle [°]	Weight [kg]	Lenght L [mm]	Curve number on graph
560	4	3~400	Axis-FP 560-4D/0.55-6/30/AL	0.55	1440	6	30	64.8	400	①
			Axis-FP 560-4D/0.55-6/35/AL	0.55	1440	6	35	64.8	400	②
			Axis-FP 560-4D/0.55-6/40/AL	0.55	1440	6	40	64.8	400	③
			Axis-FP 560-4D/0.75-6/45/AL	0.75	1440	6	45	65.8	400	④
			Axis-FP 560-4D/1.1-8/45/AL	1.1	1440	8	45	72.4	400	⑤

Aerodynamic characteristics

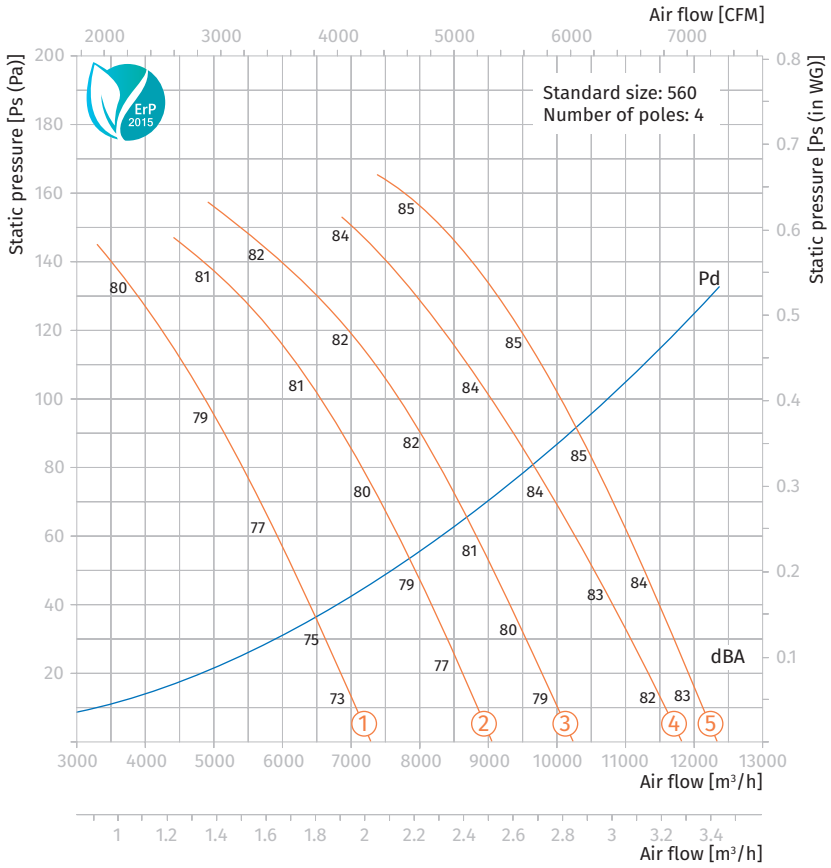

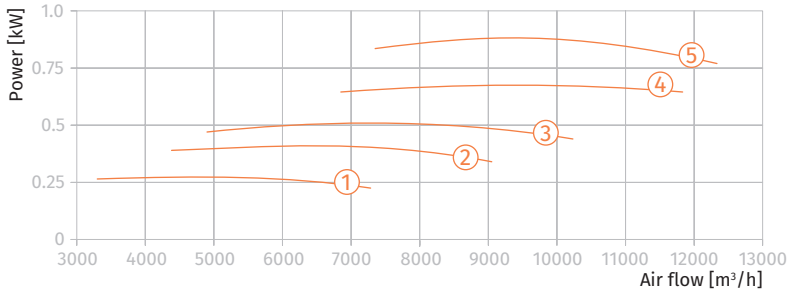

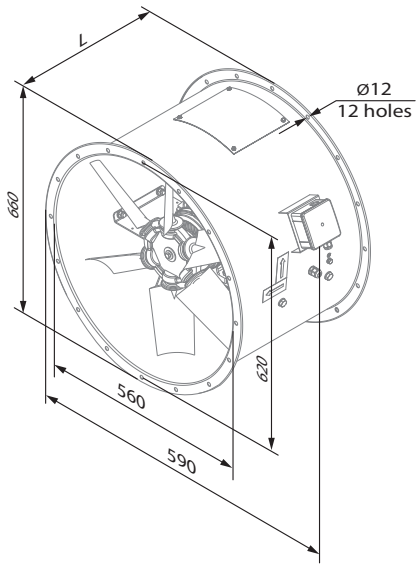

Axis-FP 560-4

AXIS-FP 560

Technical data

AXIS-FP 560-2

Size	Number of poles	Voltage [V / 50 Hz]	Model	Installed motor power Ny [kW]	RPM [min⁻¹]	Number of blades	Blade setting angle [°]	Weight [kg]	Lenght L [mm]	Curve number on graph
560	2	3~400	Axis-FP 560-2D/2.2-6/30/AL	2.2	2880	6	30	72.8	400	①
			Axis-FP 560-2D/3-8/30/AL	3	2880	8	30	82.4	400	②
			Axis-FP 560-2D/4-8/35/AL	4	2880	8	35	93.4	500	③
			Axis-FP 560-2D/5.5-8/40/AL	5.5	2880	8	40	112.4	500	④
			Axis-FP 560-2D/7.5-8/45/AL	7.5	2880	8	45	118.4	500	⑤
560	2/4	3~400	Axis-FP 560-2/4D/2.2/0.5-6/30/AL	2.2/0.5	2880/1440	6	30	72.8	400	①*
			Axis-FP 560-2/4D/3.1/0.8-8/30/AL	3.1/0.8	2880/1440	8	30	84.4	500	②*
			Axis-FP 560-2/4D/4.4/1.1-8/35/AL	4.4/1.1	2880/1440	8	35	94.4	500	③*
			Axis-FP 560-2/4D/6/1.5-8/40/AL	6/1.5	2880/1440	8	40	109.4	550	④*
			Axis-FP 560-2/4D/8/2-8/45/AL	8/2	2880/1440	8	45	118.4	550	⑤*

* maximum speed graph

Aerodynamic characteristics

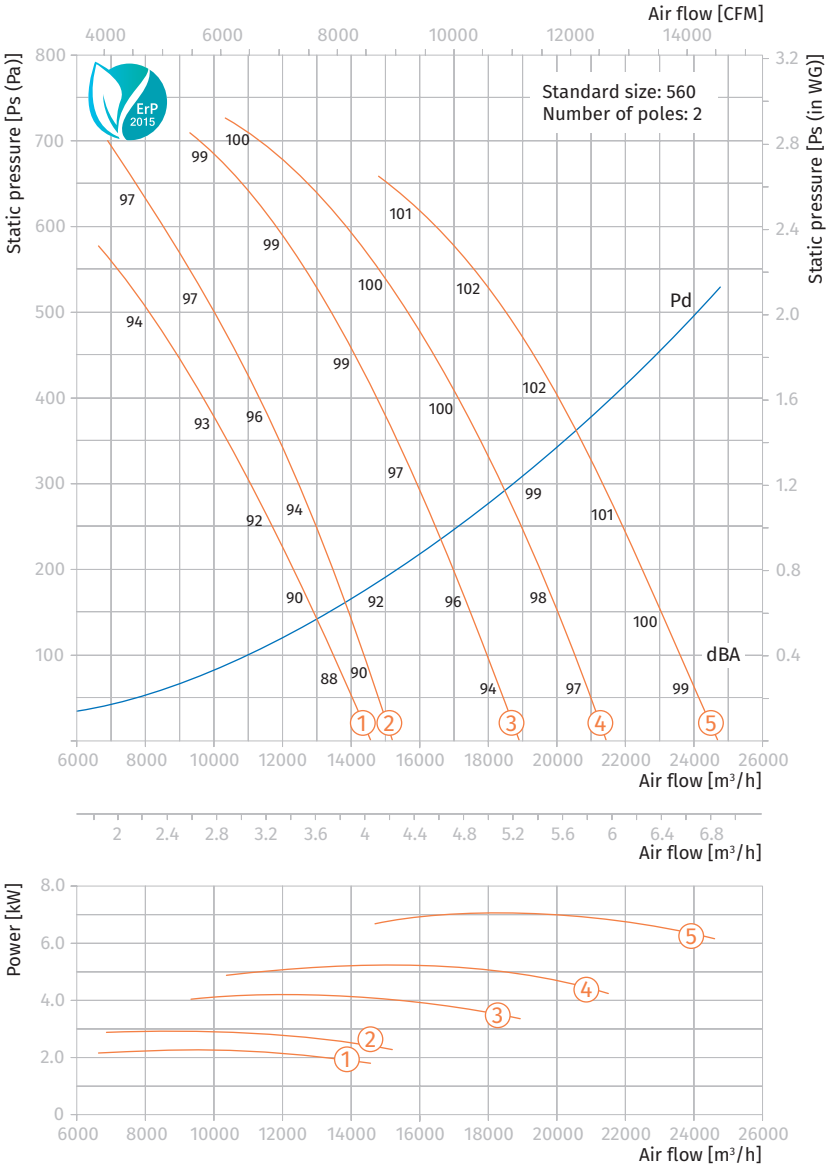

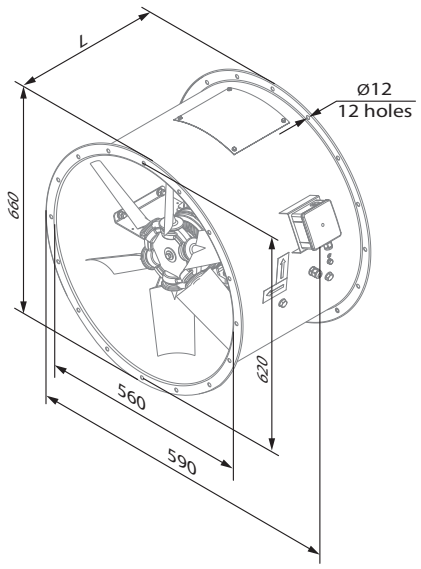

Axis-FP 560-2

Technical data

AXIS-FP 630-4

Size	Number of poles	Voltage [V / 50 Hz]	Model	Installed motor power Ny [kW]	RPM [min⁻¹]	Number of blades	Blade setting angle [°]	Weight [kg]	Lenght L [mm]	Curve number on graph
630	4	3~400	Axis-FP 630-4D/0.55-8/30/AL	0.55	1440	8	30	71	400	①
			Axis-FP 630-4D/0.75-8/35/AL	0.75	1440	8	35	72	400	②
			Axis-FP 630-4D/1.1-8/40/AL	1.1	1440	8	40	78	400	③
			Axis-FP 630-4D/1.5-6/32.5/AL	1.5	1440	6	32.5	82.1	400	④
			Axis-FP 630-4D/1.5-8/45/AL	1.5	1440	8	45	81	400	⑤
			Axis-FP 630-4D/1.5-6/37.5/AL	1.5	1440	6	37.5	82.1	400	⑥
			Axis-FP 630-4D/2.2-6/40/AL	2.2	1440	6	40	88.1	400	⑦
			Axis-FP 630-4D/2.2-6/45/AL	2.2	1440	6	45	88.1	400	⑧

Aerodynamic characteristics

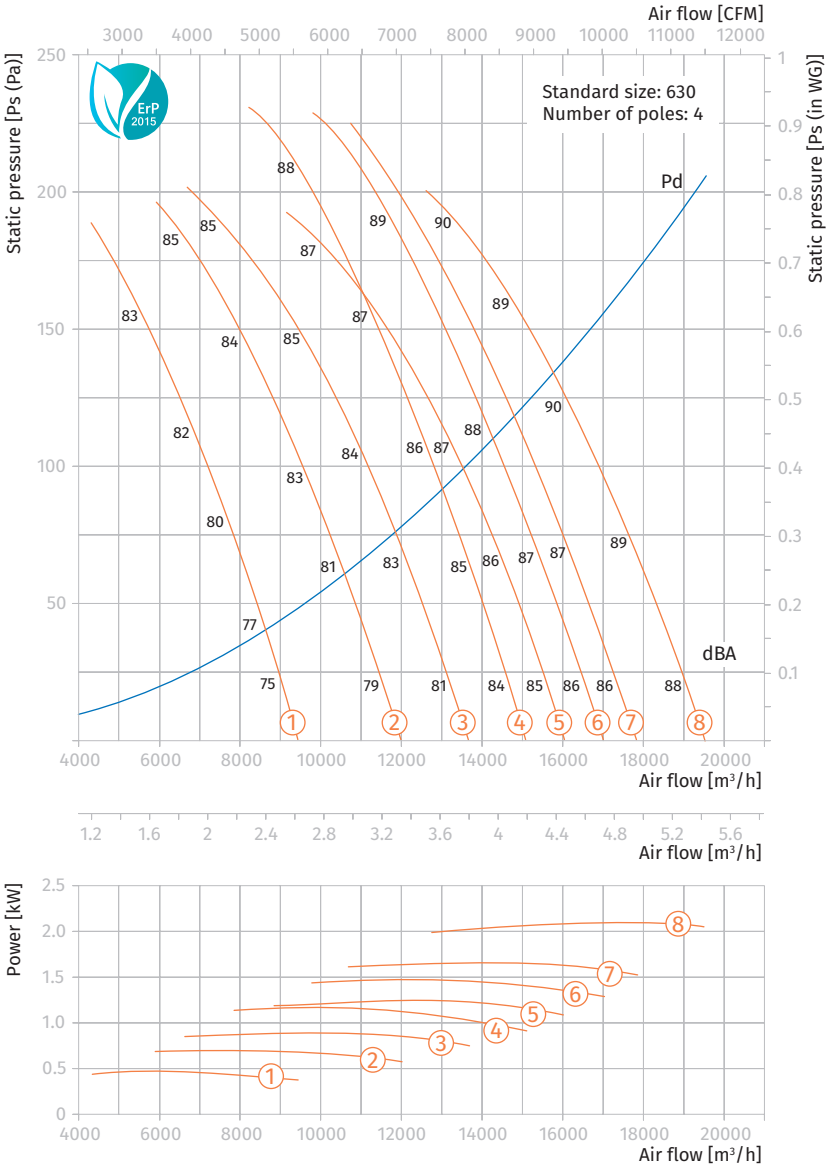

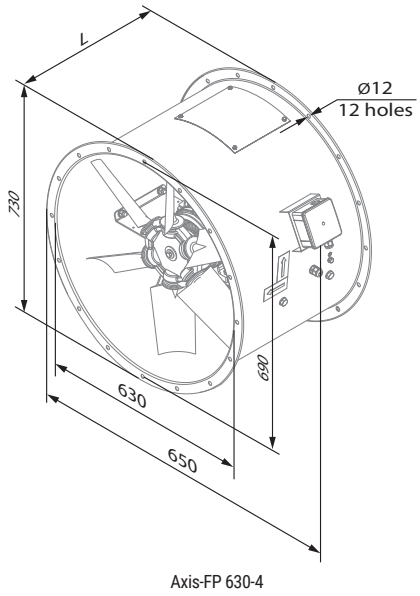

Axis-FP 630-4

Technical data

AXIS-FP 630-2

Size	Number of poles	Voltage [V / 50 Hz]	Model	Installed motor power Ny [kW]	RPM [min⁻¹]	Number of blades	Blade setting angle [°]	Weight [kg]	Lenght L [mm]	Curve number on graph
630	2	3~400	Axis-FP 630-2D/4-8/30/AL	4	2880	8	30	99	500	①
			Axis-FP 630-2D/5.5-8/35/AL	5.5	2880	8	35	118	500	②
			Axis-FP 630-2D/7.5-8/40/AL	7.5	2880	8	40	124	500	③
			Axis-FP 630-2D/9.2-6/30/AL	9.2	2880	6	30	143.1	600	④
			Axis-FP 630-2D/11-6/32.5/AL	11	2880	6	32.5	162.1	600	⑤
			Axis-FP 630-2D/11-6/35/AL	11	2880	6	35	162.1	600	⑥
			Axis-FP 630-2D/15-6/37.5/AL	15	2880	6	37.5	169.1	700	⑦
			Axis-FP 630-2D/15-6/40/AL	15	2880	6	40	169.1	700	⑧
			Axis-FP 630-2D/18.5-6/45/AL	18.5	2880	6	45	184.1	700	⑨

Aerodynamic characteristics

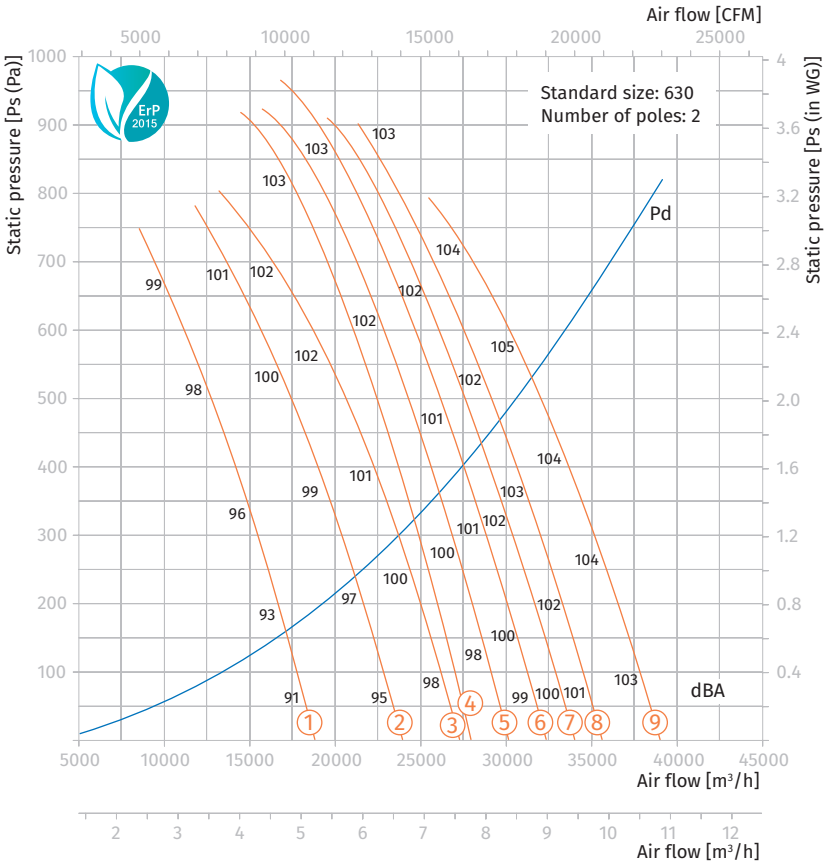

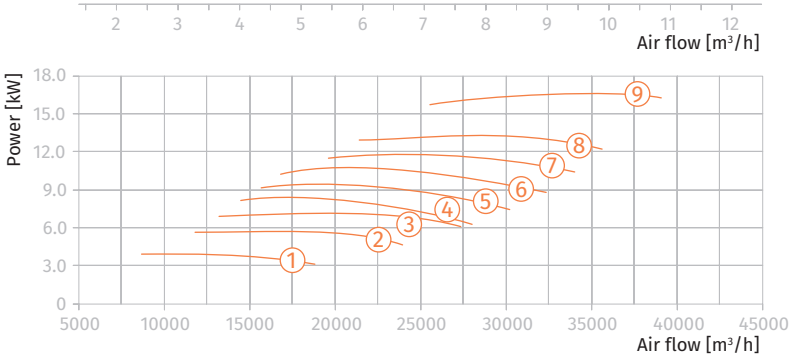

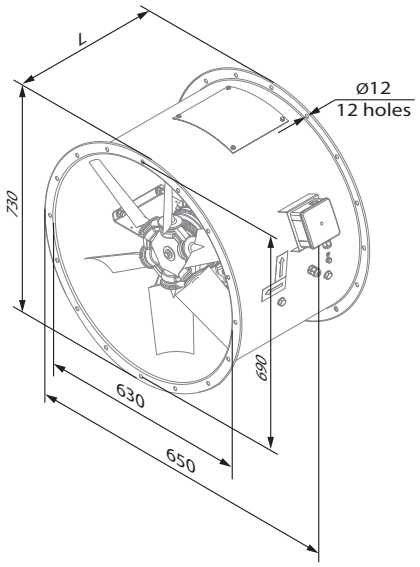

Axis-FP 630-2

Technical data

AXIS-FP 630-4

Size	Number of poles	Voltage [V / 50 Hz]	Model	Installed motor power Ny [kW]	RPM [min⁻¹]	Number of blades	Blade setting angle [°]	Weight [kg]	Lenght L [mm]	Curve number on graph
630	4/8	3~400	Axis-FP 630-4/8D/0.6/0.15-8/30/AL	0.6/0.15	1440/720	8	30	72	400	①*
			Axis-FP 630-4/8D/0.8/0.2-8/35/AL	0.8/0.2	1440/720	8	35	72	400	②*
			Axis-FP 630-4/8D/1.2/0.3-8/40/AL	1.2/0.3	1440/720	8	40	77	400	③*
			Axis-FP 630-4/8D/1.2/0.3-6/32.5/AL	1.2/0.3	1440/720	6	32.5	78.1	400	④*
			Axis-FP 630-4/8D/1.6/0.4-8/45/AL	1.6/0.4	1440/720	8	45	80	400	⑤*
			Axis-FP 630-4/8D/1.6/0.4-6/37.5/AL	1.6/0.4	1440/720	6	37.5	81.1	400	⑥*
			Axis-FP 630-4/8D/2.2/0.55-6/40/AL	2.2/0.55	1440/720	6	40	88.1	500	⑦*
			Axis-FP 630-4/8D/2.2/0.55-6/45/AL	2.2/0.55	1440/720	6	45	88.1	500	⑧*

* maximum speed graph

Aerodynamic characteristics

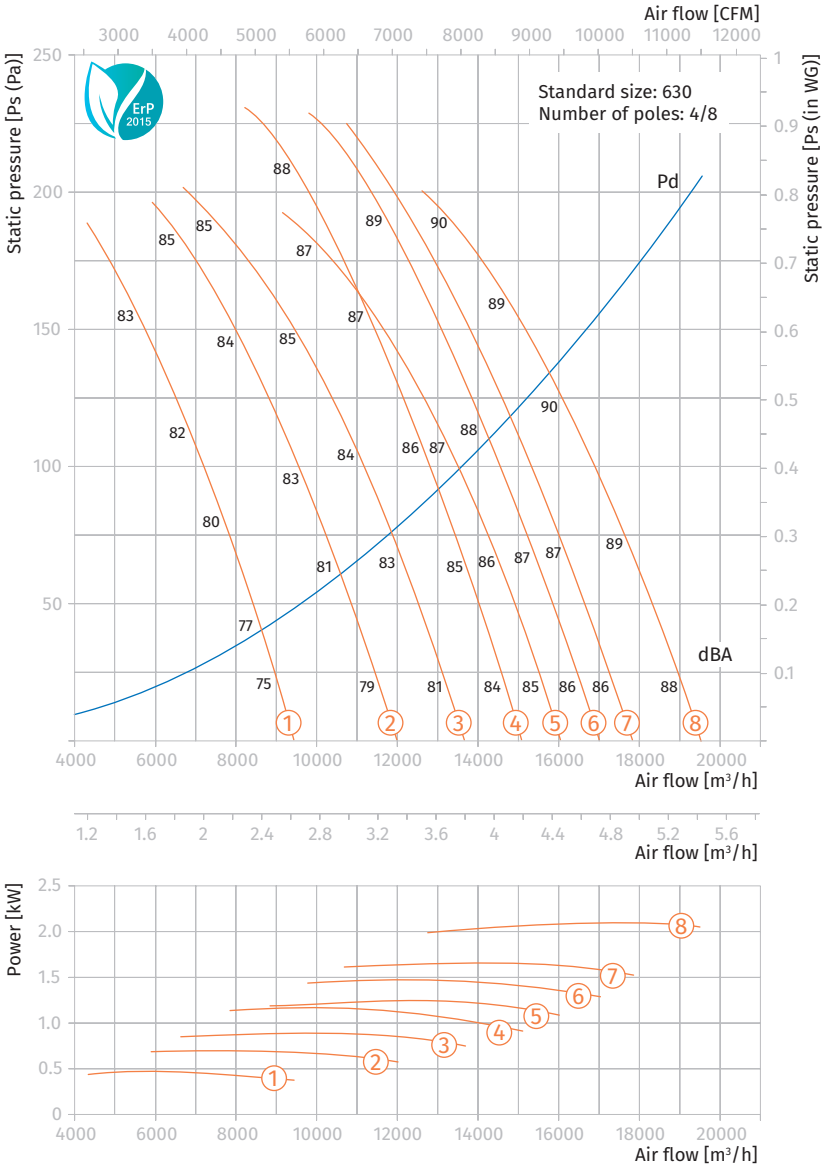

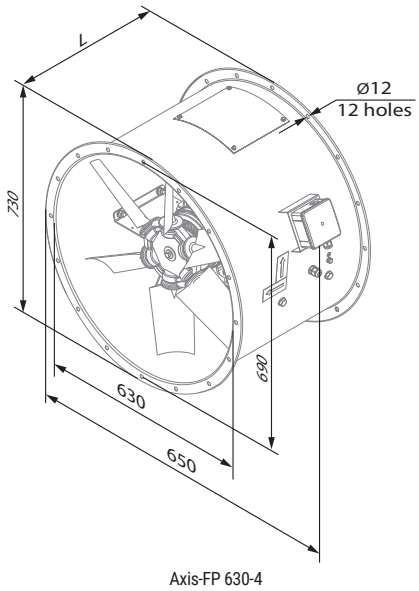

Axis-FP 630-4

Technical data

AXIS-FP 630-2

Size	Number of poles	Voltage [V / 50 Hz]	Model	Installed motor power Ny [kW]	RPM [min⁻¹]	Number of blades	Blade setting angle [°]	Weight [kg]	Lenght L [mm]	Curve number on graph
630	2/4	3~400	Axis-FP 630-2/4D/4.4/1.1-8/30/AL	4.4/1.1	2880/1440	8	30	100	500	①*
			Axis-FP 630-2/4D/6/1.5-8/35/AL	6/1.5	2880/1440	8	35	115	600	②*
			Axis-FP 630-2/4D/8/2-8/40/AL	8/2	2880/1440	8	40	124	600	③*
			Axis-FP 630-2/4D/12/3-6/30/AL	12/3	2880/1440	6	30	176.1	700	④*
			Axis-FP 630-2/4D/12/3-6/32.5/AL	12/3	2880/1440	6	32.5	176.1	700	⑤*
			Axis-FP 630-2/4D/12/3-6/35/AL	12/3	2880/1440	6	35	176.1	700	⑥*
			Axis-FP 630-2/4D/12/3-6/37.5/AL	12/3	2880/1440	6	37.5	176.1	700	⑦*
			Axis-FP 630-2/4D/16/4-6/40/AL	16/4	2880/1440	6	40	193.1	700	⑧*
			Axis-FP 630-2/4D/20/5.5-6/45/AL	20/5.5	2880/1440	6	45	218.1	700	⑨*

* maximum speed graph

Aerodynamic characteristics

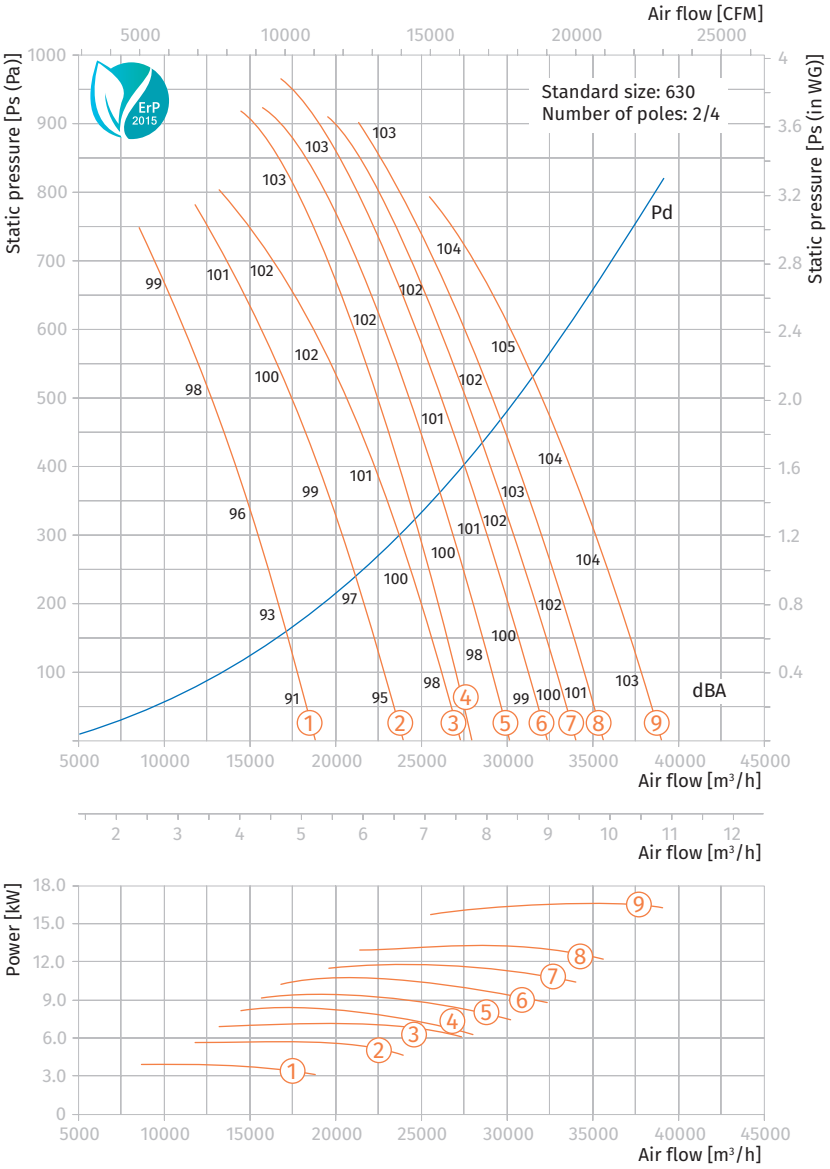

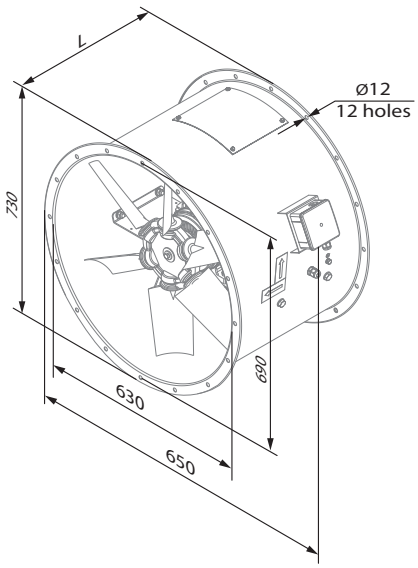

Axis-FP 630-2

Technical data

AXIS-FP 710-4

Size	Number of poles	Voltage [V / 50 Hz]	Model	Installed motor power Ny [kW]	RPM [min⁻¹]	Number of blades	Blade setting angle [°]	Weight [kg]	Lenght L [mm]	Curve number on graph
710	4	3~400	Axis-FP 710-4D/0.75-6/20/AL	0.75	1440	6	20	99.3	450	①
			Axis-FP 710-4D/1.1-6/25/AL	1.1	1440	6	25	105.3	450	②
			Axis-FP 710-4D/1.5-6/30/AL	1.5	1440	6	30	108.3	450	③
			Axis-FP 710-4D/2.2-6/32.5/AL	2.2	1440	6	32.5	114.3	450	④
			Axis-FP 710-4D/2.2-6/35/AL	2.2	1440	6	35	114.3	450	⑤
			Axis-FP 710-4D/2.2-6/37.5/AL	2.2	1440	6	37.5	114.3	450	⑥
			Axis-FP 710-4D/3-6/40/AL	3	1440	6	40	117.3	560	⑦
			Axis-FP 710-4D/4-6/45/AL	4	1440	6	45	131.3	560	⑧

Aerodynamic characteristics

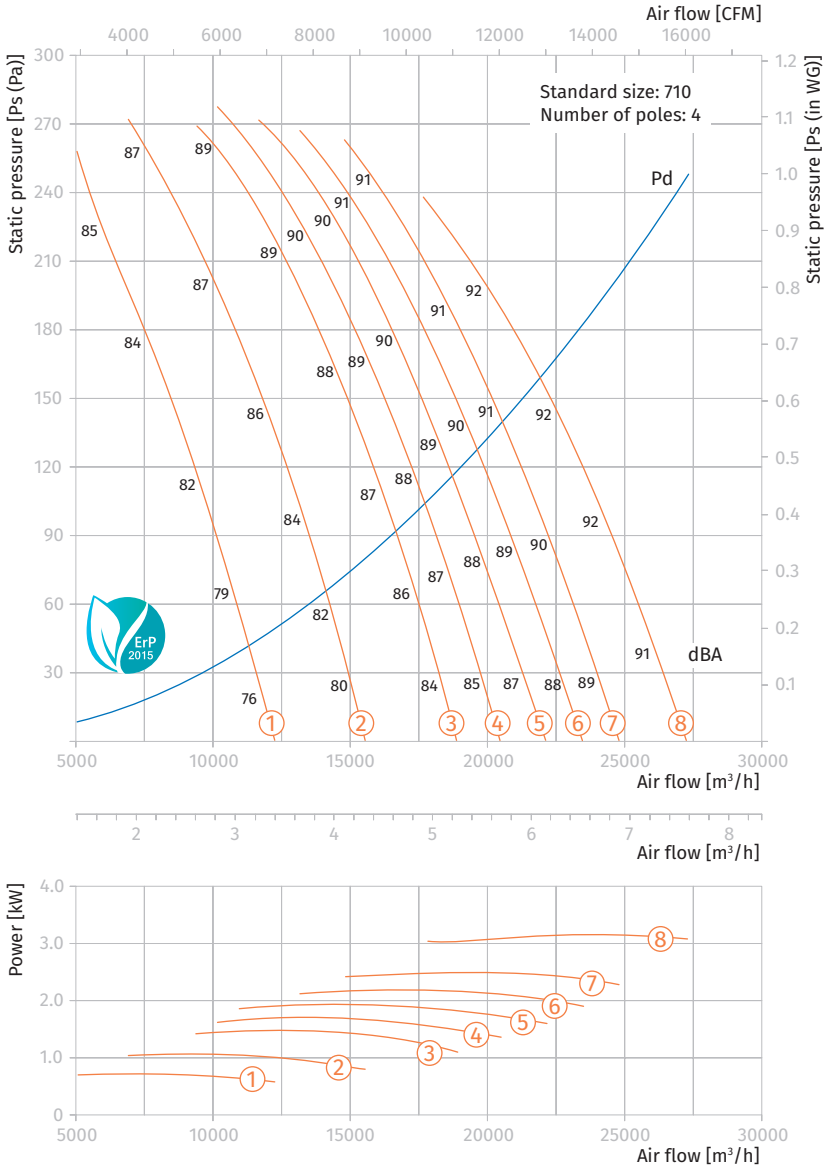

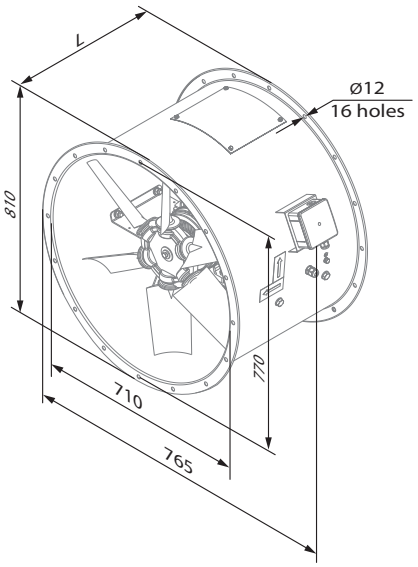

Axis-FP 710-4

AXIS-FP 710

Technical data

AXIS-FP 710-2

Size	Number of poles	Voltage [V / 50 Hz]	Model	Installed motor power Ny [kW]	RPM [min⁻¹]	Number of blades	Blade setting angle [°]	Weight [kg]	Lenght L [mm]	Curve number on graph
710	2	3~400	Axis-FP 710-2D/7.5-6/20/AL	7.5	2880	6	20	151.3	560	①
			Axis-FP 710-2D/9.2-6/25/AL	9.2	2880	6	25	169.3	560	②
			Axis-FP 710-2D/15-6/30/AL	15	2880	6	30	195.3	750	③
			Axis-FP 710-2D/15-6/32.5/AL	15	2880	6	32.5	195.3	750	④
			Axis-FP 710-2D/18.5-6/35/AL	18.5	2880	6	35	210.3	750	⑤
			Axis-FP 710-2D/18.5-6/37.5/AL	18.5	2880	6	37.5	210.3	750	⑥
			Axis-FP 710-2D/22-6/40/AL	22	2880	6	40	256.3	750	⑦

Aerodynamic characteristics

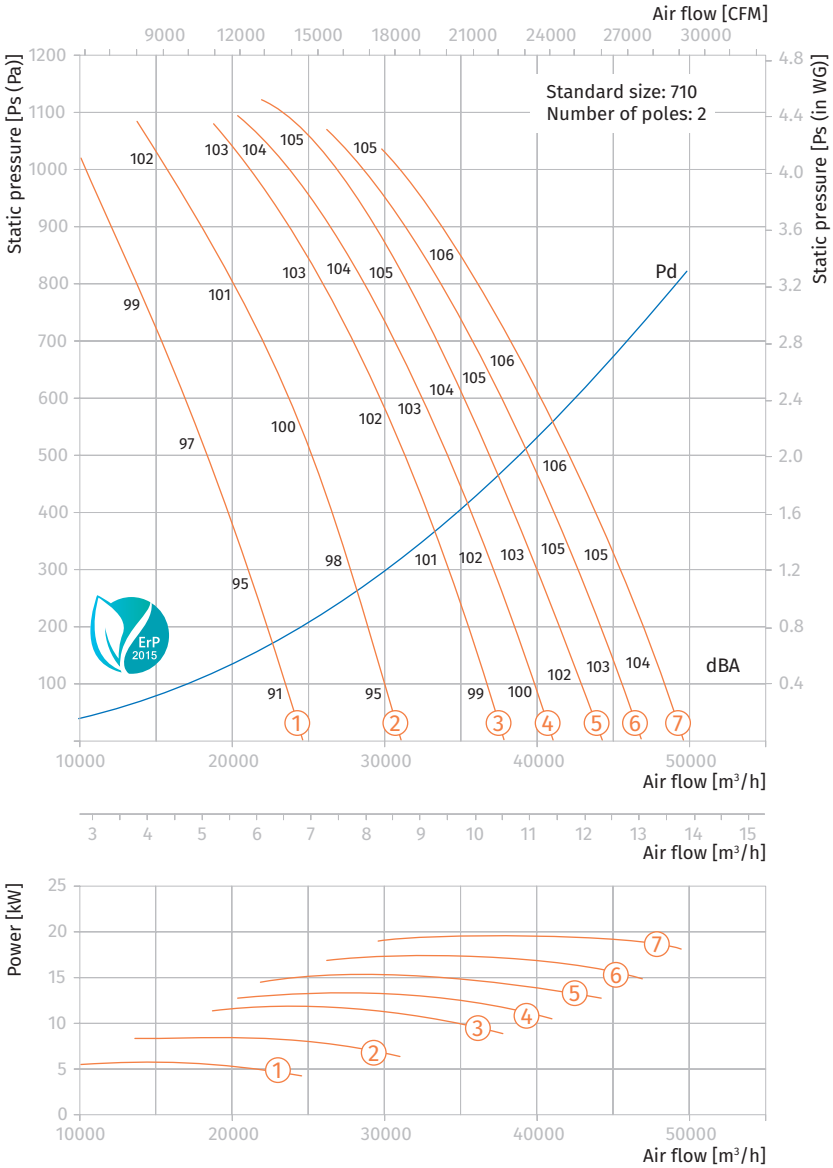

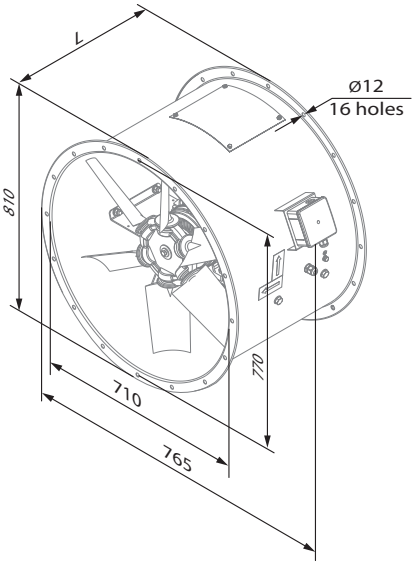

Axis-FP 710-2

AXIS-FP 710

Technical data

AXIS-FP 710-4

Size	Number of poles	Voltage [V / 50 Hz]	Model	Installed motor power Ny [kW]	RPM [min⁻¹]	Number of blades	Blade setting angle [°]	Weight [kg]	Lenght L [mm]	Curve number on graph
710	4/8	3~400	Axis-FP 710-4/8D/0.8/0.2-6/20/AL	0.8/0.2	1440/720	6	20	99.3	450	①*
			Axis-FP 710-4/8D/1.2/0.3-6/25/AL	1.2/0.3	1440/720	6	25	104.3	450	②*
			Axis-FP 710-4/8D/1.6/0.4-6/30/AL	1.6/0.4	1440/720	6	30	107.3	450	③*
			Axis-FP 710-4/8D/2.2/0.55-6/32.5/AL	2.2/0.55	1440/720	6	32.5	114.3	560	④*
			Axis-FP 710-4/8D/2.2/0.55-6/35/AL	2.2/0.55	1440/720	6	35	114.3	560	⑤*
			Axis-FP 710-4/8D/2.2/0.55-6/37.5/AL	2.2/0.55	1440/720	6	37.5	114.3	560	⑥*
			Axis-FP 710-4/8D/2.8/0.7-6/40/AL	2.8/0.7	1440/720	6	40	117.3	560	⑦*
			Axis-FP 710-4/8D/3.8/1-6/45/AL	3.8/1	1440/720	6	45	127.3	560	⑧*

* maximum speed graph

Aerodynamic characteristics

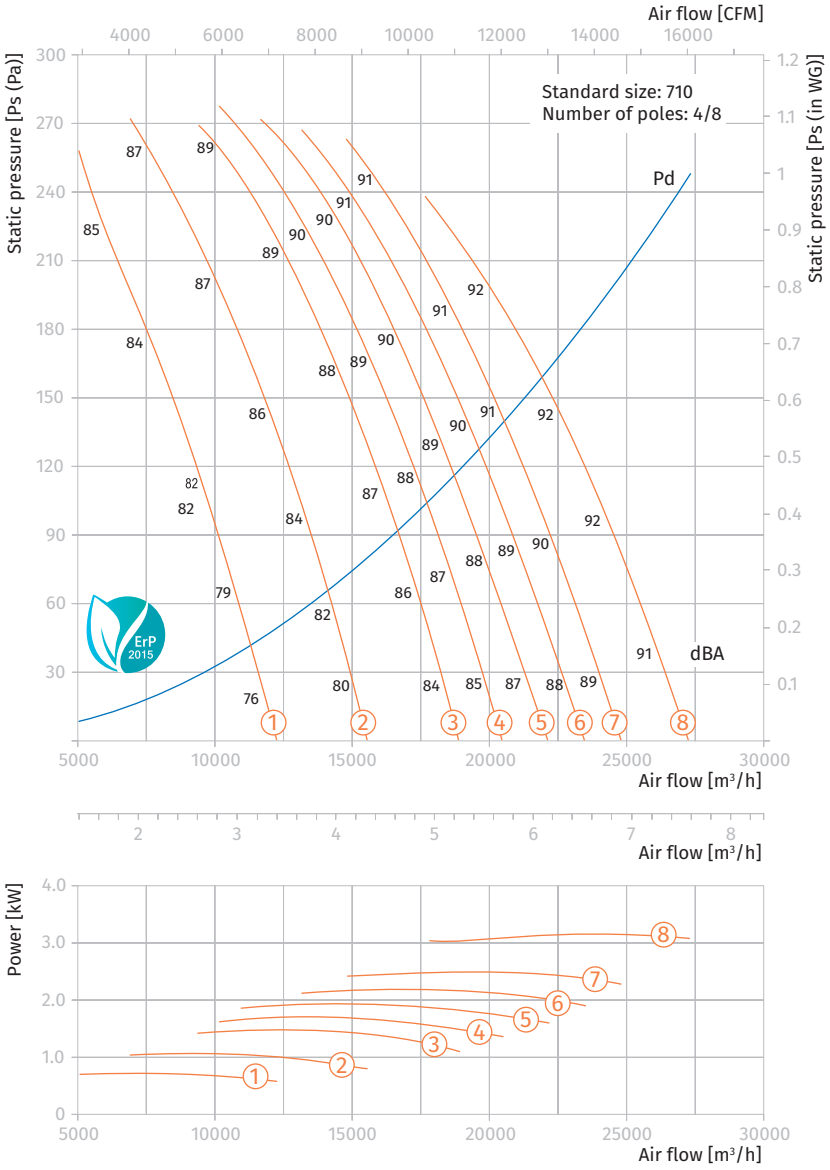

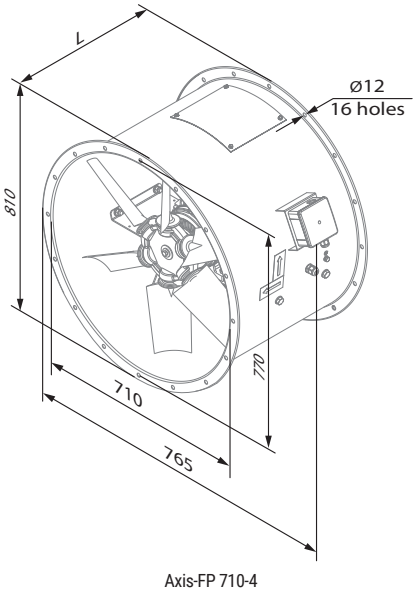

Axis-FP 710-4

Technical data

AXIS-FP 710-2

Size	Number of poles	Voltage [V / 50 Hz]	Model	Installed motor power Ny [kW]	RPM [min⁻¹]	Number of blades	Blade setting angle [°]	Weight [kg]	Lenght L [mm]	Curve number on graph
710	2/4	3~400	Axis-FP 710-2/4D/6/1.5-6/20/AL	6/1.5	2880/1440	6	20	142.3	560	①*
			Axis-FP 710-2/4D/12/3-6/25/AL	12/3	2880/1440	6	25	202.3	750	②*
			Axis-FP 710-2/4D/12/3-6/30/AL	12/3	2880/1440	6	30	202.3	750	③*
			Axis-FP 710-2/4D/16/4-6/32.5/AL	16/4	2880/1440	6	32.5	219.3	750	④*
			Axis-FP 710-2/4D/16/4-6/35/AL	16/4	2880/1440	6	35	219.3	750	⑤*
			Axis-FP 710-2/4D/20/5.5-6/37.5/AL	20/5.5	2880/1440	6	37.5	244.3	750	⑥*
			Axis-FP 710-2/4D/20/5.5-6/40/AL	20/5.5	2880/1440	6	40	244.3	750	⑦*

* maximum speed graph

Aerodynamic characteristics

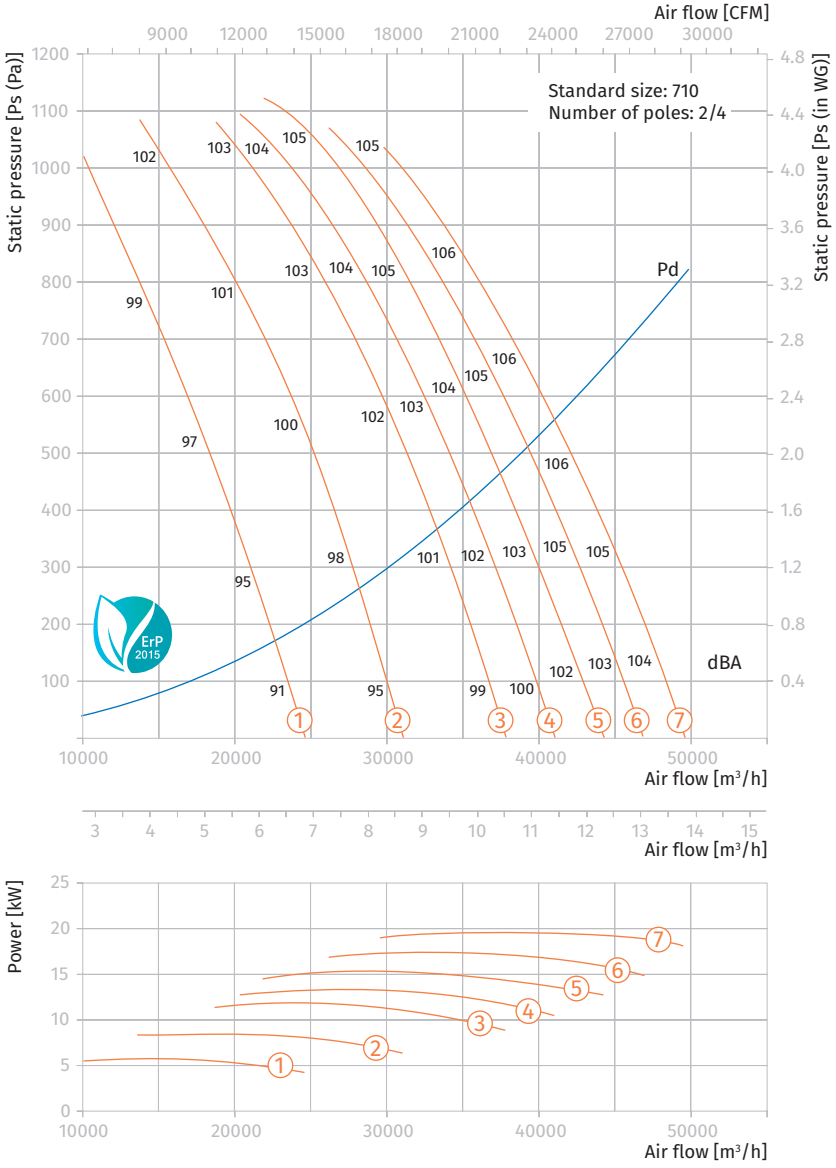

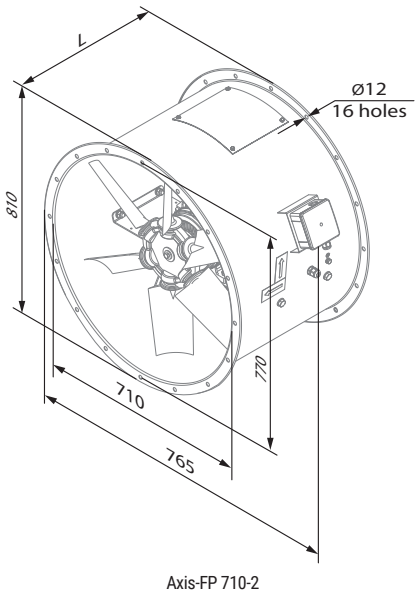

Axis-FP 710-2

AXIS-FP 710

Technical data

AXIS-FP 800-6D

Size	Number of poles	Voltage [V / 50 Hz]	Model	Installed motor power Ny [kW]	RPM [min⁻¹]	Number of blades	Blade setting angle [°]	Weight [kg]	Lenght L [mm]	Curve number on graph
800	6	3~400	Axis-FP 800-6D/0.37-6/20/AL	0.37	960	6	20	109.6	400	①
			Axis-FP 800-6D/0.55-6/25/AL	0.55	960	6	25	110.6	400	②
			Axis-FP 800-6D/0.75-6/30/AL	0.75	960	6	30	115.6	400	③
			Axis-FP 800-6D/0.75-6/32.5/AL	0.75	960	6	32.5	115.6	400	④
			Axis-FP 800-6D/1.1-6/35/AL	1.1	960	6	35	119.6	400	⑤
			Axis-FP 800-6D/1.1-6/37.5/AL	1.1	960	6	37.5	119.6	400	⑥
			Axis-FP 800-6D/1.1-6/40/AL	1.1	960	6	40	119.6	400	⑦
			Axis-FP 800-6D/1.5-6/45/AL	1.5	960	6	45	122.6	500	⑧

Aerodynamic characteristics

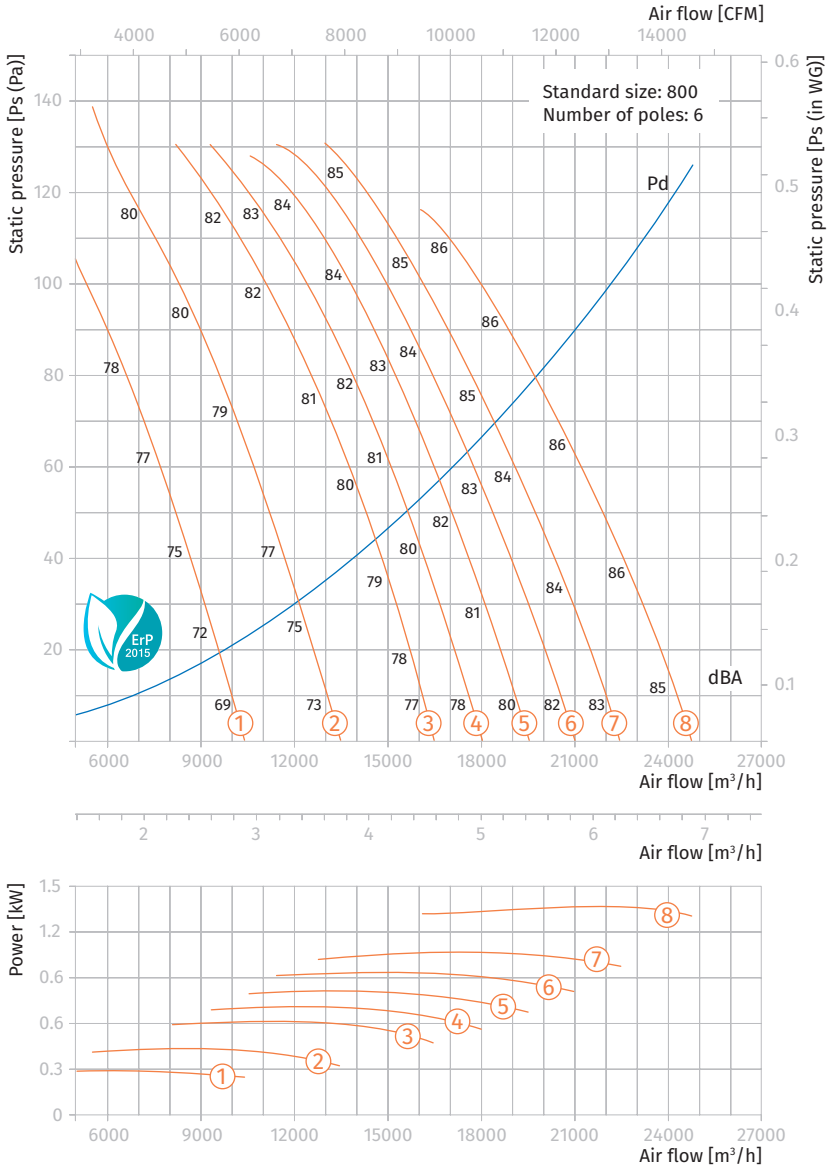

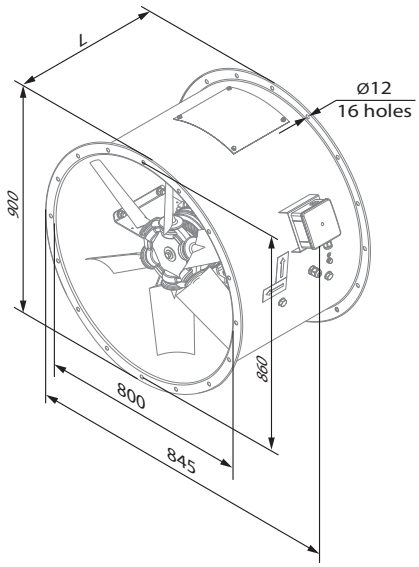

Axis-FP 800-6

Technical data

AXIS-FP 800-4

Size	Number of poles	Voltage [V / 50 Hz]	Model	Installed motor power Ny [kW]	RPM [min⁻¹]	Number of blades	Blade setting angle [°]	Weight [kg]	Lenght L [mm]	Curve number on graph
800	4	3~400	Axis-FP 800-4D/1.1-6/20/AL	1.1	1440	6	20	116.6	400	①
			Axis-FP 800-4D/1.5-6/25/AL	1.5	1440	6	25	119.6	400	②
			Axis-FP 800-4D/2.2-6/30/AL	2.2	1440	6	30	125.6	400	③
			Axis-FP 800-4D/3-6/32.5/AL	3	1440	6	32.5	128.6	500	④
			Axis-FP 800-4D/3-6/35/AL	3	1440	6	35	128.6	500	⑤
			Axis-FP 800-4D/4-6/37.5/AL	4	1440	6	37.5	142.6	500	⑥
			Axis-FP 800-4D/4-6/40/AL	4	1440	6	40	142.6	500	⑦
			Axis-FP 800-4D/5.5-6/45/AL	5.5	1440	6	45	156.6	500	⑧
800	4/8	3~400	Axis-FP 800-4/8D/1.2/0.3-6/20/AL	1.2/0.3	1440/720	6	20	115.6	400	①*
			Axis-FP 800-4/8D/1.6/0.4-6/25/AL	1.6/0.4	1440/720	6	25	118.6	400	②*
			Axis-FP 800-4/8D/2.2/0.55-6/30/AL	2.2/0.55	1440/720	6	30	125.6	500	③*
			Axis-FP 800-4/8D/2.8/0.7-6/32.5/AL	2.8/0.7	1440/720	6	32.5	128.6	500	④*
			Axis-FP 800-4/8D/2.8/0.7-6/35/AL	2.8/0.7	1440/720	6	35	128.6	500	⑤*
			Axis-FP 800-4/8D/3.8/1-6/37.5/AL	3.8/1	1440/720	6	37.5	138.6	500	⑥*
			Axis-FP 800-4/8D/3.8/1-6/40/AL	3.8/1	1440/720	6	40	138.6	500	⑦*
			Axis-FP 800-4/8D/5/1.3-6/45/AL	5/1.3	1440/720	6	45	163.6	600	⑧*

* maximum speed graph

Aerodynamic characteristics

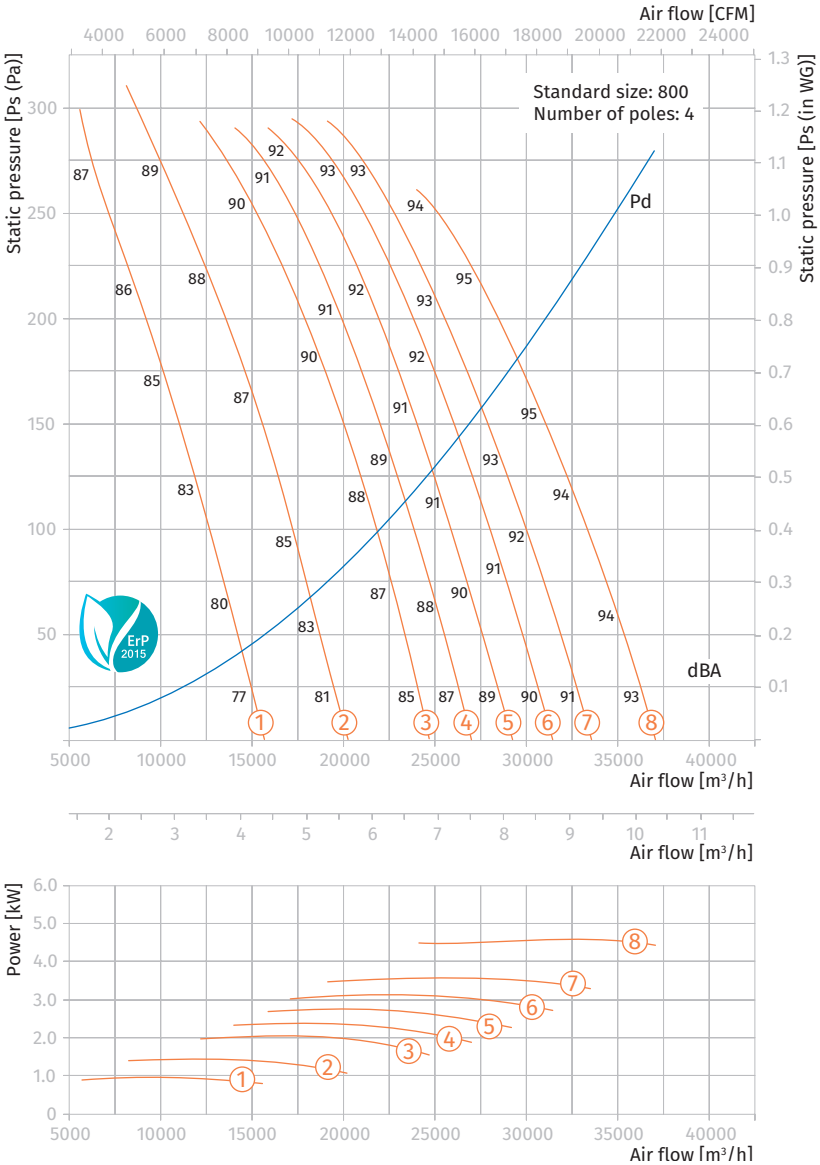

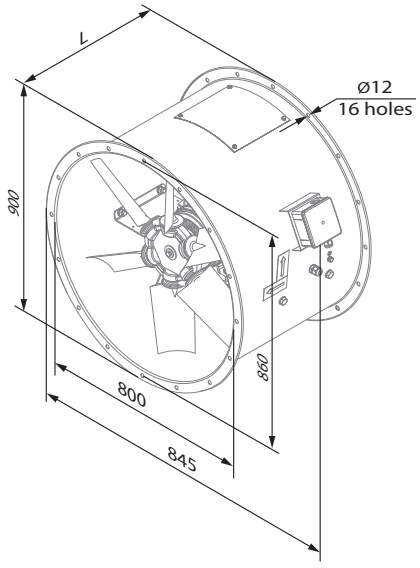

Axis-FP 800-4

Technical data

AXIS-FP 900-6

Size	Number of poles	Voltage [V / 50 Hz]	Model	Installed motor power Ny [kW]	RPM [min⁻¹]	Number of blades	Blade setting angle [°]	Weight [kg]	Lenght L [mm]	Curve number on graph
900	6	3~400	Axis-FP 900-6D/0.75-8/20/AL	0.75	960	8	20	120.8	400	①
			Axis-FP 900-6D/1.1-8/25/AL	1.1	960	8	25	124.8	400	②
			Axis-FP 900-6D/1.5-8/30/AL	1.5	960	8	30	127.8	500	③
			Axis-FP 900-6D/1.5-8/32.5/AL	1.5	960	8	32.5	127.8	500	④
			Axis-FP 900-6D/2.2-8/35/AL	2.2	960	8	35	138.8	500	⑤
			Axis-FP 900-6D/2.2-8/37.5/AL	2.2	960	8	37.5	138.8	500	⑥
			Axis-FP 900-6D/2.2-8/40/AL	2.2	960	8	40	138.8	500	⑦
			Axis-FP 900-6D/3-8/45/AL	3	960	8	45	152.8	500	⑧

Aerodynamic characteristics

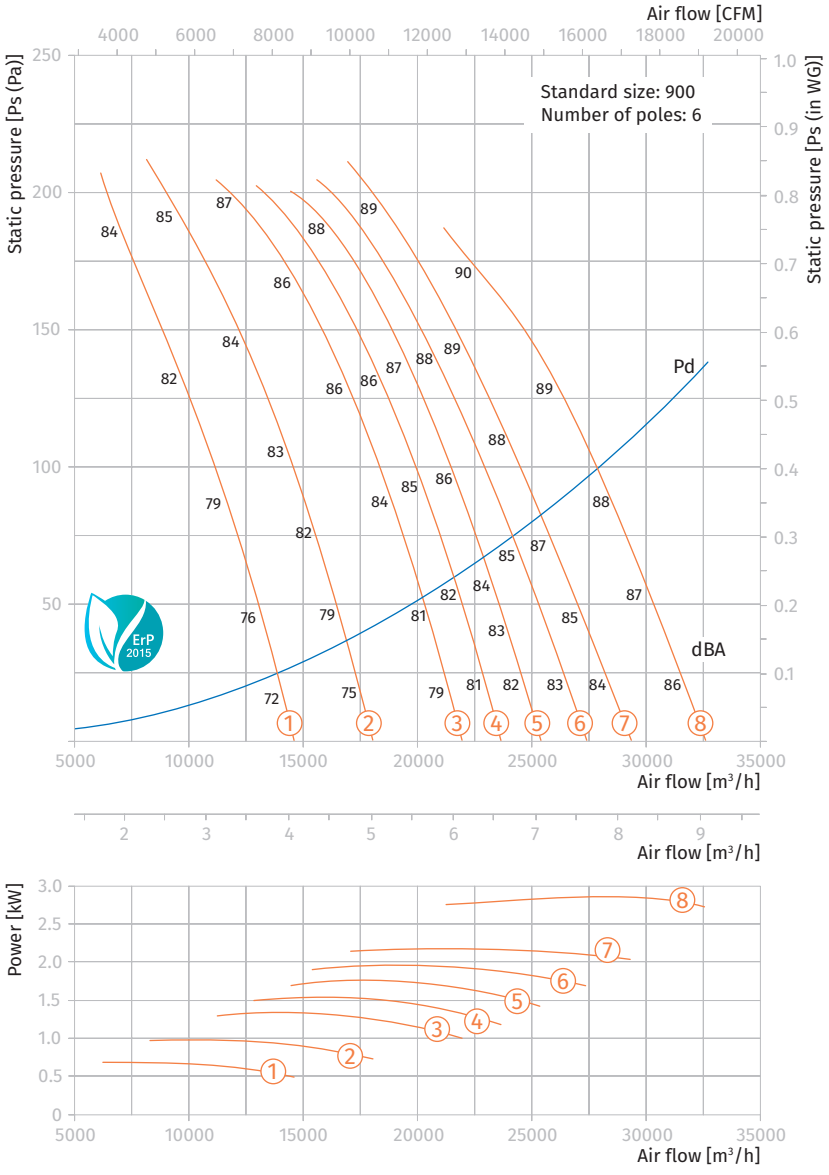

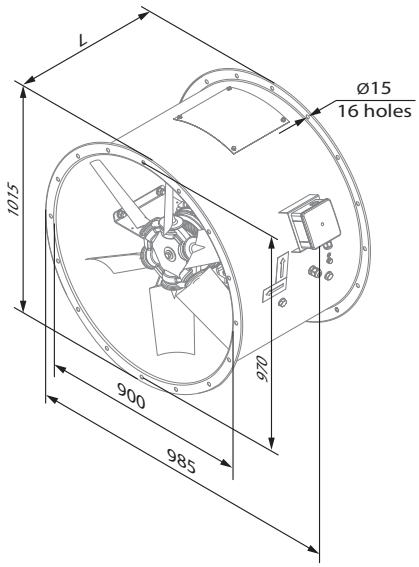

Axis-FP 900-6

AXIS-FP 900

Technical data

AXIS-FP 900-4

Size	Number of poles	Voltage [V / 50 Hz]	Model	Installed motor power Ny [kW]	RPM [min⁻¹]	Number of blades	Blade setting angle [°]	Weight [kg]	Lenght L [mm]	Curve number on graph
900	4	3~400	Axis-FP 900-4D/3-8/20/AL	3	1440	8	20	133.8	400	①
			Axis-FP 900-4D/4-8/25/AL	4	1440	8	25	147.8	500	②
			Axis-FP 900-4D/5.5-8/30/AL	5.5	1440	8	30	161.8	500	③
			Axis-FP 900-4D/5.5-8/32.5/AL	5.5	1440	8	32.5	161.8	500	④
			Axis-FP 900-4D/7.5-8/35/AL	7.5	1440	8	35	169.8	600	⑤
			Axis-FP 900-4D/7.5-8/37.5/AL	7.5	1440	8	37.5	169.8	600	⑥
			Axis-FP 900-4D/7.5-8/40/AL	7.5	1440	8	40	169.8	600	⑦
			Axis-FP 900-4D/11-8/45/AL	11.0	1440	8	45	206.8	600	⑧
900	4/8	3~400	Axis-FP 900-4/8D/2.8/0.7-8/20/AL	2.8/0.7	1440/720	8	20	133.8	500	①*
			Axis-FP 900-4/8D/3.8/1-8/25/AL	3.8/1	1440/720	8	25	143.8	500	②*
			Axis-FP 900-4/8D/5/1.3-8/30/AL	5/1.3	1440/720	8	30	168.8	600	③*
			Axis-FP 900-4/8D/7.2/1.8-8/32.5/AL	7.2/1.8	1440/720	8	32.5	180.8	600	④*
			Axis-FP 900-4/8D/7.2/1.8-8/35/AL	7.2/1.8	1440/720	8	35	180.8	600	⑤*
			Axis-FP 900-4/8D/7.2/1.8-8/37.5/AL	7.2/1.8	1440/720	8	37.5	180.8	600	⑥*
			Axis-FP 900-4/8D/11/3-8/40/AL	11/3	1440/720	8	40	219.8	700	⑦*
			Axis-FP 900-4/8D/11/3-8/45/AL	11/3	1440/720	8	45	219.8	700	⑧*

* maximum speed graph

Aerodynamic characteristics

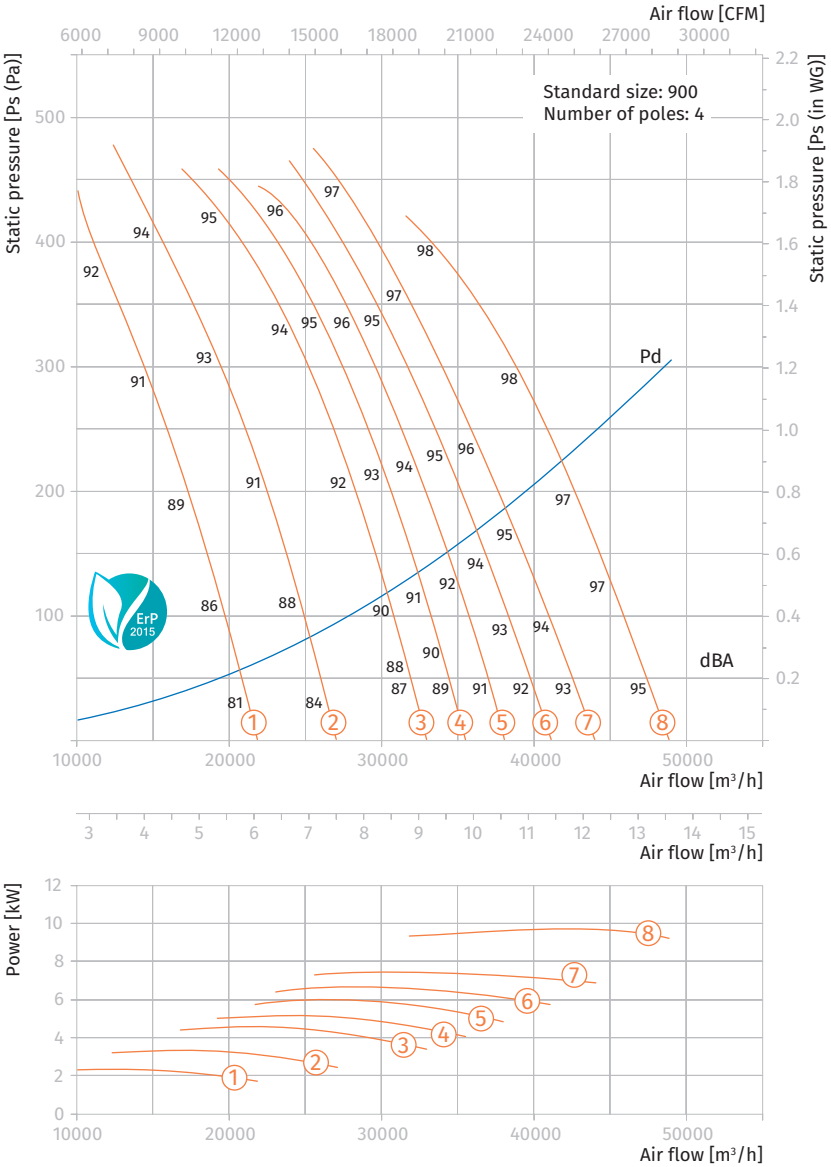

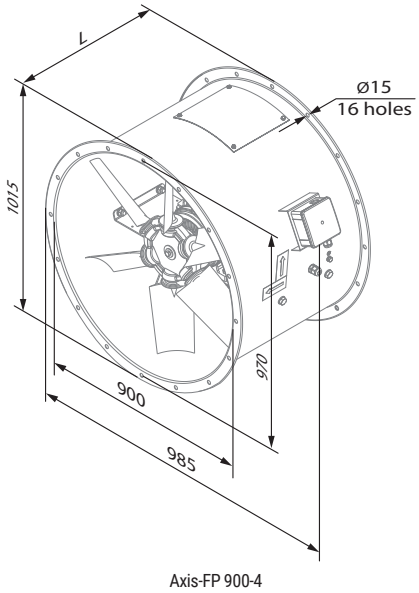

Axis-FP 900-4

Technical data

AXIS-FP 1000-6

Size	Number of poles	Voltage [V / 50 Hz]	Model	Installed motor power Ny [kW]	RPM [min⁻¹]	Number of blades	Blade setting angle [°]	Weight [kg]	Lenght L [mm]	Curve number on graph
1000	6	3~400	Axis-FP 1000-6D/1.5-8/25/AL	1.5	960	8	25	165.5	550	①
			Axis-FP 1000-6D/2.2-8/30/AL	2.2	960	8	30	176.5	550	②
			Axis-FP 1000-6D/2.2-8/32.5/AL	2.2	960	8	32.5	176.5	550	③
			Axis-FP 1000-6D/3-8/35/AL	3	960	8	35	190.5	650	④
			Axis-FP 1000-6D/3-8/37.5/AL	3	960	8	37.5	190.5	650	⑤
			Axis-FP 1000-6D/4-8/40/AL	4	960	8	40	204.5	650	⑥
			Axis-FP 1000-6D/5.5-8/45/AL	5.5	960	8	45	211.5	650	⑦
			Axis-FP 1000-6D/5.5-8/50/AL	5.5	960	8	50	211.5	650	⑧

Aerodynamic characteristics

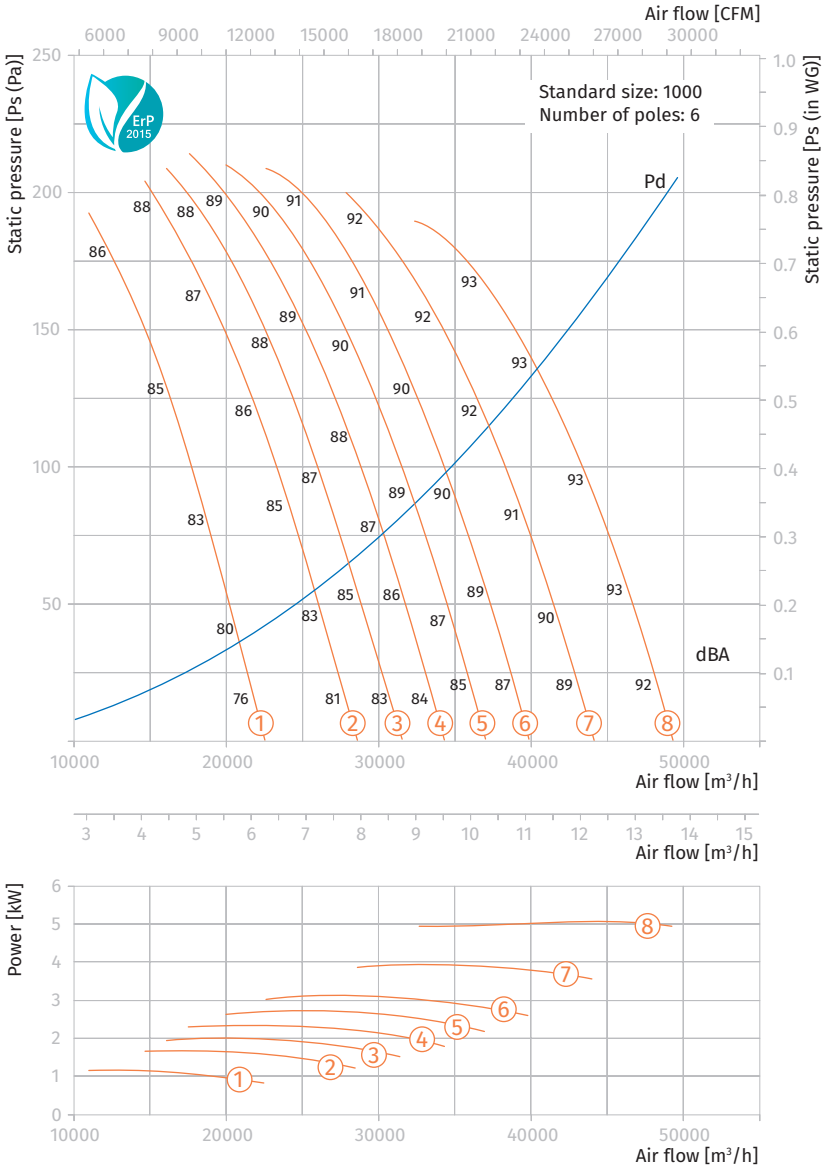

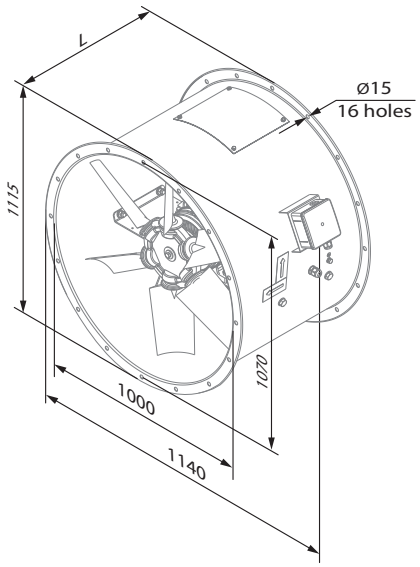

Axis-FP 1000-6

Technical data

AXIS-FP 1000-4

Size	Number of poles	Voltage [V / 50 Hz]	Model	Installed motor power Ny [kW]	RPM [min⁻¹]	Number of blades	Blade setting angle [°]	Weight [kg]	Lenght L [mm]	Curve number on graph
1000	4	3~400	Axis-FP 1000-4D/5.5-8/25/AL	5.5	1440	8	25	199.5	550	①
			Axis-FP 1000-4D/7.5-8/30/AL	7.5	1440	8	30	207.5	650	②
			Axis-FP 1000-4D/7.5-8/32.5/AL	7.5	1440	8	32.5	207.5	650	③
			Axis-FP 1000-4D/9.2-8/35/AL	9.2	1440	8	35	226.5	650	④
			Axis-FP 1000-4D/11-8/37.5/AL	11	1440	8	37.5	244.5	750	⑤
			Axis-FP 1000-4D/11-8/40/AL	11	1440	8	40	244.5	750	⑥
			Axis-FP 1000-4D/15-8/45/AL	15	1440	8	45	259.5	750	⑦
			Axis-FP 1000-4D/18.5-8/50/AL	18.5	1440	8	50	312.5	850	⑧
1000	4/8	3~400	Axis-FP 1000-4/8D/5/1.3-8/25/AL	5/1.3	1440/720	8	25	206.5	550	①*
			Axis-FP 1000-4/8D/7.2/1.8-8/30/AL	7.2/1.8	1440/720	8	30	218.5	650	②*
			Axis-FP 1000-4/8D/7.2/1.8-8/32.5/AL	7.2/1.8	1440/720	8	32.5	218.5	650	③*
			Axis-FP 1000-4/8D/11/3-8/35/AL	11/3	1440/720	8	35	257.5	650	④*
			Axis-FP 1000-4/8D/11/3-8/37.5/AL	11/3	1440/720	8	37.5	257.5	750	⑤*
			Axis-FP 1000-4/8D/11/3-8/40/AL	11/3	1440/720	8	40	257.5	750	⑥*
			Axis-FP 1000-4/8D/14/3.5-8/45/AL	14/3.5	1440/720	8	45	273.5	750	⑦*
			Axis-FP 1000-4/8D/17/4.3-8/50/AL	17/4.3	1440/720	8	50	273.5	850	⑧*

* maximum speed graph

Aerodynamic characteristics

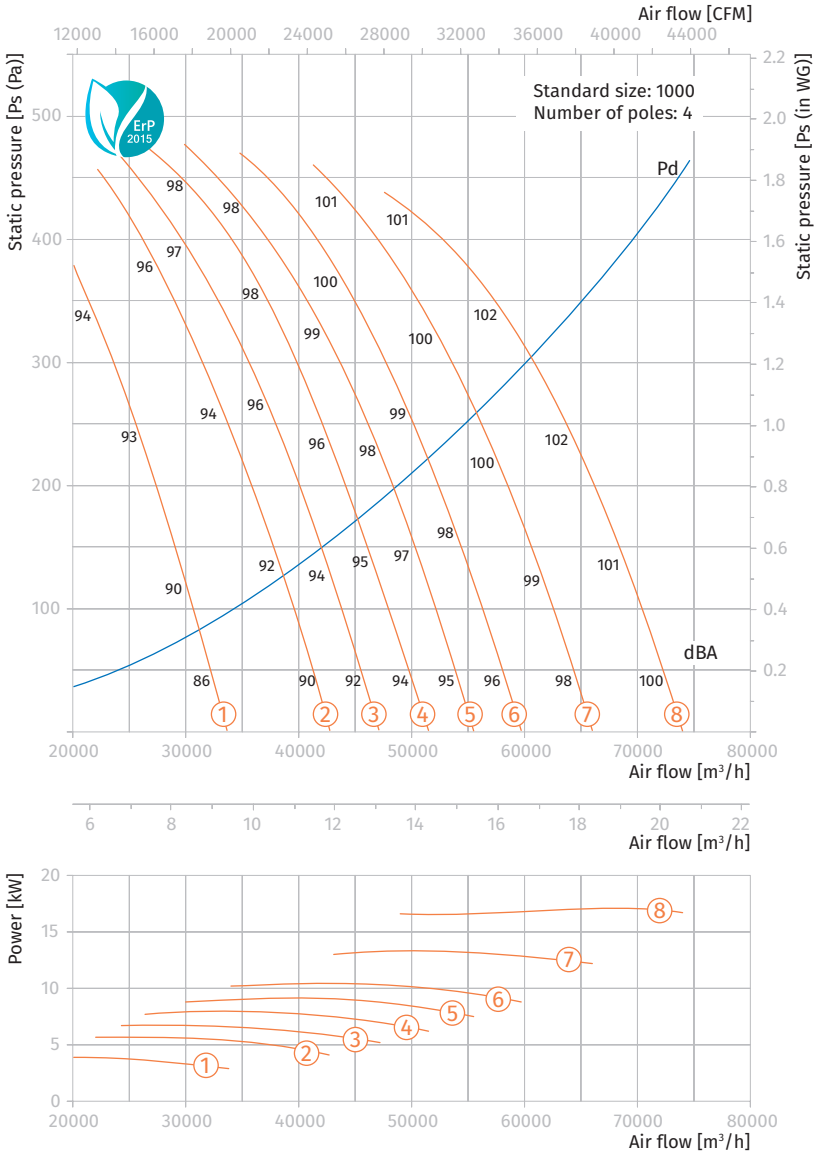

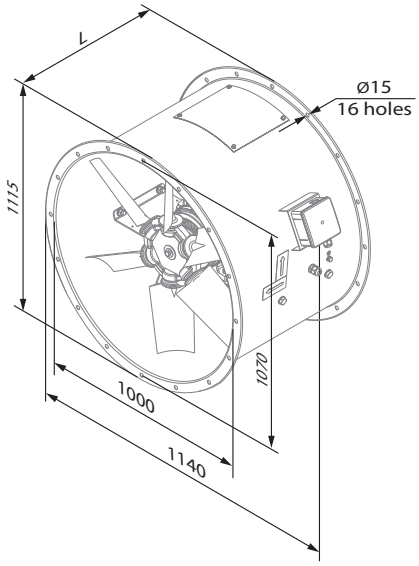

Axis-FP 1000-4

Technical data

AXIS-FP 1120-6

Size	Number of poles	Voltage [V / 50 Hz]	Model	Installed motor power Ny [kW]	RPM [min⁻¹]	Number of blades	Blade setting angle [°]	Weight [kg]	Lenght L [mm]	Curve number on graph
1120	6	3~400	Axis-FP 1120-6D/2.2-8/25/AL	2.2	960	8	25	195.5	550	①
			Axis-FP 1120-6D/3-8/30/AL	3	960	8	30	209.5	650	②
			Axis-FP 1120-6D/4-8/32.5/AL	4	960	8	32.5	223.5	650	③
			Axis-FP 1120-6D/4-8/35/AL	4	960	8	35	223.5	650	④
			Axis-FP 1120-6D/5.5-8/37.5/AL	5.5	960	8	37.5	230.5	650	⑤
			Axis-FP 1120-6D/5.5-8/40/AL	5.5	960	8	40	230.5	650	⑥
			Axis-FP 1120-6D/7.5-8/45/AL	7.5	960	8	45	262.5	750	⑦
			Axis-FP 1120-6D/9.2-8/50/AL	9.2	960	8	50	274.5	750	⑧

Aerodynamic characteristics

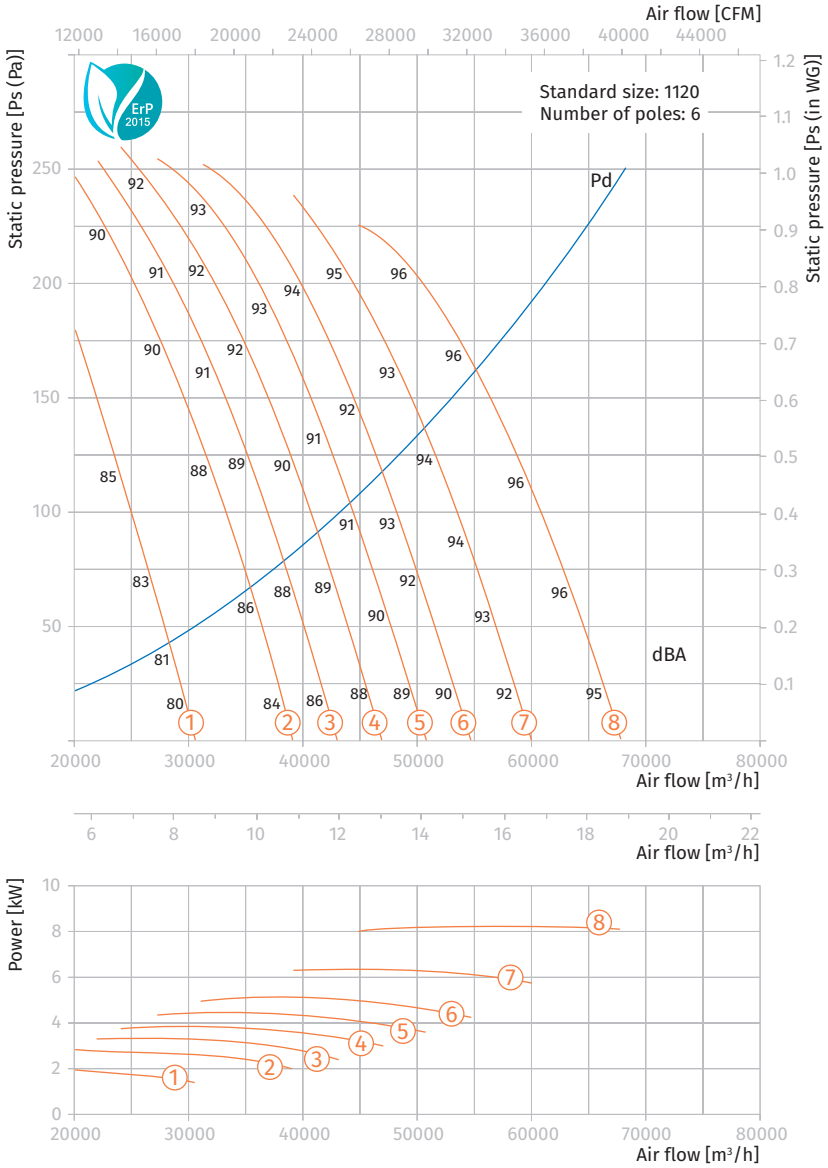

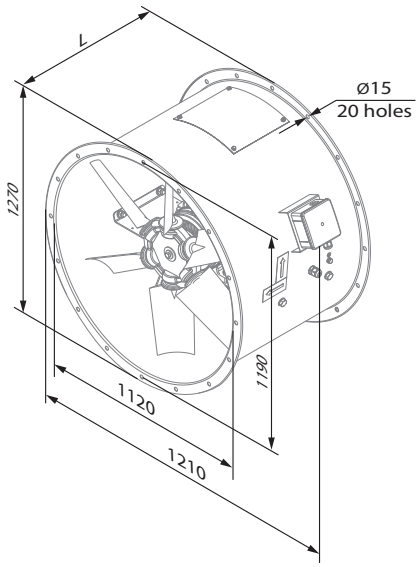

Axis-FP 1120-6

AXIS-FP 1120

Technical data

AXIS-FP 1120-4

Size	Number of poles	Voltage [V / 50 Hz]	Model	Installed motor power Ny [kW]	RPM [min⁻¹]	Number of blades	Blade setting angle [°]	Weight [kg]	Lenght L [mm]	Curve number on graph
1120	4	3~400	Axis-FP 1120-4D/7.5-8/25/AL	7.5	1440	8	25	226.5	650	①
			Axis-FP 1120-4D/11-8/30/AL	11	1440	8	30	263.5	750	②
			Axis-FP 1120-4D/11-8/32.5/AL	11	1440	8	32.5	263.5	750	③
			Axis-FP 1120-4D/15-8/35/AL	15	1440	8	35	278.5	750	④
			Axis-FP 1120-4D/18.5-8/37.5/AL	18.5	1440	8	37.5	331.5	850	⑤
			Axis-FP 1120-4D/18.5-8/40/AL	18.5	1440	8	40	331.5	850	⑥
			Axis-FP 1120-4D/22-8/45/AL	22	1440	8	45	342.5	850	⑦
1120	4/8	3~400	Axis-FP 1120-4/8D/7.2/1.8-8/25/AL	7.2/1.8	1440/720	8	25	237.5	650	①*
			Axis-FP 1120-4/8D/11/3-8/30/AL	11/3	1440/720	8	30	276.5	750	②*
			Axis-FP 1120-4/8D/11/3-8/32.5/AL	11/3	1440/720	8	32.5	276.5	750	③*
			Axis-FP 1120-4/8D/14/3.5-8/35/AL	14/3.5	1440/720	8	35	292.5	750	④*
			Axis-FP 1120-4/8D/17/4.3-8/37.5/AL	17/4.3	1440/720	8	37.5	319.5	850	⑤*
			Axis-FP 1120-4/8D/20/5-8/40/AL	20/5	1440/720	8	40	334.5	850	⑥*
			Axis-FP 1120-4/8D/28/6.5-8/45/AL	28/6.5	1440/720	8	45	392.5	850	⑦*

* maximum speed graph

Aerodynamic characteristics

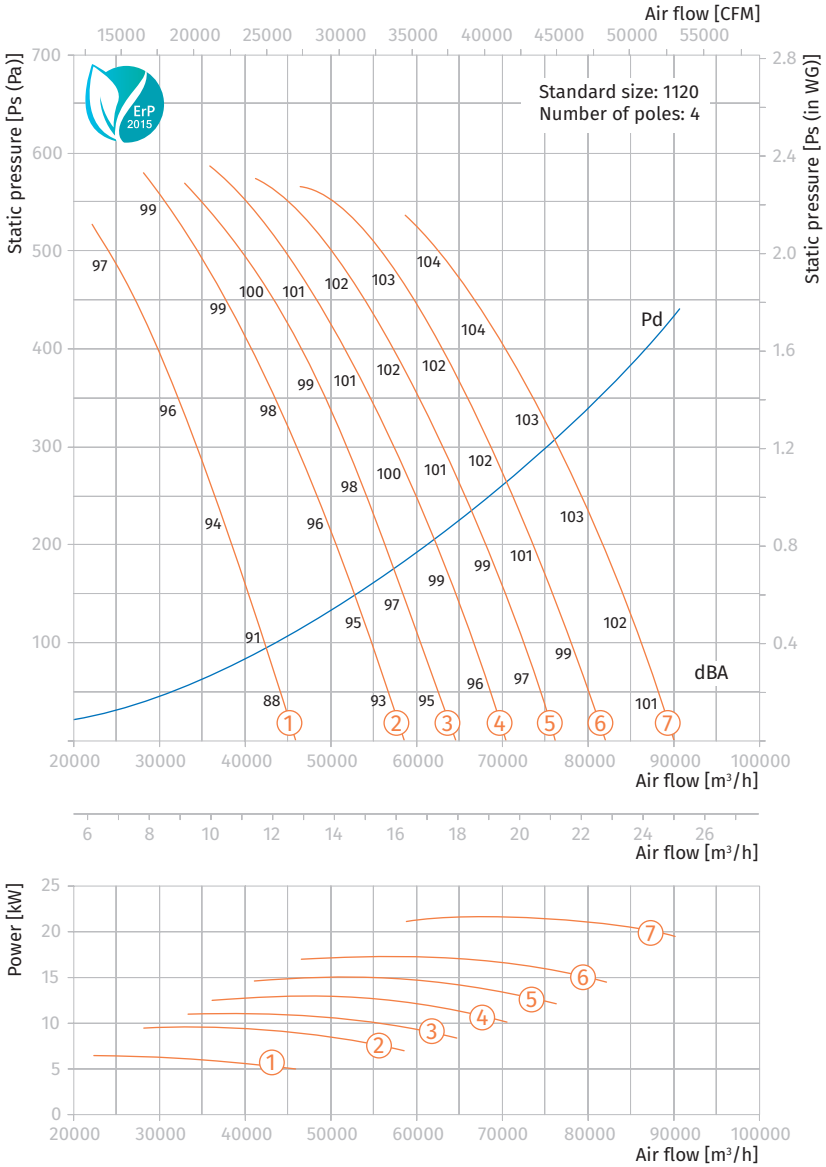

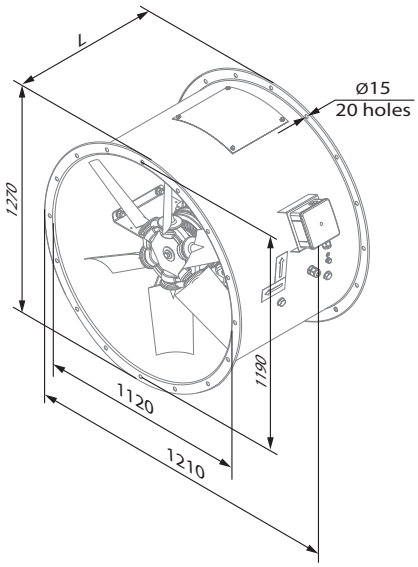

Axis-FP 1120-4

Technical data

AXIS-FP 1250-6

Size	Number of poles	Voltage [V / 50 Hz]	Model	Installed motor power Ny [kW]	RPM [min⁻¹]	Number of blades	Blade setting angle [°]	Weight [kg]	Lenght L [mm]	Curve number on graph
1250	6	3~400	Axis-FP 1250-6D/2.2-8/25/AL	2.2	960	8	25	214.5	550	①
			Axis-FP 1250-6D/3-8/30/AL	3	960	8	30	228.5	650	②
			Axis-FP 1250-6D/4-8/32.5/AL	4	960	8	32.5	242.5	650	③
			Axis-FP 1250-6D/5.5-8/35/AL	5.5	960	8	35	249.5	650	④
			Axis-FP 1250-6D/5.5-8/37.5/AL	5.5	960	8	37.5	249.5	650	⑤
			Axis-FP 1250-6D/7.5-8/40/AL	7.5	960	8	40	281.5	750	⑥
			Axis-FP 1250-6D/9.2-8/45/AL	9.2	960	8	45	293.5	750	⑦
			Axis-FP 1250-6D/11-8/50/AL	11	960	8	50	306.5	750	⑧

Aerodynamic characteristics

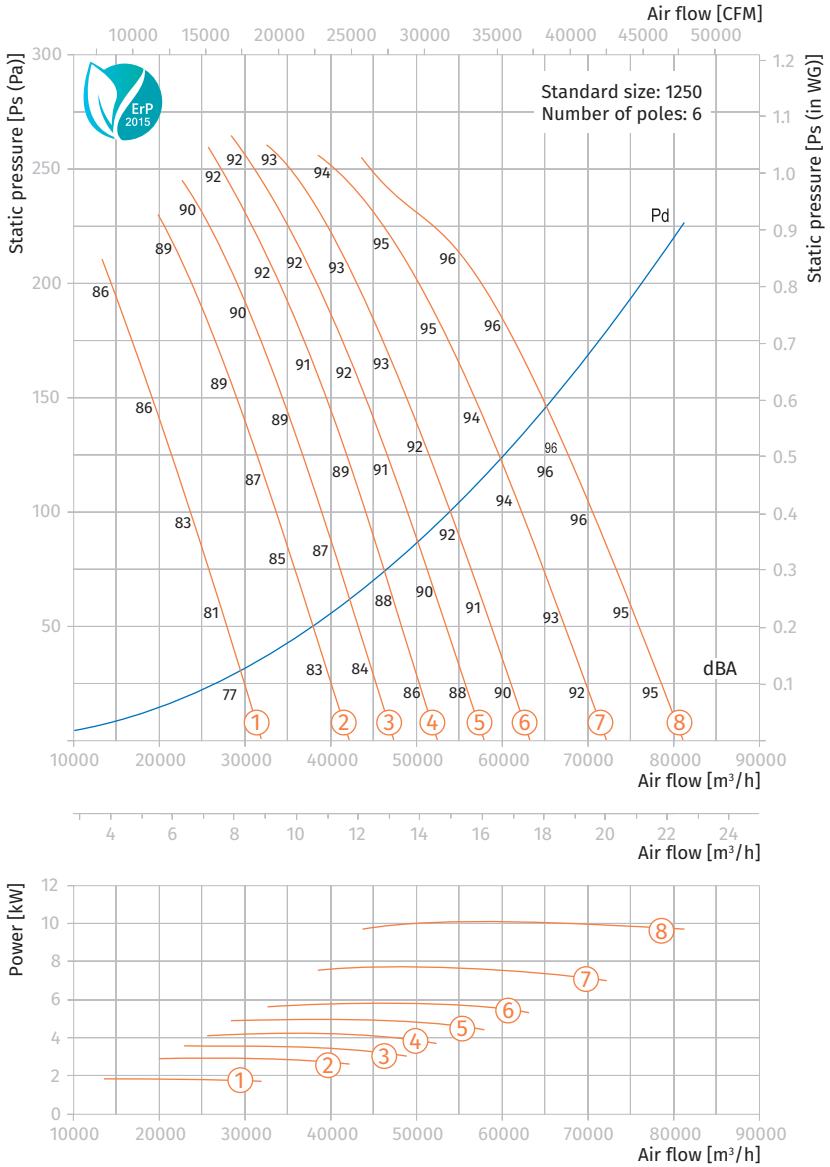

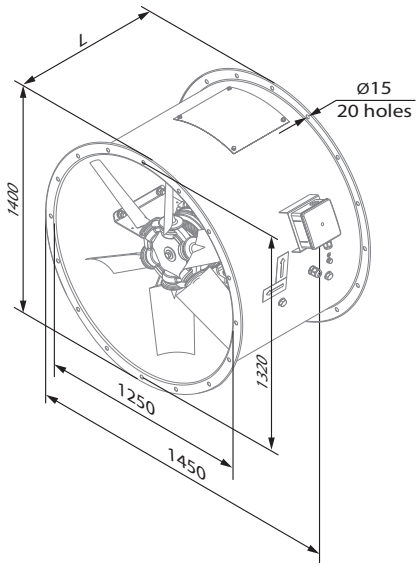

Axis-FP 1250-6

AXIS-FP 1250

Technical data

AXIS-FP 1250-4

Size	Number of poles	Voltage [V / 50 Hz]	Model	Installed motor power Ny [kW]	RPM [min⁻¹]	Number of blades	Blade setting angle [°]	Weight [kg]	Lenght L [mm]	Curve number on graph
1250	4	3~400	Axis-FP 1250-4D/7.5-8/25/AL	7.5	1440	8	25	245.5	650	①
			Axis-FP 1250-4D/11-8/30/AL	11	1440	8	30	282.5	750	②
			Axis-FP 1250-4D/15-8/32.5/AL	15	1440	8	32.5	297.5	750	③
			Axis-FP 1250-4D/15-8/35/AL	15	1440	8	35	297.5	750	④
			Axis-FP 1250-4D/18.5-8/37.5/AL	18.5	1440	8	37.5	350.5	850	⑤
			Axis-FP 1250-4D/22-8/40/AL	22	1440	8	40	361.5	850	⑥
			Axis-FP 1250-4D/30-8/45/AL	30	1440	8	45	424.5	850	⑦
1250	4/8	3~400	Axis-FP 1250-4/8D/7.2/1.8-8/25/AL	7.2/1.8	1440/720	8	25	256.5	650	①*
			Axis-FP 1250-4/8D/11/3-8/30/AL	11/3	1440/720	8	30	295.5	750	②*
			Axis-FP 1250-4/8D/14/3.5-8/32.5/AL	14/3.5	1440/720	8	32.5	311.5	750	③*
			Axis-FP 1250-4/8D/14/3.5-8/35/AL	14/3.5	1440/720	8	35	311.5	750	④*
			Axis-FP 1250-4/8D/17/4.3-8/37.5/AL	17/4.3	1440/720	8	37.5	338.5	850	⑤*
			Axis-FP 1250-4/8D/20/5-8/40/AL	20/5	1440/720	8	40	353.5	850	⑥*
			Axis-FP 1250-4/8D/28/6.5-8/45/AL	28/6.5	1440/720	8	45	411.5	850	⑦*

* maximum speed graph

Aerodynamic characteristics

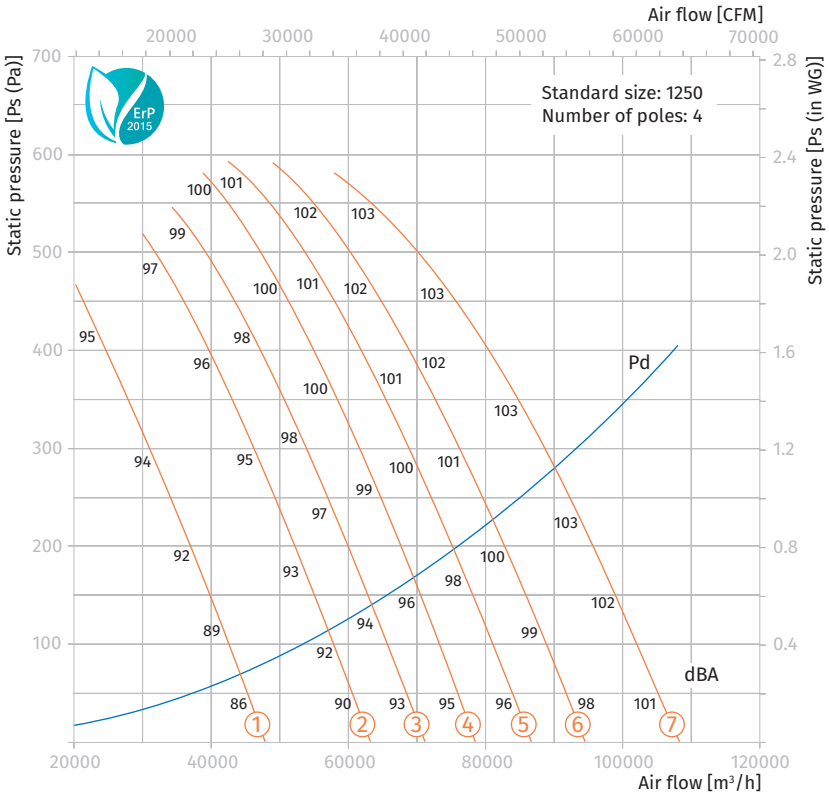

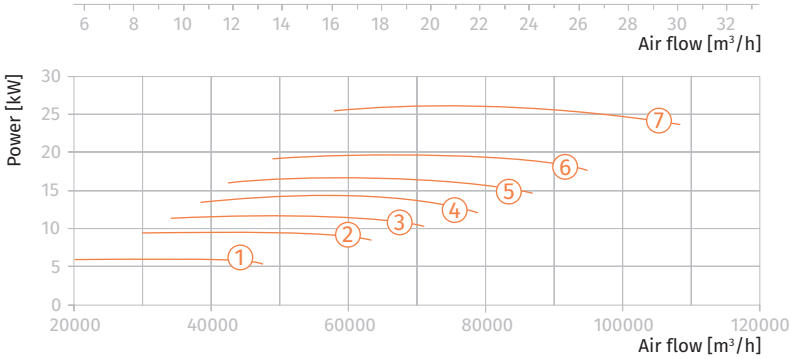

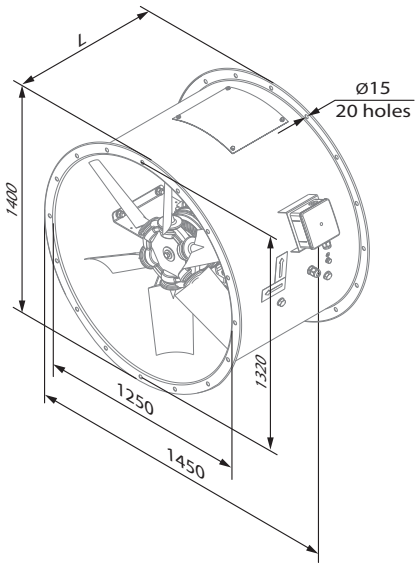

Axis-FP 1250-4

Fan accessories selection table

Fan		Ø 400	Ø 450	Ø 500	Ø 560	Ø 630
Carrier	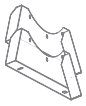	O-AF-400	O-AF-450	O-AF-500	O-AF-560	O-AF-630
Flange	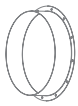	F-AF-400	F-AF-450	F-AF-500	F-AF-560	F-AF-630
Flexible joint	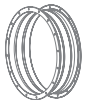	EVAF-AF-400	EVAF-AF-450	EVAF-AF-500	EVAF-AF-560	EVAF-AF-630
Fire-resistant flexible joint up to 400°C	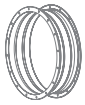	EVAF-AF-400-400/2	EVAF-AF-450-400/2	EVAF-AF-500-400/2	EVAF-AF-560-400/2	EVAF-AF-630-400/2
Hood	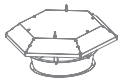	Z-AF-400	Z-AF-450	Z-AF-500	Z-AF-560	Z-AF-630
Roof adapter	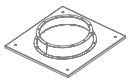	PK-AF-400	PK-AF-450	PK-AF-500	PK-AF-560	PK-AF-630
Mounting curb	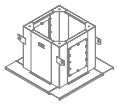	SM-AF 400-450	SM-AF 400-450	SM-AF 500	SM-AF 560-630	SM-AF 560-630
Inlet cone	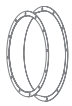	VK-AF-400	VK-AF-450	VK-AF-500	VK-AF-560	VK-AF-630
Backdraft damper		VRV-AF-400	VRV-AF-450	VRV-AF-500	VRV-AF-560	VRV-AF-630
Fire-resistant backdraft damper up to 400 °C		VRV-AF-400-400/2	VRV-AF-450-400/2	VRV-AF-500-400/2	VRV-AF-560-400/2	VRV-AF-630-400/2
Backdraft damper		VRV1-AF-400	VRV1-AF-450	VRV1-AF-500	VRV1-AF-560	VRV1-AF-630
Silencer SD		SD-400-1D	SD-450-1D	SD-500-1D	SD-560-1D	SD-630-1D
		SD-400-1.5D	SD-450-1.5D	SD-500-1.5D	SD-560-1.5D	SD-630-1.5D
		SD-400-2D	SD-450-2D	SD-500-2D	SD-560-2D	SD-630-2D
Silencer SDV		SDV-400-1D	SDV-450-1D	SDV-500-1D	SDV-560-1D	SDV-630-1D
		SDV-400-1.5D	SDV-450-1.5D	SDV-500-1.5D	SDV-560-1.5D	SDV-630-1.5D
		SDV-400-2D	SDV-450-2D	SDV-500-2D	SDV-560-2D	SDV-630-2D
Protective mesh	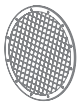	SZ-AF-400	SZ-AF-450	SZ-AF-500	SZ-AF-560	SZ-AF-630
Spring-loaded antivibration mount	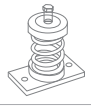	SIF-AF*	SIF-AF*	SIF-AF*	SIF-AF*	SIF-AF*
Rubber antivibration mount		SIG-AF*	SIG-AF*	SIG-AF*	SIG-AF*	SIG-AF*

* selection according to the fan weight

Fan		Ø 710	Ø 800	Ø 900	Ø 1000	Ø 1120	Ø 1250
Carrier	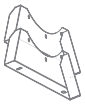	O-AF-710	O-AF-800	O-AF-900	O-AF-1000	O-AF-1120	O-AF-1250
Flange	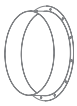	F-AF-710	F-AF-800	F-AF-900	F-AF-1000	F-AF-1120	F-AF-1250
Flexible joint	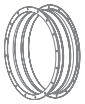	EVAF-AF-710	EVAF-AF-800	EVAF-AF-900	EVAF-AF-1000	EVAF-AF-1120	EVAF-AF-1250
Fire-resistant flexible joint up to 400°C	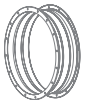	EVAF-AF-710-400/2	EVAF-AF-800-400/2	EVAF-AF-900-400/2	EVAF-AF-1000-400/2	EVAF-AF-1120-400/2	EVAF-AF-1250-400/2
Hood	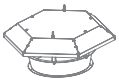	Z-AF-710	Z-AF-800	Z-AF-900	Z-AF-1000	Z-AF-1120	Z-AF-1250
Roof adapter	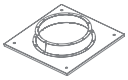	PK-AF-710	PK-AF-800	PK-AF-900	PK-AF-1000	PK-AF-1120	PK-AF-1250
Mounting curb	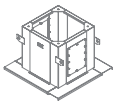	SM-AF 710-800	SM-AF 710-800	SM-AF 900	SM-AF 1000-1120	SM-AF 1000-1120	SM-AF 1250
Inlet cone	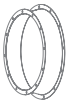	VK-AF-710	VK-AF-800	VK-AF-900	VK-AF-1000	VK-AF-1120	VK-AF-1250
Backdraft damper		VRV-AF-710	VRV-AF-800	VRV-AF-900	VRV-AF-1000	VRV-AF-1120	VRV-AF-1250
Fire-resistant backdraft damper up to 400 °C		VRV-AF-710-400/2	VRV-AF-800-400/2	VRV-AF-900-400/2	VRV-AF-1000-400/2	VRV-AF-1120-400/2	VRV-AF-1250-400/2
Backdraft damper	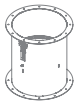	VRV1-AF-710	VRV1-AF-800	VRV1-AF-900	VRV1-AF-1000	VRV1-AF-1120	VRV1-AF-1250
Silencer SD		SD-710-1D	SD-800-1D	SD-900-1D	SD-1000-1D	SD-1120-1D	SD-1250-1D
		SD-710-1.5D	SD-800-1.5D	SD-900-1.5D	SD-1000-1.5D	SD-1120-1.5D	SD-1250-1.5D
		SD-710-2D	SD-800-2D	SD-900-2D	SD-1000-2D	SD-1120-2D	SD-1120-2D
Silencer SDV		SDV-710-1D	SDV-800-1D	SDV-900-1D	SDV-1000-1D	SDV-1120-1D	SDV-1250-1D
		SDV-710-1.5D	SDV-800-1.5D	SDV-900-1.5D	SDV-1000-1.5D	SDV-1120-1.5D	SDV-1250-1.5D
		SDV-710-2D	SDV-800-2D	SDV-900-2D	SDV-1000-2D	SDV-1120-2D	SDV-1120-2D
Protective mesh	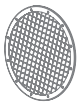	SZ-AF-710	SZ-AF-800	SZ-AF-900	SZ-AF-1000	SZ-AF-1120	SZ-AF-1250
Spring-loaded antivibration mount		SIF-AF*	SIF-AF*	SIF-AF*	SIF-AF*	SIF-AF*	SIF-AF*
Rubber antivibration mount		SIG-AF*	SIG-AF*	SIG-AF*	SIG-AF*	SIG-AF*	SIG-AF*

* selection according to the fan weight

CARRIER O-AF

- Used for mounting the fans to the floor, walls or ceiling.
- The carrier consists of two brackets. The unit is made of steel with a polymer coating.

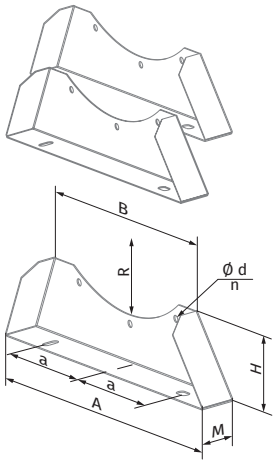

Model	Dimensions [mm]								
	A	B	H	M	a	R	Ø d	n	Weight [kg]
O-AF-400	510	395	115	45	160	225	8	4	1.15
O-AF-450	560	435	125	45	180	250	8	4	1.3
O-AF-500	610	480	130	45	200	280	12	4	1.4
O-AF-560	670	525	140	45	230	310	12	4	1.6
O-AF-630	740	575	150	45	255	345	12	4	1.8
O-AF-710	820	630	160	45	280	385	12	5	2.0
O-AF-800	910	705	180	45	315	430	12	5	2.35
O-AF-900	1020	795	215	52	360	485	15	5	6.3
O-AF-1000	1120	875	235	52	400	535	15	5	7.2
O-AF-1120	1240	1002	270	52	460	595	15	6	9.1
O-AF-1250	1370	1087	285	52	510	660	15	6	10.25

FLANGE F-AF

- Enables attaching round ducts of appropriate size to the fan.
- The unit is made of steel with a polymer coating.

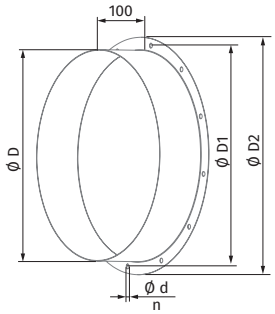

Model	Dimensions [mm]					
	Ø D	Ø D1	Ø D2	Ø d	n	Weight [kg]
F-AF-400	400	450	490	8	12	2.26
F-AF-450	450	500	540	8	12	2.53
F-AF-500	500	560	600	12	12	2.9
F-AF-560	560	620	660	12	12	3.24
F-AF-630	630	690	730	12	12	3.63
F-AF-710	710	770	810	12	16	4.08
F-AF-800	800	860	900	12	16	4.58
F-AF-900	900	970	1015	15	16	5.41
F-AF-1000	1000	1070	1115	15	16	6.0
F-AF-1120	1120	1190	1270	15	20	7.51
F-AF-1250	1250	1320	1400	15	20	8.36

FLEXIBLE JOINT EVAF-AF
FIRE-RESISTANT FLEXIBLE JOINT EVAF-AF...400/2

- Flexible joints cancel out any potential vibrations transmitted by the fans or air handling units to the air ducting as well as partially compensate for the air duct assembly deformations caused by temperature variation.
- The flexible joints are formed by two flanges joined with vibration-cancelling material and are made of polymer-coated steel and PVC tape reinforced with polyamide fabric. The joints are not intended to withstand any significant mechanical loads and, therefore, may not be used as load-bearing structures.
- The **EVAF-AF...400/2** joints are designed for operation at a temperature of 400 °C for 2 hours.

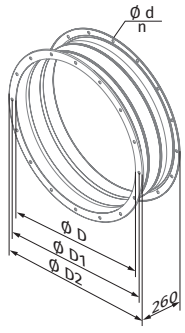

Model		Dimensions [mm]					
		Ø D	Ø D1	Ø D2	Ø d	n	Weight [kg]
EVAF-AF-400	EVAF-AF-400-400/2	400	450	490	8	12	4.76
EVAF-AF-450	EVAF-AF-450-400/2	450	500	540	8	12	5.34
EVAF-AF-500	EVAF-AF-500-400/2	500	560	600	12	12	6.12
EVAF-AF-560	EVAF-AF-560-400/2	560	620	660	12	12	6.83
EVAF-AF-630	EVAF-AF-630-400/2	630	690	730	12	12	7.66
EVAF-AF-710	EVAF-AF-710-400/2	710	770	810	12	16	8.6
EVAF-AF-800	EVAF-AF-800-400/2	800	860	900	12	16	9.67
EVAF-AF-900	EVAF-AF-900-400/2	900	970	1015	15	16	11.4
EVAF-AF-1000	EVAF-AF-1000-400/2	1000	1070	1115	15	16	12.64
EVAF-AF-1120	EVAF-AF-1120-400/2	1120	1190	1270	15	20	15.73
EVAF-AF-1250	EVAF-AF-1250-400/2	1250	1320	1400	15	20	17.52

HOOD Z-AF

- Ensures trouble-free operation of fans on rooftops.
- The unit is made of steel with a polymer coating.

Model	Dimensions [mm]									
	Ø D	Ø D1	Ø D2	Ø d	n	H	H1	A	B	Weight [kg]
Z-AF-400	400	450	490	8	12	265	301	672	774	10.15
Z-AF-450	450	500	540	8	12	280	326	742	855	12.23
Z-AF-500	500	560	600	12	12	320	367	790	910	13.88
Z-AF-560	560	620	660	12	12	335	382	860	991	15.95
Z-AF-630	630	690	730	12	12	360	406	988	1139	27.25
Z-AF-710	710	770	810	12	16	420	466	1072	1236	36.54
Z-AF-800	800	860	900	12	16	478	536	1190	1371	47.42
Z-AF-900	900	970	1015	15	16	527	582	1346	1551	69.09
Z-AF-1000	1000	1070	1115	15	16	655	710	1552	1789	99.81
Z-AF-1120	1120	1190	1270	15	20	670	725	1707	1968	118
Z-AF-1250	1250	1320	1400	15	20	700	755	1845	2128	136

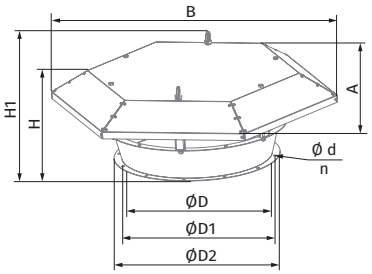

ROOF ADAPTER PK-AF

- The unit is used for mounting **Axis-P** on rooftops.
- The unit is made of steel with a polymer coating.

Model	Dimensions [mm]													
	Ø D	Ø D1	Ø D2	Ø d	n	Ø F	Ø F1	Ø F2	Ø d1	n1	A	B	H	Weight [kg]
PK-AF-400	400	450	490	8	12	450	500	540	8	12	580	701	115	7.2
PK-AF-450	450	500	540	8	12	500	560	600	12	12	580	701	130	7.5
PK-AF-500	500	560	600	12	12	560	620	660	12	12	640	770	140	10.3
PK-AF-560	560	620	660	12	12	630	690	730	12	12	750	920	155	14.2
PK-AF-630	630	690	730	12	12	710	770	810	12	16	750	920	170	15.1
PK-AF-710	710	770	810	12	16	800	860	900	12	16	980	1150	210	27.7
PK-AF-800	800	860	900	12	16	900	970	1015	15	16	980	1150	230	28.7
PK-AF-900	900	970	1015	15	16	1000	1070	1115	15	16	1050	1220	250	41.7
PK-AF-1000	1000	1070	1115	15	16	1120	1190	1270	15	20	1340	1510	280	72.5
PK-AF-1120	1120	1190	1270	15	20	1250	1320	1400	15	20	1340	1510	295	75.1
PK-AF-1250	1250	1320	1400	15	20	1400	1470	1550	15	20	1500	1700	325	91

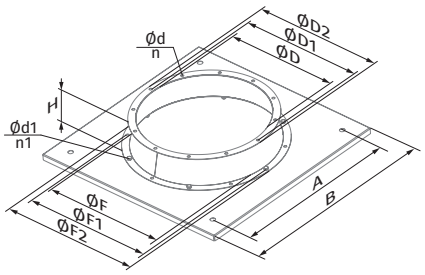

MOUNTING CURB SM-AF

- The mounting curb is designed to enable fan installation on rooftops.
- The unit is made of steel with a polymer coating. The outer frames are supported for installation on the roof. The mounting curb is equipped with a side inspection door.

Model	Dimensions [mm]				
	H	A	B	C	Weight [kg]
SM-AF-400-450	600	580	692	979	50.1
SM-AF-500	600	640	760	1047	53.7
SM-AF-560-630	600	750	910	1197	61.8
SM-AF-710-800	600	980	1140	1427	74.2
SM-AF-900	650	1050	1208	1495	81.3
SM-AF-1000-1120	750	1340	1498	1784	129.4
SM-AF-1250	750	1500	1688	1974	143.1

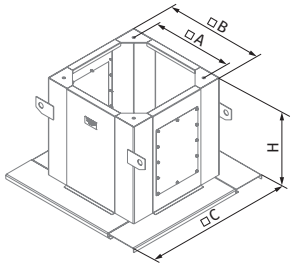

INLET CONE VK-AF

- The inlet cone is recommended to be installed upstream of the fan to improve the air flow parameters. However, it must be installed in the absence of ducting attached to the fan inlet. The inlet cone helps reduce the fan dynamic pressure and increase the static component of the total fan pressure. The unit can be used in combination with the **SZ-AF** protective mesh which must be one size larger than the unit.
- The unit has two flanges and is made of steel with a polymer coating.

Model	Dimensions [mm]											
	Ø D	Ø D1	Ø D2	Ø d	n	Ø F	Ø F1	Ø F2	H	Ø d1	n	Weight [kg]
VK-AF-400	400	450	490	8	12	450	500	540	95	8	12	2.7
VK-AF-450	450	500	540	8	12	500	560	600	110	12	12	3.3
VK-AF-500	500	560	600	12	12	560	620	660	120	12	12	4.0
VK-AF-560	560	620	660	12	12	630	690	730	135	12	12	4.65
VK-AF-630	630	690	730	12	12	710	770	810	150	12	16	6.8
VK-AF-710	710	770	810	12	16	800	860	900	170	12	16	12
VK-AF-800	800	860	900	12	16	900	970	1015	190	15	16	15
VK-AF-900	900	970	1015	15	16	1000	1070	1115	210	15	16	21
VK-AF-1000	1000	1070	1115	15	16	1120	1190	1270	240	15	20	36.7
VK-AF-1120	1120	1190	1270	15	20	1250	1320	1400	255	15	20	45
VK-AF-1250	1250	1320	1400	15	20	1400	1470	1550	285	15	20	53.5

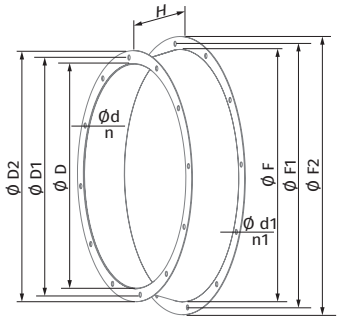

BACKDRAFT DAMPER VRV-AF
FIRE-RESISTANT BACKDRAFT DAMPER VRV-AF...400/2

- The backdraft damper with spring-loaded blades is used for shutoff of air flow in the air ducts and prevention of air backdraft during standstill of ventilation equipment. The damper blades are opened with the air pressure and closed with the spring.
- The damper placement in a ventilation system should account for the air flow direction. In case of a horizontal installation of the damper, the pivot axis of the blades must be true horizontal. A vertically installed damper is only suitable for air extraction duty. To aasemble the **Axis-FP** fans, use the **VRV-AF...400/2** dampers, which are designed to operate at a temperature of 400 °C for 2 hours.
- The unit casing and the two spring-loaded blades are made of polymer-coated steel.

Model		Dimensions [mm]						
		Ø D	Ø D1	Ø D2	Ø d	n	L	Weight [kg]
VRV-AF-400	VRV-AF-400-400/2	400	450	490	8	12	250	5.4
VRV-AF-450	VRV-AF-450-400/2	450	500	540	8	12	250	6.2
VRV-AF-500	VRV-AF-500-400/2	500	560	590	12	12	250	7.1
VRV-AF-560	VRV-AF-560-400/2	560	620	650	12	12	320	9.6
VRV-AF-630	VRV-AF-630-400/2	630	690	720	12	12	370	14.2
VRV-AF-710	VRV-AF-710-400/2	710	770	810	12	16	390	21.4
VRV-AF-800	VRV-AF-800-400/2	800	860	900	12	16	390	25.4
VRV-AF-900	VRV-AF-900-400/2	900	970	1010	15	16	450	32.6
VRV-AF-1000	VRV-AF-1000-400/2	1000	1070	1110	15	16	450	36.9
VRV-AF-1120	VRV-AF-1120-400/2	1120	1190	1260	15	20	540	59.5
VRV-AF-1250	VRV-AF-1250-400/2	1250	1320	1390	15	20	540	67.4

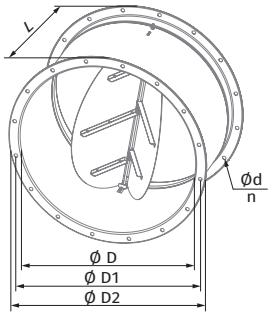

BACKDRAFT DAMPER VRV1-AF

- The backdraft damper with a gravity plate is used for supply pressurisation systems and designed for shutoff of air flow during standstill of ventilation equipment. The damper plate opens with the pressure created by the air flow and closes under its own weight, blocking the duct.
- The **VRV1-AF** damper is only suitable for air supply duty and must be installed in the vertical position.
- The damper is made from polymer coated steel and has a single blade which closes under its own weight.

Model	Dimensions [mm]						
	Ø D	Ø D1	Ø D2	Ø d	n	L	Weight [kg]
VRV1-AF-400	400	450	490	8	12	500	8.1
VRV1-AF-450	450	500	540	8	12	550	9.8
VRV1-AF-500	500	560	600	12	12	600	14.4
VRV1-AF-560	560	620	660	12	12	660	17.5
VRV1-AF-630	630	690	730	12	12	730	21.4
VRV1-AF-710	710	770	810	12	16	810	26.8
VRV1-AF-800	800	860	900	12	16	900	33.2
VRV1-AF-900	900	970	1015	15	16	1000	53.7
VRV1-AF-1000	1000	1070	1115	15	16	1100	65
VRV1-AF-1120	1120	1190	1270	15	20	1220	82.1
VRV1-AF-1250	1250	1320	1400	15	20	1350	100.3

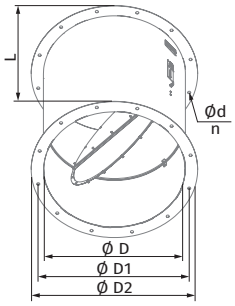

SILENCER SD

- The silencer is used for attenuation of the operation noise generated by ventilation equipment and spreaded in the the air ducts. Designed for connection to round air ducts.
- **SD** silencer has a polymer-coated steel casing filled with noncombustible material that has a protective coating to prevent fiber deformation.

Model			Dimensions [mm]								Weight [kg]		
			Ø D	Ø D1	Ø D2	L (1D)	L (1.5D)	L (2D)	Md	n	(1D)	(1.5D)	(2D)
SD-400-1D	SD-400-1.5D	SD-400-2D	400	450	515	402	602	802	M6	12	9.5	13.1	16.7
SD-450-1D	SD-450-1.5D	SD-450-2D	450	500	565	452	677	902	M6	12	11.6	16.2	20.8
SD-500-1D	SD-500-1.5D	SD-500-2D	500	560	615	502	752	1002	M10	12	13.9	19.5	25.4
SD-560-1D	SD-560-1.5D	SD-560-2D	560	620	675	562	842	1122	M10	12	17.2	24.5	31.5
SD-630-1D	SD-630-1.5D	SD-630-2D	630	690	745	632	947	1262	M10	12	20.5	29.3	38.1
SD-710-1D	SD-710-1.5D	SD-710-2D	710	770	825	712	1067	1422	M10	16	25.6	36.2	47.6
SD-800-1D	SD-800-1.5D	SD-800-2D	800	860	903	801	1202	1601	M10	16	32.3	46.3	65.2
SD-900-1D	SD-900-1.5D	SD-900-2D	900	970	1003	901	1382	1801	M10	16	40.2	57.8	80.4
SD-1000-1D	SD-1000-1.5D	SD-1000-2D	1000	1070	1120	1002	1502	2002	M10	16	54.4	79.0	109.0
SD-1120-1D	SD-1120-1.5D	SD-1120-2D	1120	1190	1273	1122	1682	2242	M12	20	70.2	101.0	141.4
SD-1250-1D	SD-1250-1.5D	SD-1250-2D	1250	1320	1410	1252	1877	2502	M12	20	86.3	124.8	172.6

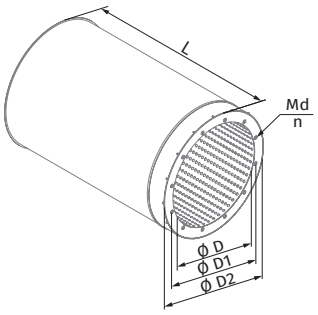

SILENCER SDV

- The silencer is used for attenuation of the operation noise generated by ventilation equipment and spreaded in the the air ducts. Designed for connection to round air ducts.
- **SDV** silencer has a polymer-coated steel casing filled with noncombustible material that has a protective coating to prevent fiber deformation. The silencer has an internal sound-absorbing element to increase sound attenuation efficiency.

Model			Dimensions [mm]								Weight [kg]		
			Ø D	Ø D1	Ø D2	L (1D)	L (1.5D)	L (2D)	Md	n	(1D)	(1.5D)	(2D)
SDV-400-1D	SDV-400-1.5D	SDV-400-2D	400	450	515	402	602	802	M6	12	14.0	19.0	24.0
SDV-450-1D	SDV-450-1.5D	SDV-450-2D	450	500	565	452	677	902	M6	12	17.0	22.0	27.0
SDV-500-1D	SDV-500-1.5D	SDV-500-2D	500	560	615	502	752	1002	M10	12	23.0	31.0	38.0
SDV-560-1D	SDV-560-1.5D	SDV-560-2D	560	620	675	562	842	1122	M10	12	27.0	35.0	46.0
SDV-630-1D	SDV-630-1.5D	SDV-630-2D	630	690	745	632	947	1262	M10	12	33.0	46.0	59.0
SDV-710-1D	SDV-710-1.5D	SDV-710-2D	710	770	825	712	1067	1422	M10	16	39.0	55.0	71.0
SDV-800-1D	SDV-800-1.5D	SDV-800-2D	800	860	903	801	1202	1601	M10	16	53.0	74.0	100.6
SDV-900-1D	SDV-900-1.5D	SDV-900-2D	900	970	1003	901	1382	1801	M10	16	63.0	84.0	126.0
SDV-1000-1D	SDV-1000-1.5D	SDV-1000-2D	1000	1070	1120	1002	1502	2002	M10	16	85.0	120.0	170.0
SDV-1120-1D	SDV-1120-1.5D	SDV-1120-2D	1120	1190	1273	1122	1682	2242	M12	20	105.0	148.0	210.0
SDV-1250-1D	SDV-1250-1.5D	SDV-1250-2D	1250	1320	1410	1252	1877	2502	M12	20	134.0	190.0	260.0

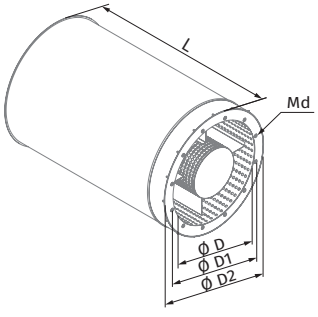

PROTECTIVE MESH SZ-AF

- Protects the fans against ingress of foreign objects.
- Protective mesh with 25x25 mm cells.

Model	Dimensions [mm]					
	Ø D	Ø D1	Ø D2	Ø d	n	Weight [kg]
SZ-AF-400	400	450	490	8	12	1.28
SZ-AF-450	450	500	540	8	12	1.45
SZ-AF-500	500	560	600	12	12	1.77
SZ-AF-560	560	620	660	12	12	2.0
SZ-AF-630	630	690	730	12	12	2.28
SZ-AF-710	710	770	810	12	16	2.59
SZ-AF-800	800	860	900	12	16	2.97
SZ-AF-900	900	970	1015	15	16	3.83
SZ-AF-1000	1000	1070	1115	15	16	4.32
SZ-AF-900	900	970	1015	15	16	3.83
SZ-AF-1000	1000	1070	1115	15	16	4.32
SZ-AF-1120	1120	1190	1270	15	20	6.2
SZ-AF-1250	1250	1320	1400	15	20	7.03

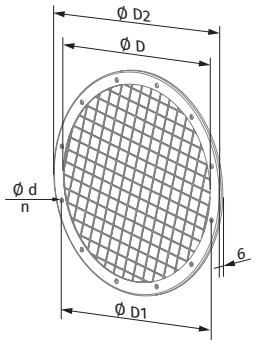

SPRING-LOADED ANTI-VIBRATION MOUNT SIF-AF

- The anti-vibration mounts **SIF-AF** are used for attenuation of noise and vibration generated by ventilation equipment. The anti-vibration mounts reduce dynamic loads, increase reliability and durability of ventilation equipment. Four anti-vibration mounts are required to complete one fan.

Model	Load [kg]	Dimensions and mounting holes [mm]				
		L	H	C	Ø d	Width
SIF-AF-1	7	105	70	82	10.5	58
SIF-AF-2	15	105	70	82	10.5	58
SIF-AF-3	24	105	80	82	10.5	58
SIF-AF-4	29	105	90	82	10.5	58
SIF-AF-5	35	105	113	82	10.5	58
SIF-AF-6	50	105	113	82	10.5	58
SIF-AF-7	80	105	113	82	10.5	58
SIF-AF-8	120	105	113	82	10.5	58

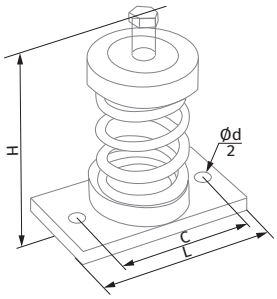

RUBBER ANTI-VIBRATION MOUNT SIG-AF

- The rubber anti-vibration mounts **SIG-AF** are used for attenuation of noise and vibration generated by ventilation equipment.
- The anti-vibration mounts reduce dynamic loads, increase reliability and durability of ventilation equipment. Four anti-vibration mounts are required to complete one fan.

Model	Load [kg]	Dimensions and mounting holes [mm]						
		A	B	C	Ø d	E	L	H
SIG-AF-1	5-35	5	M8	60	9	Ø30	80	40
SIG-AF-2	35-80	10	M10	76	11	Ø40	105	52
SIG-AF-3	50-120	10	M10	76	11	Ø45	105	52

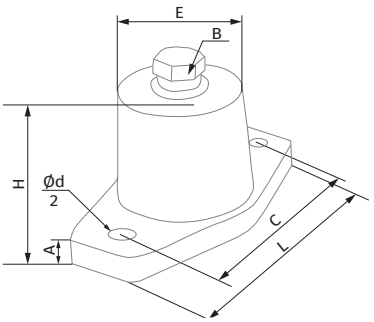

OPERATION OF FANS WITH FREQUENCY CONVERTERS

Ventilation systems produce a heavy load on the electrical systems of a building. Therefore, reducing the power consumption is among the top priorities for construction project designers.

DIRECT ON-LINE STARTING (DOL)

As a rule, smoke extraction systems utilize large high-performance fans. During starting the high inertia of the shaft causes a substantial increase in the start-up time - i.e. the time from the application of power to reaching the rated speed. As a result the motor is subjected to high starting current for a prolonged period of time.

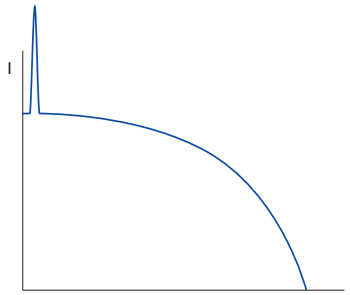

Current diagram with direct on-line starting

Standard switchgear (automatic circuit breakers, contactors and motor starters) is not designed to withstand prolonged overloads causing the fan to shut down automatically during starting.
Using switchgear with a higher maximum current rating renders the electric motor protection system less sensitive.
As a result the switchgear will not be able to detect motor overload in time due to a higher current sensing threshold.
Such challenges can only be addressed by utilizing a soft starter or a frequency converter to start the fan without causing a prolonged overload.

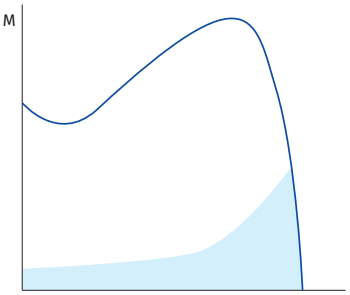

Torque diagram with direct on-line starting

FREQUENCY CONVERTER

A frequency converter (FC) consists of two main component blocks. One converts alternating current (50 or 60 Hz) into direct current.
The other converts direct current into alternating current of variable frequency ranging from 0 to 250 Hz.
By controlling the frequency output the FC offers a broad range of motor speed regulation.
During the starting the FC raises the frequency from 0 Hz to the electrical mains frequency (50 or 60 Hz).
As the frequency is increased gradually, the motor can be assumed to operate at its nominal speed for a given frequency value.
Furthermore, on the assumption that the motor runs at its nominal speed the nominal torque should be immediately available whereas the current will be approximately equal to the nominal value.

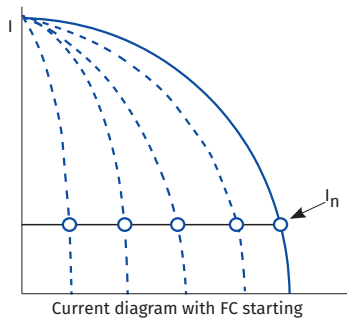

Current diagram with FC starting

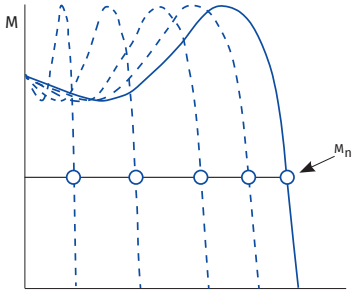

Torque diagram with FC starting

SOFT STARTER

Unlike an FC, a soft starter does not change the frequency of speed.
Instead it gradually increases the voltage supplied to the motor - from the initial level to the nominal level.

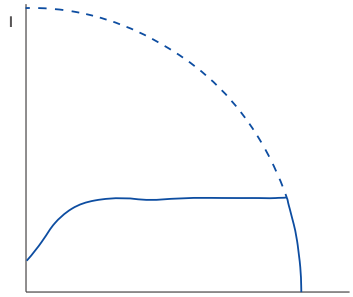

Current diagram with soft starter

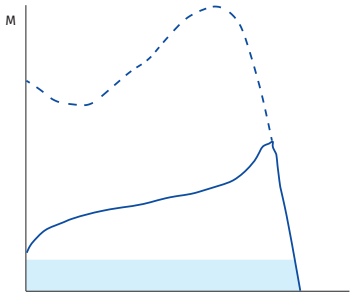

Torque diagram with soft starter

The very low voltage initially supplied to the motor during starting helps avoid sudden jolts.
Both voltage and torque increase gradually.

APPLICATIONS IN VENTILATION SYSTEMS

Using an FC or a soft starter allows to reduce the starting current thereby avoiding a loss of voltage in the electrical mains.
In addition to that the starting torque and mechanical strain on equipment are also reduced which translates into extended maintenance and repair intervals.
General exhaust ventilation (GV) systems and emergency smoke extraction (SE) systems of car parks, warehouses, utility and industrial spaces can be integrated into a single system at the design level.
As the air flow rate a GV system is considerably lower than that in an SE system a high-capacity fan rated for smoke extraction duty runs in partial load mode.
Frequency converters can be programmed for several fixed-speed settings to enable operation in GV and SE modes.
The fan operating modes can be switched upon receiving an external signal from the control system.
Such integration of ventilation systems allows overall cost savings.

FC-51 AND FC-101: WHEN TO USE?

This catalogue features two series of frequency converters: FC-51 and FC-101.
The FC-51 series is only suitable for general ventilation systems.
If intended for a smoke extraction system, the fans should be fitted with the FC-101 series units as they feature an integrated fire mode.
When activated the integrated protection equipment of the frequency converter is overridden enabling the unit to continue operation despite the possibility of sustaining irreparable damage due to overheating or overloading.
In case of a fire, the FC-101 series frequency converters are capable of maintaining a higher air pressure level at landings compared to other areas of the building in order to keep the landings smoke-free.

Micro Drive FC-51

Frequency converters

Use

- This general-purpose variable frequency drive is designed for regulating the rotation speed of an AC electric motor with a maximum power output of 22 kW.
- This unit is only suitable for general ventilation systems.

Design

- The drive construction prevents forced air flow passage through its internal electronic components. The internal circuit boards of are well-protected.

Filter

- The unit features an integrated HF filter which blocks RF interference from the motor and enables the use of a shielded cable up to 15 m long or unshielded cable up to 50 m long as per the applicable EU regulations.

Inputs and outputs

- 5 programmable digital inputs
- PNP/NPN logic
- 20-5000 Hz pulse input
- One 0-10 V or 0-20 mA analogue input
- One 0-20 mA analogue input
- Thermistor input (analogue or digital)
- 1 analogue output
- 1 relay, 240 V, 2 A
- RS 485
- MODBUS RTU

Control panels

Designation	Code
VLT control panel LCP 11 (without potentiometer)	132B0100
VLT Control Panel LCP 12 (with potentiometer)	132B0101

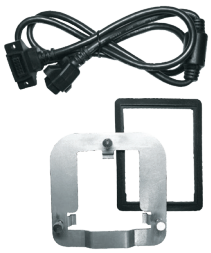

Designation	Code
Remote panel mounting kit	132B0102

Installation

- Back-to-back installation for space savings. Thanks to a compact design the drives can be mounted immediately next to one another without any performance penalties.

Frequency converter type and order code

Three-phase, 380-480 V			
Power [kW]	**Rated current [A]**	**Order code**	**Block type**
0.37	1.2	132F0017	M1
0.75	2.2	132F0018	M1
1.5	3.7	132F0020	M2
2.2	5.3	132F0022	M2
3.0	7.2	132F0024	M3
4.0	9.0	132F0026	M3
5.5	12.0	132F0028	M3
7.5	15.5	132F0030	M3
11.0	23.0	132F0058	M4
15.0	31.0	132F0059	M4
18.0	37.0	132F0060	M5
22.0	43.0	132F0061	M5

Outside dimensions (including mounting ledge)

mm	M1	M2	M3	M4	M5
Height	150	176	239	292	335
Width	70	75	90	125	165
Depth	148	168	194	241	248

+ 6 mm with potentiometer

Basic Drive FC-101

Frequency converters

Use

- This general-purpose variable frequency drive is designed for regulating the rotation speed of an AC electric motor with a maximum power output of 90 kW. This drive is suitable for both general ventilation and smoke extraction ventilation systems.

Certified fire mode

- The fire mode prevents the drive from a self-protecting shut-down. While in this mode the drive continues to perform speed regulation duty for mission-critical fans irrespective of control signals, warnings and alarms which may otherwise force it shut down.

Filter

- A built-in throttle on the DC link ensures a low harmonic load on the power mains as per the EN 61000-3-12 standard requirements.

Inputs and outputs

- Four PNP or NPN programmable digital inputs, 0-24 V DC
- 2 analogue inputs (0-10 V or 0/4-20 mA)
- 2 analogue outputs (0/4-20 mA)
- 2 relay outputs
- MODBUS RTU (RS 485)
- BACnet MSTP
- FC Protocol
- N2 Metasys
- FLN Apogee

Installation

- Thanks to an ultra-compact design the drive can be easily fitted into a larger unit or panel of an air ventilation system. The casings are rated IP20/Type 1/IP21 (optional) and IP54.

Frequency converter type and SKU code

Power	Current	VLT® FC 101 HVAC Basic Drive 0.37-90 kW (3 x 380 – 480 V~, without a braking transistor)			
0.37	1.2	–	131L9861	–	–
0.75	2.2	–	131L9862	131N0177	131N0178
1.5	3.7	–	131L9863	131N0179	131N0180
2.2	5.3	–	131L9864	131N0181	131N0182
3	7.2	–	131L9865	131N0183	131N0184
4	9.1	–	131L9866	131N0185	131N0186
5.5	12	–	131L9867	131N0187	131N0188
7.5	15.5	–	131L9868	131N0189	131N0190
11	23	–	131L9869	131N0191	131N0192
15	31	–	131L9870	131N0193	131N0194
18	37	–	131L9871	131N0195	131N0196
22	42.5	–	131L9872	131N0197	131N0198
30	61	131L9873	131L9875	131N0201	131N0202
37	73	131L9881	131L9883	131N0205	131N0206
45	90	131L9889	131L9891	131N0209	131N0210
55	106	131L9897	131L9899	131N0213	131N0214
75	147	131L9905	131L9907	131N0217	131N0218
90	177	131L9913	131L9915	131N0221	131N0222
Casing		(E20) IP20/Chassis	(E20) IP20/Chasis	IP54	IP54
EMC filter		(H2) RFI class A2 (for industrial areas)	(H3/H4) RFI class A1/B (for residential areas)	(H2) RFI class A2 (for industrial areas)	(H3) RFI class A1/B (for residential areas)
Control panel		(X) without panel	(X) without panel	Integral	Integral

VLT® HVAC Basic frequency converters rated up to 22 kW are fitted with circuit boards with a special class 3C3 protective coating. For frequency converters rated higher than 22 kW this protective coating is optional while, the 3C2 coating is standard.

VLT® FC 101 HVAC Basic Drive frequency converter options

Order code	Description
132B0200	Operator's digital panel
132B0201	Kit for remote mounting of the operator panel to an IP55 cabinet, including 3 m cable
132B0202	Decoupling plate for H1 and H2 standard sizes
132B0204	Decoupling plate for H3 standard size
132B0205	Decoupling plate for H4 and H5 standard sizes
132B0207	Decoupling plate for H6 standard size
132B0242	Decoupling plate for H6 standard size (extra large)
132B0208	Decoupling plate for H7 standard size

Order code	Description
132B0243	Decoupling plate for H7 standard size (extra large)
132B0209	Decoupling plate for H8 standard size
132B0244	External EMC filter class A1/B1 for power output from 0.37 to 2.2 kW
132B0245	External EMC filter class A1/B1 for power output from 3 to 7.5 kW
132B0246	External EMC filter class A1/B1 for power output from 11 to 15 kW
132B0247	External EMC filter class A1/B1 for power output from 18.5 to 22 kW

Blauberg Ventilatoren GmbH
Aidenbachstr. 52
D-81379 Munich

info@blaubergventilatoren.de
www.blaubergventilatoren.de

Technical changes reserved.
Illustrations and texts are non-binding.

04/2019