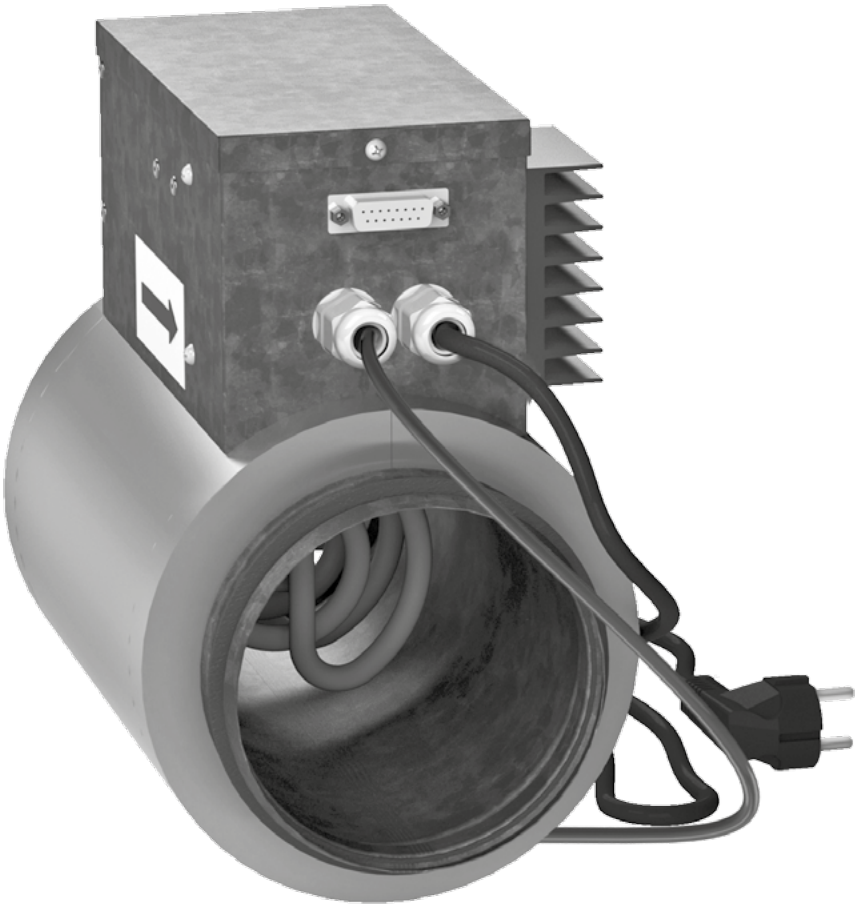

Duct heater for supply air post-heating with external control

ENH

EN *USER'S MANUAL*

BLAUBERG Ventilatoren

CONTENTS

Contents 2
Safety requirements 2
Purpose 4
Delivery set 4
Designation key 4
Technical data 5
Design and operating principle 6
Installation and set-up 7
Connection to power mains 8
Technical maintenance 9
Storage and transportation regulations 9
Manufacturer's warranty 10
Acceptance certificate 11
Seller information 11
Mounting certificate 11
Warranty card 11

This user's manual is a main operating document intended for technical, maintenance, and operating staff.
The manual contains information about the purpose, technical details, operating principle, design, and installation of the ENH unit (-s) and all of its (their) modifications.
Technical and maintenance staff must have theoretical and practical training in the field of ventilation systems and should be able to work in accordance with workplace safety rules as well as construction norms and standards applicable in the territory of the country.
The information in this user's manual is correct at the time of the document's preparation.
The Company reserves the right to modify the technical characteristics, design, or configuration of its products at any time in order to incorporate the latest technological developments.
No part of this publication may be reproduced, stored in a retrieval system, or transmitted, in any form or by any means in any information search system or translated into any language in any form without the prior written permission of the Company.

SAFETY REQUIREMENTS

- Please read the user's manual carefully prior to installing and operating the unit.
- All user's manual requirements as well as the provisions of all the applicable local and national construction, electrical, and technical norms and standards must be observed when installing and operating the unit.
- The warnings contained in the user's manual must be considered most seriously since they contain vital personal safety information.
- Failure to follow the rules and safety precautions noted in this user's manual may result in an injury or unit damage.
- After a careful reading of the manual, keep it for the entire service life of the unit.
- While transferring the unit control, the user's manual must be turned over to the receiving operator.

UNIT INSTALLATION AND OPERATION SAFETY PRECAUTIONS

- Disconnect the unit from power mains prior to any installation operations.

- Unpack the unit with care.

- The unit must be grounded!

- While installing the unit, follow the safety regulations specific to the use of electric tools.

- Do not change the power cable length at your own discretion. Do not bend the power cable. Avoid damaging the power cable. Do not put any foreign objects on the power cable.

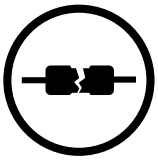

- Do not use damaged equipment or cables when connecting the unit to power mains.

- Do not touch the unit controls with wet hands. Do not carry out the installation and maintenance operations with wet hands.

- Do not allow children to operate the unit.

- Do not store any explosive or highly flammable substances in close proximity to the unit.

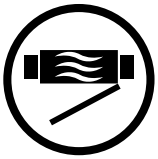

- Do not open the unit during operation.

- Do not block the air duct when the unit is switched on.

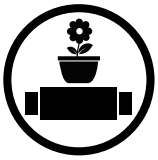

- Do not sit on the unit and avoid placing foreign objects on it.

- Do not lay the power cable of the unit in close proximity to heating equipment.

- Do not operate the unit outside the temperature range stated in the user's manual. Do not operate the unit in aggressive or explosive environments.

- Do not wash the unit with water. Protect the electric parts of the unit against ingress of water.

- Disconnect the unit from power mains prior to any technical maintenance.

- When the unit generates unusual sounds, odour, or emits smoke, disconnect it from power supply and contact the Seller.

- Do not direct the air flow produced by the unit towards open flame or ignition sources.

- In case of continuous operation of the unit, periodically check the security of mounting.

- Use the unit only for its intended purpose.

THE PRODUCT MUST BE DISPOSED SEPARATELY AT THE END OF ITS SERVICE LIFE.
DO NOT DISPOSE THE UNIT AS UNSORTED DOMESTIC WASTE.

PURPOSE

The heater is designed for integration into a ventilation system and joint operation with an air handling unit equipped with a control system used to switch on the heater and control its operation.
The heater maintains the supply duct air temperature at a point set by the unit controller.

THE UNIT SHOULD NOT BE OPERATED BY CHILDREN OR PERSONS WITH REDUCED PHYSICAL, MENTAL, OR SENSORY CAPACITIES, OR THOSE WITHOUT THE APPROPRIATE TRAINING.

THE UNIT MUST BE INSTALLED AND CONNECTED ONLY BY PROPERLY QUALIFIED PERSONNEL AFTER THE APPROPRIATE BRIEFING.

THE CHOICE OF UNIT INSTALLATION LOCATION MUST PREVENT UNAUTHORIZED ACCESS BY UNATTENDED CHILDREN.

DELIVERY SET

NAME	NUMBER
Heater	1 pc.
Connecting cable with DB-15M connectors	1 pc.
User's manual	1 pc.
Packing box	1 pc.

DESIGNATION KEY

ENH XXX XX 1 S21

Compatability with automation
_: compatible with S11/S19 automation
S21: compatible with S21 automation

Phases
1: single-phase

Heater power consumption [kW]
0.6
0.8
1.2
1.7
2.0

Connecting air duct diameter [mm]
125
150
160
200

Unit Type
ENH duct heater for supply air post-heating

TECHNICAL DATA

The heater is rated for indoor application with the ambient temperature ranging from -30°C up to +40°C and relative humidity up to 80 %.
The heater is rated for connection to single-phase AC 230 V/50 (60) Hz.
The recommended minimum air flow speed in the air duct is 1.5 m/s.
Hazardous parts access and water ingress protection rating: IP 40
The heater design is regularly improved, so some models may slightly differ from those ones described in this manual.

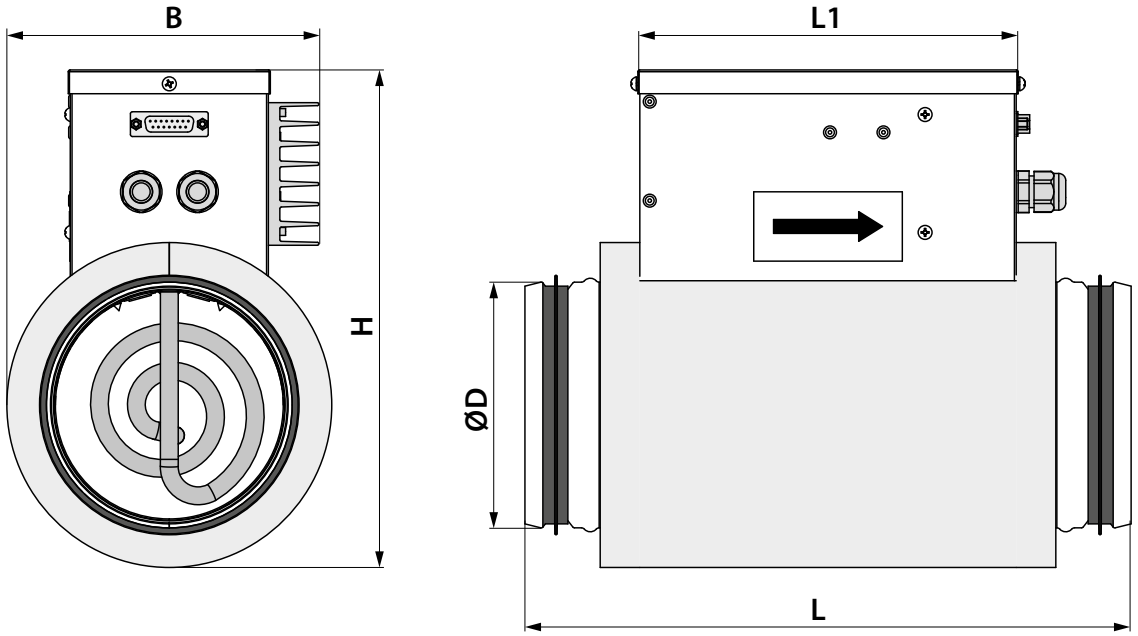

Model	Technical data		Dimensions [mm]					Weight [kg]
	Power consumption of electric heating elements [kW]	Current [A]	Ø D	B	H	L	L1	
ENH 125-0.6-1	0,6	2,6	124	155	251	306	190	2,1
ENH 125-0.8-1	0,8	3,5						
ENH 125-1.2-1	1,2	5,2						
ENH 150-0.8-1	0,8	3,5	149	170	282	306	190	2,3
ENH 150-1.2-1	1,2	5,2						
ENH 150-1.7-1	1,7	7,4						
ENH 150-2.0-1	2,0	8,7						
ENH 160-0.8-1	0,8	3,5	159	175	293	306	190	2,5
ENH 160-1.2-1	1,2	5,2						
ENH 160-1.7-1	1,7	7,4						
ENH 160-2.0-1	2,0	8,7						
ENH 200-1.2-1	1,2	5,2	199	195	337	306	190	2,8
ENH 200-1.7-1	1,7	7,4						
ENH 200-2.0-1	2,0	8,7						

DESIGN AND OPERATING PRINCIPLE

The control box is rigidly fixed to the heater casing and covered with a detachable cover.
The control box incorporates:

- fasteners for the electric heating element;
- electric components for connection to power supply;
- ground screw clamp;
- manual reset thermal switch TS-90;
- automatic reset thermal switch TS-50;

The cable gland for power cable, the cable gland for the supply air temperature sensor as well as the connector for connection to the air handling unit are located on the front panel of the control box. The tubular electric heating element is located inside the casing. The casing, the connecting box and the heater cover are made of galvanized steel. The heater casing is heat-insulated with 20 mm mineral wool layer. Connect the EVB heater and the air handling unit using the cable with DB-15 connectors and connect it to the power mains. The electric heating element heats the air in the supply air duct.
Smooth control of air heating is performed with a signal given from the unit controller to the semiconductor regulator.
In case of overheating the thermostats switch the heater off.

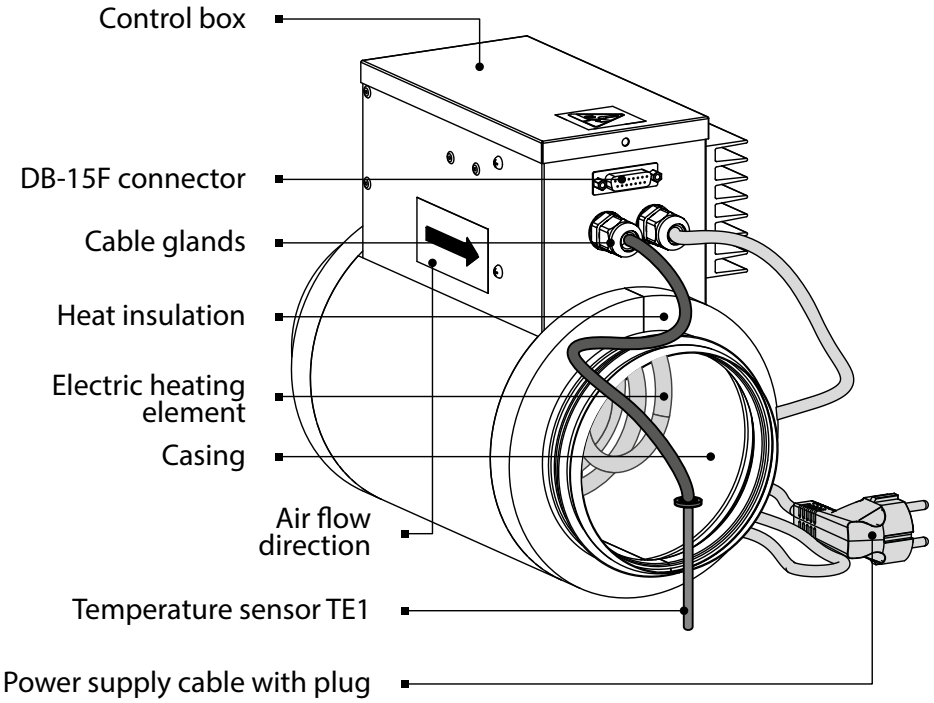

INSTALLATION AND SET-UP

READ THE USER'S MANUAL BEFORE INSTALLING THE UNIT.

WARNING!

Do not remove the plugs before the heaters are connected to the air handling unit.
Make sure to cover the socket connector with the plugs after dismantling of the connecting cable.
If only one heater is connected, do not remove the plugs from the other socket connector that is not in use.
If the socket connectors are not covered with plugs for any reasons, the ventilation unit does not start during connection to power supply and the control panel displays DI1, DI3 and TE1 errors. Turn the unit off and cover the socket connectors with the plugs to troubleshoot the errors.

1. Connect air ducts to the heater

The heater is designed for inline mounting in the air duct both horizontally and vertically.

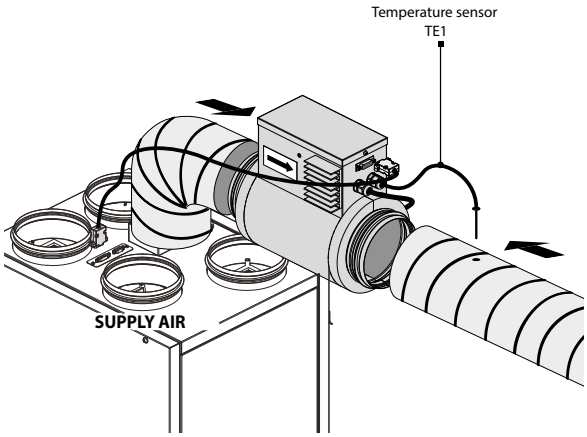

2. Install the duct temperature sensor TE1

The sensor is mounted in the supply air duct downstream of the heater at the distance of min 1 m from the heater.

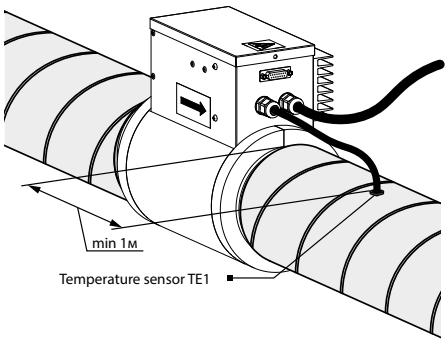

Heater position

In case of horizontal mounting position the control box cover must be directed upwards only.
The maximum deviation angle is 90°. The control box cover may not be positioned downwards!

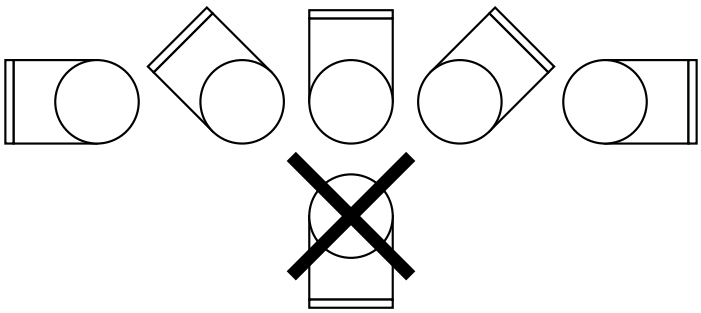

CONNECTION TO POWER MAINS

POWER OFF THE POWER SUPPLY PRIOR TO ANY OPERATIONS WITH THE UNIT.
THE UNIT MUST BE CONNECTED TO POWER SUPPLY BY A QUALIFIED ELECTRICIAN.
THE RATED ELECTRICAL PARAMETERS OF THE UNIT ARE GIVEN ON THE MANUFACTURER'S LABEL.

ANY TAMPERING WITH THE INTERNAL CONNECTIONS IS PROHIBITED AND WILL VOID THE WARRANTY.

Temperature sensor TE1

The TE1 sensor is connected to the heater terminals by the manufacturer. The sensor cable is routed through the cable gland at the casing of the heater.

Connection of the heater with the air handling unit

The connection must be completed prior to connection of the heater and the air handling unit to power mains!
Connect the heater and the air handling unit using the cable with DB-15M connectors through the DB-15F external connectors located on the heater or on the air handling unit.

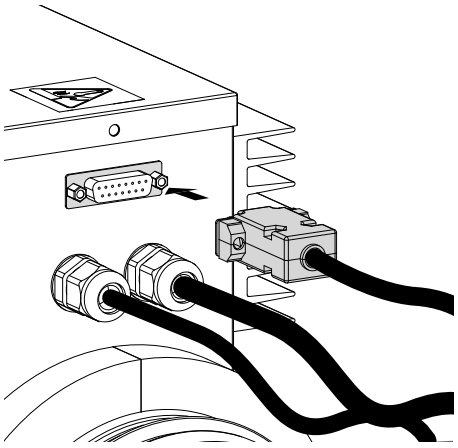

HEATER CONNECTION TO POWER MAINS

Connect the heater to AC single-phase 230 V / 50 (60) Hz power mains using a pre-wired power cable with a plug

Wiring diagram

Option 1 (with sensor KDT2-M)

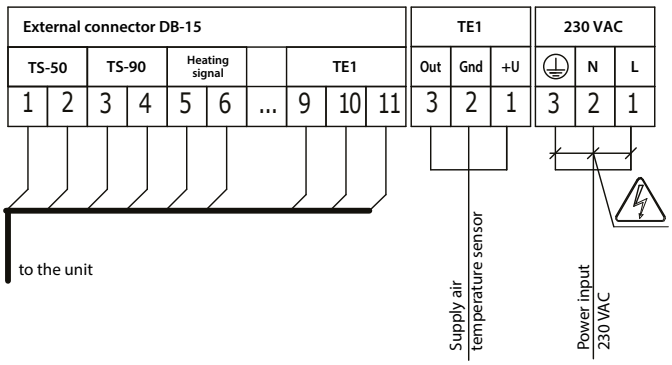

Option 2 (with sensor VK U, TT U)

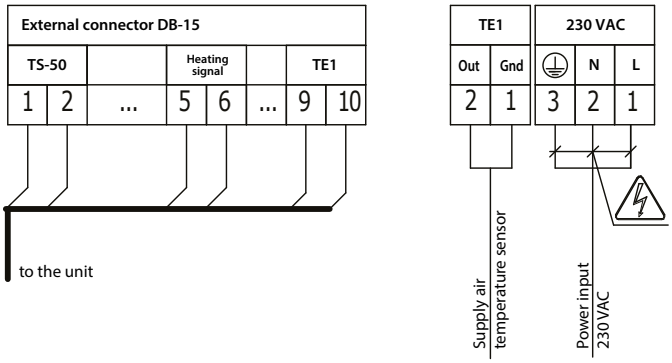

Design.	Name	Type
TS-50	Contacts of automatic reset thermal switch with response temperature +50 °C.	N0
TS-90	Contacts of manual reset thermal switch with response temperature +90 °C	N0
Heating signal	Heater control triac input signal	VAC
TE1	Supply air sensor signal	VDC

TECHNICAL MAINTENANCE

DISCONNECT THE UNIT FROM POWER SUPPLY BEFORE ANY MAINTENANCE OPERATIONS!

The heater maintenance includes:

- Inspection of screw connections as well as rivet and welded joints.
- Inspection of tightening of ground screw clamps and electric connections.
- Inspection of the wire terminal connections.
- Cleaning of the electric heating elements of dust and dirt.

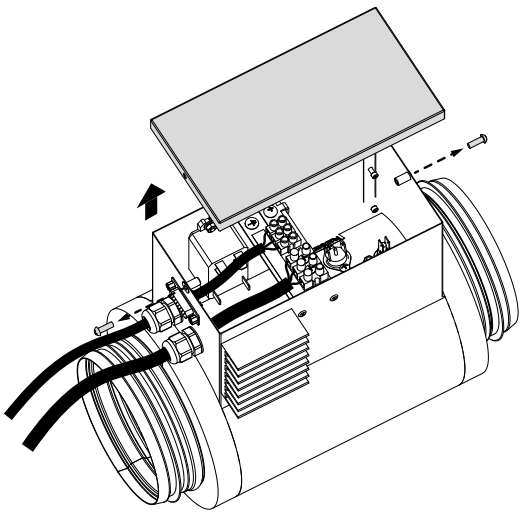

STORAGE AND TRANSPORTATION REGULATIONS

- Store the unit in the manufacturer's original packaging box in a dry closed ventilated premise with temperature range from +5 °C to + 40 °C and relative humidity up to 70 %.
- Storage environment must not contain aggressive vapors and chemical mixtures provoking corrosion, insulation, and sealing deformation.
- Use suitable hoist machinery for handling and storage operations to prevent possible damage to the unit.
- Follow the handling requirements applicable for the particular type of cargo.
- The unit can be carried in the original packaging by any mode of transport provided proper protection against precipitation and mechanical damage. The unit must be transported only in the working position.
- Avoid sharp blows, scratches, or rough handling during loading and unloading.
- Prior to the initial power-up after transportation at low temperatures, allow the unit to warm up at operating temperature for at least 3-4 hours.

MANUFACTURER'S WARRANTY

- The product is in compliance with EU norms and standards on low voltage guidelines and electromagnetic compatibility. We hereby declare that the product complies with the provisions of Electromagnetic Council Directive 2014/30/EU, Low Voltage Directive 2014/35/EU and CE-marking Directive 93/68/EEC. This certificate is issued following test carried out on samples of the product referred to above.

The manufacturer hereby warrants normal operation of the unit for 24 months after the retail sale date provided the user's observance of the transportation, storage, installation, and operation regulations. Should any malfunctions occur in the course of the unit operation through the Manufacturer's fault during the guaranteed period of operation, the user is entitled to get all the faults eliminated by the manufacturer by means of warranty repair at the factory free of charge. The warranty repair includes work specific to elimination of faults in the unit operation to ensure its intended use by the user within the guaranteed period of operation. The faults are eliminated by means of replacement or repair of the unit components or a specific part of such unit component.

The warranty repair does not include:

- routine technical maintenance
- unit installation/dismantling
- unit setup

To benefit from warranty repair, the user must provide the unit, the user's manual with the purchase date stamp, and the payment paperwork certifying the purchase. The unit model must comply with the one stated in the user's manual. Contact the Seller for warranty service.

The manufacturer's warranty does not apply to the following cases:

- User's failure to submit the unit with the entire delivery package as stated in the user's manual including submission with missing component parts previously dismounted by the user.
- Mismatch of the unit model and the brand name with the information stated on the unit packaging and in the user's manual.
- User's failure to ensure timely technical maintenance of the unit.
- External damage to the unit casing (excluding external modifications as required for installation) and internal components caused by the user.
- Redesign or engineering changes to the unit.
- Replacement and use of any assemblies, parts and components not approved by the manufacturer.
- Unit misuse.
- Violation of the unit installation regulations by the user.
- Violation of the unit control regulations by the user.
- Unit connection to power mains with a voltage different from the one stated in the user's manual.
- Unit breakdown due to voltage surges in power mains.
- Discretionary repair of the unit by the user.
- Unit repair by any persons without the manufacturer's authorization.
- Expiration of the unit warranty period.
- Violation of the unit transportation regulations by the user.
- Violation of the unit storage regulations by the user.
- Wrongful actions against the unit committed by third parties.
- Unit breakdown due to circumstances of insuperable force (fire, flood, earthquake, war, hostilities of any kind, blockades).
- Missing seals if provided by the user's manual.
- Failure to submit the user's manual with the unit purchase date stamp.
- Missing payment paperwork certifying the unit purchase.

FOLLOWING THE REGULATIONS STIPULATED HEREIN WILL ENSURE A LONG AND TROUBLE-FREE OPERATION OF THE UNIT.

USER'S WARRANTY CLAIMS SHALL BE SUBJECT TO REVIEW ONLY UPON PRESENTATION OF THE UNIT, THE PAYMENT DOCUMENT AND THE USER'S MANUAL WITH THE PURCHASE DATE STAMP.

ACCEPTANCE CERTIFICATE

Unit Type	Duct heater for supply air post-heating with external control
Model	ENH _____
Serial Number	
Manufacture Date	
Quality Inspector's Stamp	

SELLER INFORMATION

Seller	
Address	
Phone Number	
E-mail	
Purchase Date	
This is to certify acceptance of the complete unit delivery with the user's manual. The warranty terms are acknowledged and accepted.	
Customer's Signature	

Seller's Stamp

MOUNTING CERTIFICATE

The ENH _____ unit is installed pursuant to the requirements stated in the present user's manual.		
Company name		
Address		
Phone Number		
Installation Technician's Full Name		
Installation Date:	**Signature:**	
The unit has been installed in accordance with the provisions of all the applicable local and national construction, electrical and technical codes and standards. The unit operates normally as intended by the manufacturer.		
Signature:		

Installation Stamp

WARRANTY CARD

Unit Type	Duct heater for supply air post-heating with external control
Model	ENH _____
Serial Number	
Manufacture Date	
Purchase Date	
Warranty Period	
Seller	

Seller's Stamp

BLAUBERG
Ventilatoren

www.blaubergventilatoren.de
B125EN-04