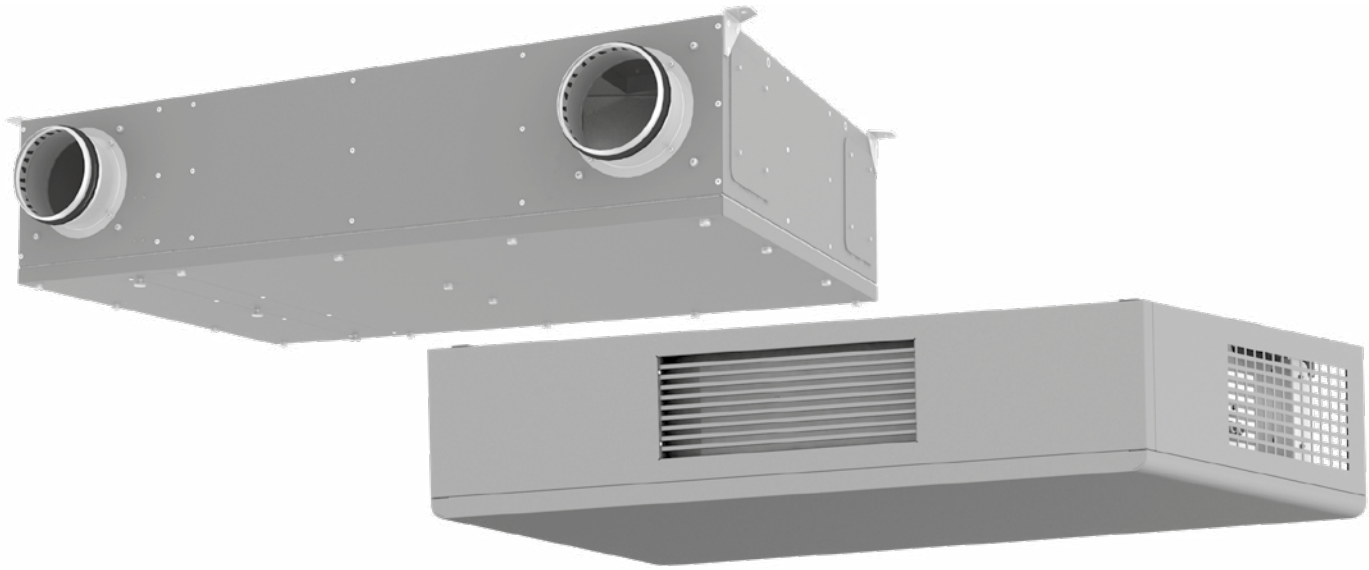

AIR HANDLING UNIT

Hybrid

EN *USER'S MANUAL*

BLAUBERG

CONTENTS

Safety requirements 2
Purpose 4
Delivery set 4
Designation key 4
Technical data 5
Design and operating principle 7
Troubleshooting 21
Storage and transportation regulations 22
Manufacturer's warranty 23
Certificate of acceptance 27
Seller information 27
Installation certificate 27
Warranty card 27

This user's manual is a main operating document intended for technical, maintenance, and operating staff.
The manual contains information about purpose, technical details, operating principle, design, and installation of the Hybrid unit and all its modifications.
Technical and maintenance staff must have theoretical and practical training in the field of ventilation systems and should be able to work in accordance with workplace safety rules as well as construction norms and standards applicable in the territory of the country.

SAFETY REQUIREMENTS

This unit is not intended for use by persons (including children) with reduced physical, sensory or mental capabilities, or lack of experience and knowledge, unless they have been given supervision or instruction concerning use of the unit by a person responsible for their safety.
Children should be supervised to ensure that they do not play with the unit.

This appliance can be used by children aged from 8 years and above and persons with reduced physical, sensory or mental capabilities or lack of experience and knowledge if they have been given supervision or instruction concerning use of the appliance in a safe way and understand the hazards involved.
Cleaning and user maintenance shall not be made by children without supervision.
Children shall not play with the appliance.

Precautions must be taken to avoid the back-flow of gases into the room from the open flue of gas or other fuel-burning appliances.

The appliance may adversely affect the safe operation of appliances burning gas or other fuels (including those in other rooms) due to back flow of combustion gases. These gases can potentially result in carbon monoxide poisoning. After installation of the unit the operation of flued gas appliances should be tested by a competent person to ensure that back flow of combustion gases does not occur.

Connection to the mains must be made through a disconnecting device, which is integrated into the fixed wiring system in accordance with the wiring rules for design of electrical units, and has a contact separation in all poles that allows for full disconnection under overvoltage category III conditions.

All operations described in this manual must be performed by qualified personnel only, properly trained and qualified to install, make electrical connections and maintain ventilation units.
Do not attempt to install the product, connect it to the mains, or perform maintenance yourself. This is unsafe and impossible without special knowledge.
Disconnect the power supply prior to any operations with the unit.
All user's manual requirements as well as the provisions of all the applicable local and national construction, electrical, and technical norms and standards must be observed when installing and operating the unit.
Disconnect the unit from the power supply prior to any connection, servicing, maintenance, and repair operations.
Connection of the unit to power mains is allowed by a qualified electrician with a work permit for the electric units up to 1000 V after careful reading of the present user's manual.
Check the unit for any visible damage of the impeller, the casing, and the grille before starting installation. The casing internals must be free of any foreign objects that can damage the impeller blades.
While mounting the unit, avoid compression of the casing! Deformation of the casing may result in motor jam and excessive noise.
Misuse of the unit and any unauthorised modifications are not allowed.
Do not expose the unit to adverse atmospheric agents (rain, sun, etc.).
Transported air must not contain any dust or other solid impurities, sticky substances, or fibrous materials.
Do not use the unit in a hazardous or explosive environment containing spirits, gasoline, insecticides, etc.
Do not close or block the intake or extract vents in order to ensure the efficient air flow.
Do not sit on the unit and do not put objects on it.
The information in this user's manual was correct at the time of the document's preparation.
The Company reserves the right to modify the technical characteristics, design, or configuration of its products at any time in order to incorporate the latest technological developments.
Never touch the unit with wet or damp hands.
Never touch the unit when barefoot.
BEFORE INSTALLING ADDITIONAL EXTERNAL DEVICES, READ THE RELEVANT USER MANUALS.

THE PRODUCT MUST BE DISPOSED SEPARATELY AT THE END OF ITS SERVICE LIFE.

DO NOT DISPOSE THE UNIT AS UNSORTED DOMESTIC WASTE

PURPOSE

The unit is designed to ensure continuous mechanical air exchange in houses, offices, hotels, cafes, conference halls, and other utility and public spaces as well as to recover the heat energy contained in the air extracted from the premises to warm up the filtered stream of intake air.
The unit is not intended for organizing ventilation in swimming pools, saunas, greenhouses, summer gardens, and other spaces with high humidity.
Due to the ability to save heating energy by means of energy recovery, the unit is an important element of energy-efficient premises.
The unit is a component part and is not designed for stand-alone operation. It is rated for continuous operation.
Transported air must not contain any flammable or explosive mixtures, evaporation of chemicals, sticky substances, fibrous materials, coarse dust, soot and oil particles or environments favourable for the formation of hazardous substances (toxic substances, dust, pathogenic germs).

DELIVERY SET

Name	Number
Air handling unit	1 pc.
User's manual	1 pc.
Packing box	1 pc.

DESIGNATION KEY

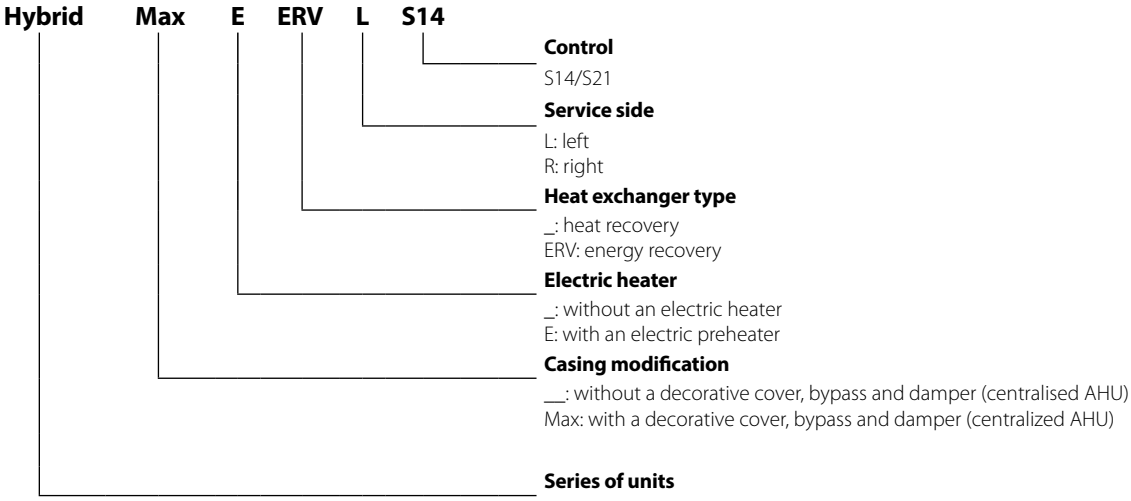

TECHNICAL DATA

The unit is designed for indoor application with the ambient temperature ranging from +10 °C up to +40 °C and relative humidity up to 60 % without condensation. In cold, damp rooms, there is a possibility of freezing or condensation inside and outside the casing.
In order to prevent condensation on the internal walls of the unit, it is necessary that the surface temperature of the casing is 2-3 °C above the dew point temperature of the transported air.
The unit should be operated continuously, and in cases where ventilation is not necessary, reduce the air flow of the fans to a minimum (20%). This will ensure a favourable indoor climate and reduce the amount of condensation inside the unit, which can damage electronic components. Never use the unit for dehumidification, for example, of new buildings.
The unit is rated as a Class I electrical appliance.
Hazardous parts access and water ingress protection rating:

- IP22 for the unit connected to the air ducts
- IP44 for the unit motors.

The unit design is constantly being improved, thus some models may be slightly different from those described in this manual.

OVERALL DIMENSIONS OF THE UNIT [mm]

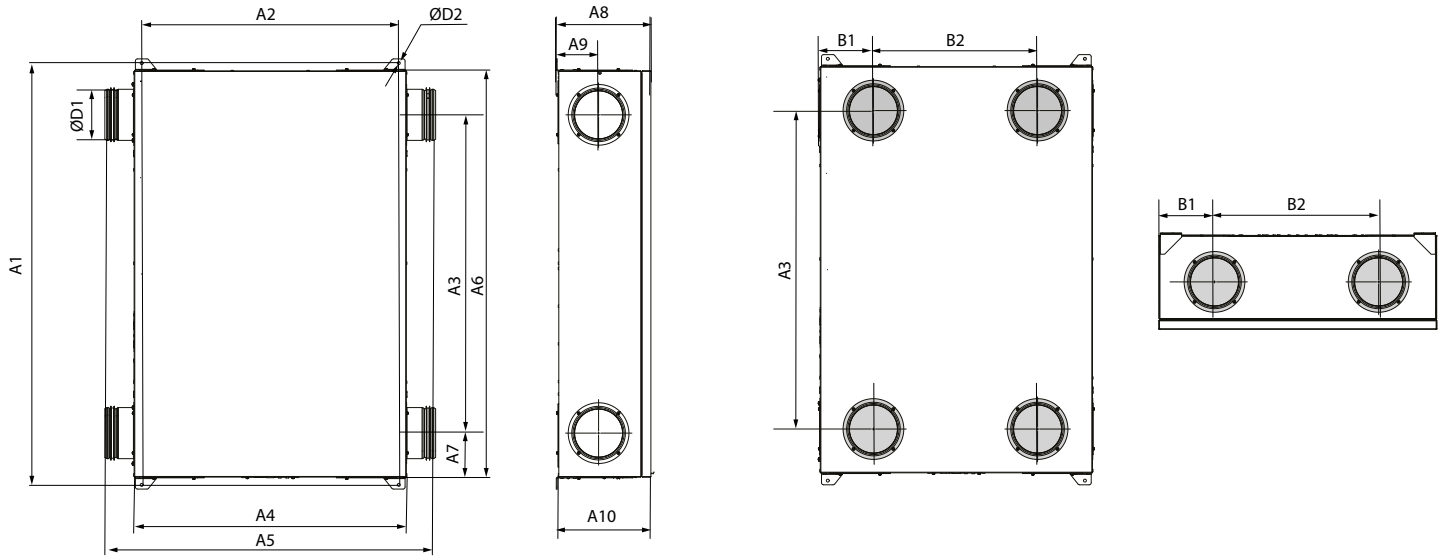

	A1	A2	A3	A4	A5	A6	A7	A8	A9	A10	B1	B2	D1	D2
Hybrid	1007	615	760	650	790	970	105	226	101	220	95	460	125	7

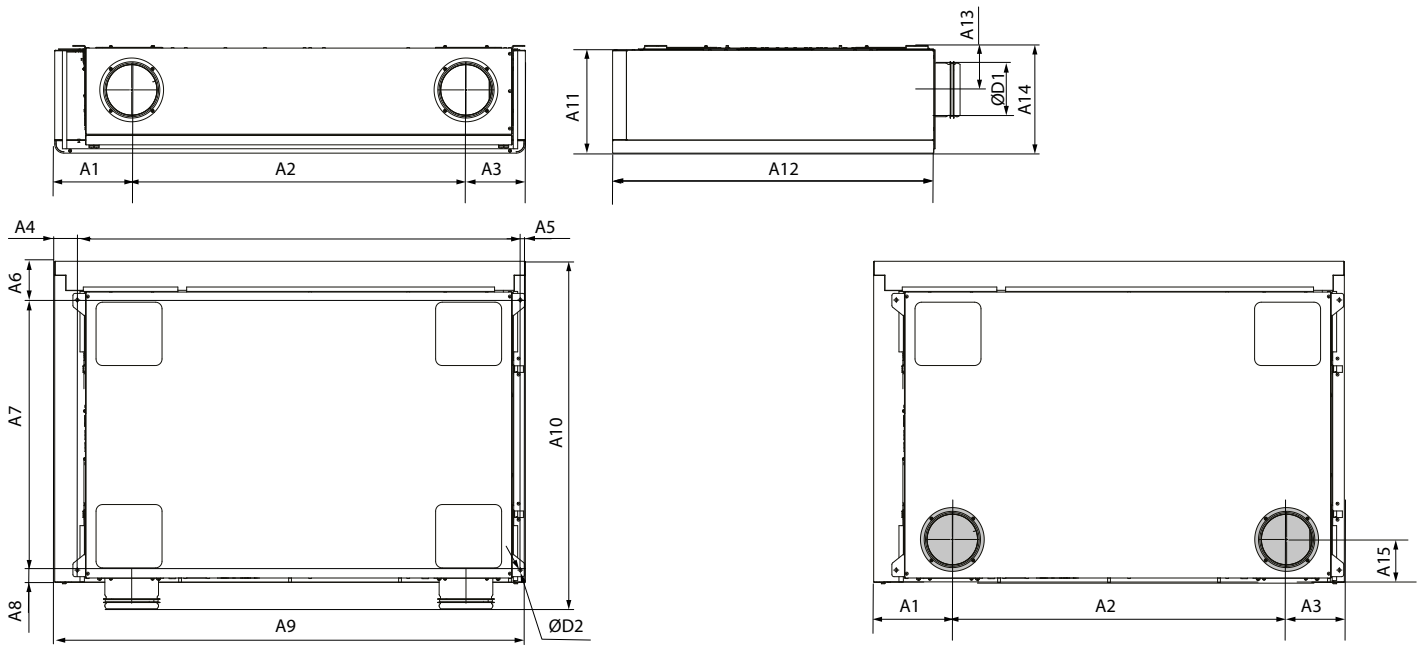

	A1	A2	A3	A4	A5	A6	A7	A8	A9	A10	A11	A12	A13	A14	A15	D1	D2
Hybrid Max	175	760	135	650	11	88	615	28	1070	790	235	730	101	251	106	125	7

Model	**Hybrid Max ERV**	**Hybrid Max E ERV**	**Hybrid ERV**	**Hybrid Max**	**Hybrid Max E**	**Hybrid**
Unit voltage [V/50 (60) Hz]	1~230					
Maximum unit power without an electric heater, a damper and bypass [W]	58					
Electric preheater power [W]	—	800	—	—	800	—
Maximum current without an electric heater [A]	0,5					
Maximum current with an electric heater [A]	—	4	—	—	4	—
Air flow [m³/h]	160					
RPM [min^{-1}]	2800					
Sound pressure level LpA through the casing at 1 m distance [dBA]	42	42	42	42	42	42
Sound pressure level LpA through the casing at 3 m distance [dBA]	32	32	33	32	32	33
Transported air temperature [°C]	-25...+40					
Casing material	Aluzinc					
Insulation	20					
Extract filter	Coarse 90 % / G4					
Supply filter	ePM1 70 % / F7 (G4)					
Connected air duct diameter [mm]	125					
Weight [kg]	47	47	31	47	47	31
Heat recovery efficiency [%]	74...89 %			84...95 %		
Humidity recovery efficiency [%]	47...60 %			—	—	—
Heat exchanger type	Counter-flow					
Heat exchanger material	Enthalpy membrane			Polystyrene		
SEC class	A			A+		

DESIGN AND OPERATING PRINCIPLE

Unit operation logic

Heat recovery

Warm stale extract air from the room flows into the unit, where it is filtered by the extract filter, then air flows through the heat exchanger and is exhausted outside by the extract fan. Cold fresh air from the outside flows into the unit, where it is cleaned by the supply filter. Then the air flows through the heat exchanger and is directed to the room with the supply fan.

Supply air is heated in the heat exchanger by transferring the heat energy of warm and humid extract air to the cold fresh air. The air flows are fully separated while flowing through the heat exchanger. Heat recovery minimizes heat losses, which reduces the cost of space heating in the cold season.

Without heat recovery for models with bypass

In Summer Cooling mode, the bypass damper is open and room air passes through the heat exchanger without heat transfer. The temperature of the air is not changed after passing through the heat exchanger.

No heat recovery for models without bypass with S14 automation

Press the "Summer Cooling mode" button on the control panel. The supply fan will stop and only the exhaust fan will run. Open the windows to allow air from the outside to enter the room.

Freeze protection

The unit has automatic heat exchanger freeze protection modes depending on the unit model. A freezing danger appears, if the exhaust air temperature downstream of the heat exchanger is below +5 °C and the intake air temperature upstream of the heat exchanger is below -3 °C.

In case of freezing danger, the supply fan is turned off in the Hybrid (Max) (E) (ERV) S14 units. After temperature increase the unit returns to the previous operation mode.

In the Hybrid (Max) (E) (ERV) S21 units, there are two modes for frost protection: switching off the supply fan and preheating the air (if there is a preheater). Mode selection and settings are described in the control system user's manual.

UNIT DESIGN

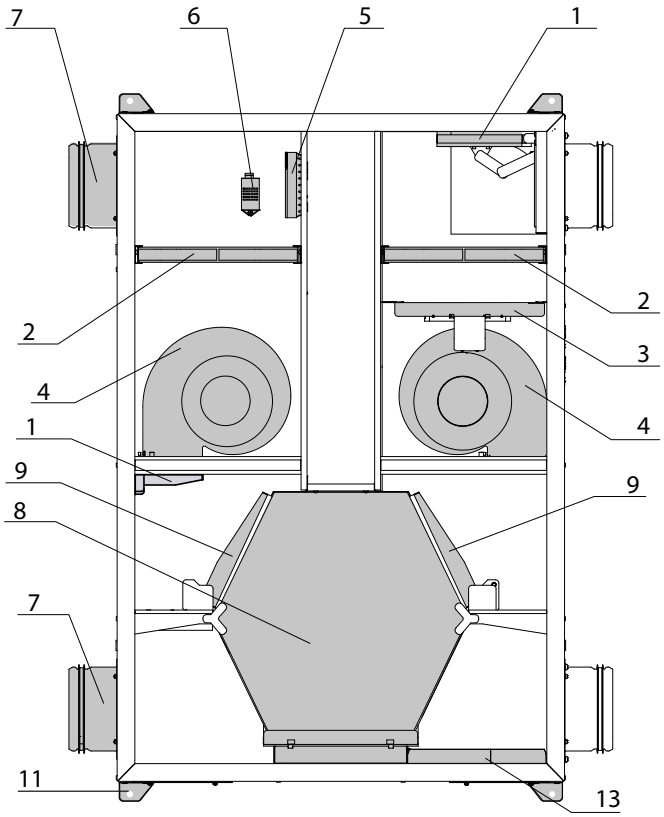

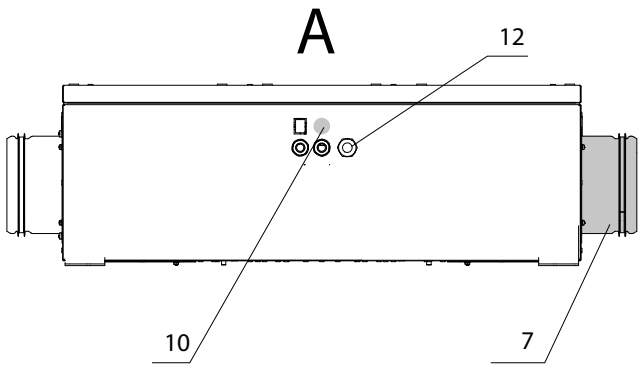

1 Damper (for Hybrid Max (E) (ERV) units).
2 Filter.
3 Electric heater only for Hybrid Max E (ERV) units.
4 Turbine.
5 CO_2 sensor (option).
6 Humidity sensor (option).
7 Spigot (only for Hybrid (ERV) units).
8 Heat exchanger.
9 Bypass (for Hybrid Max (ERV units).
10 SETUP MODE button (for units with S21 automation system).
11 Mounting bracket.
12 Cable glands.
13 Drain pan

The unit is equipped with a removable filter access plate. The plate is secured with knurled screws.

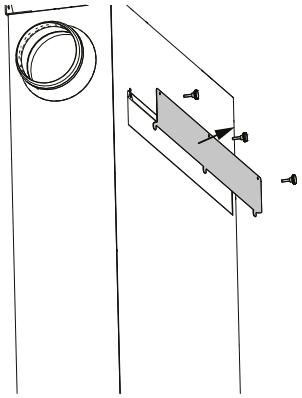

The unit is equipped with a service panel for connection and maintenance.

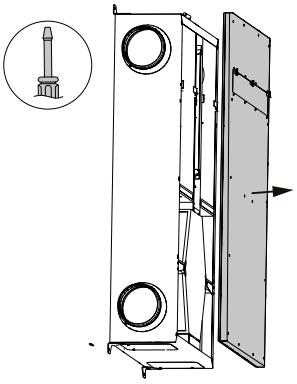

RIGHT-HANDED AND LEFT-HANDED MODIFICATIONS OF Hybrid (ERV) UNITS

The figure below shows the arrangement of spigots for left- and right-handed modifications. Choosing the right arrangement can improve the ease of installation, shorten the length of the ducts and reduce the number of air duct bends.

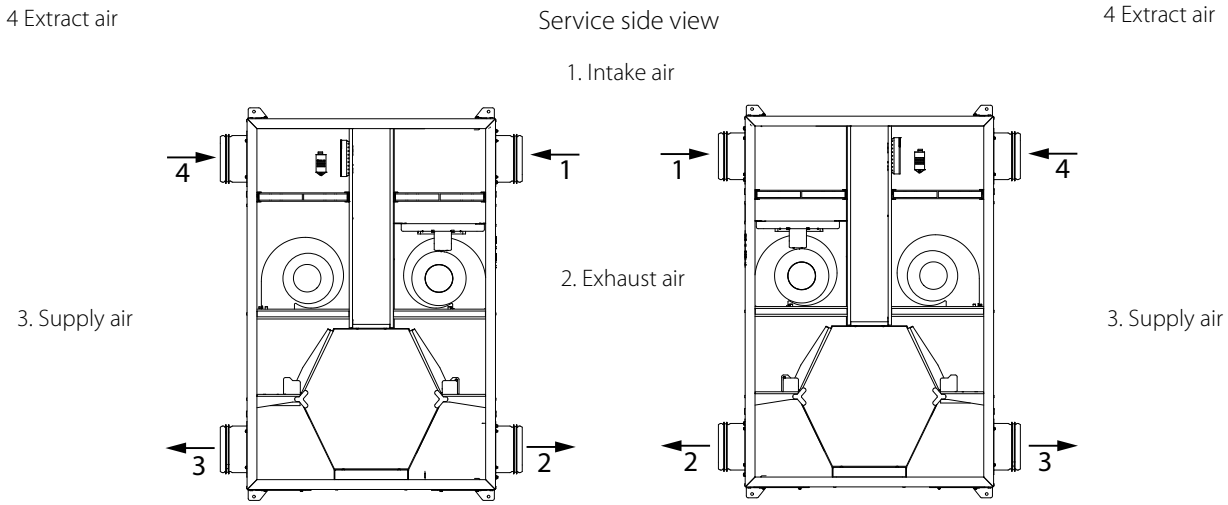

LOCATION OF SPIGOTS AND GRILLES OF Hybrid Max (E) (ERV) UNITS

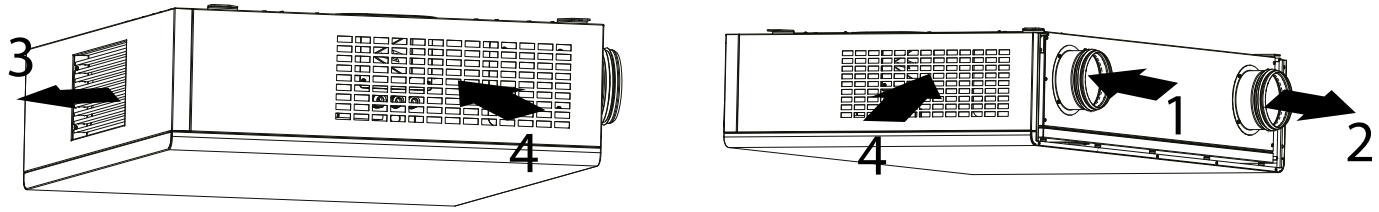

1 – intake air; 2 – exhaust air; 3 – supply air; 4 – extract air.

MOUNTING AND SET-UP

READ THE USER'S MANUAL PRIOR TO MOUNTING THE UNIT.
BEFORE INSTALLING ADDITIONAL EXTERNAL DEVICES,
READ THE RELEVANT USER'S MANUALS

Before installing the Hybrid Max (E) (ERV) units, the decorative cover must be removed. To do this, move it upwards and pull it away from the spigots.

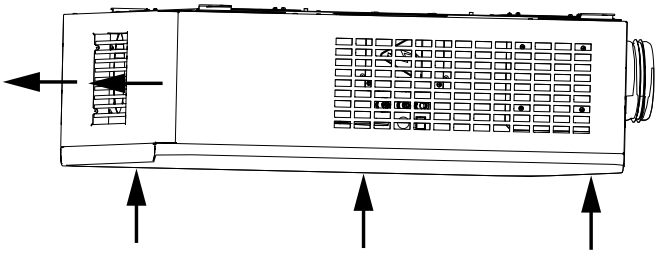

The design of the units allows changing the direction of the air ducts.
To change the direction of the air duct, remove the spigot and remove the plug.

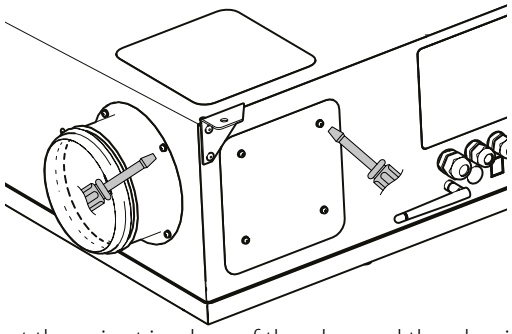

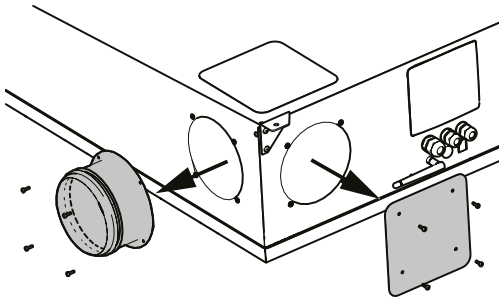

Then mount the spigot in place of the plug and the plug in place of the spigot.

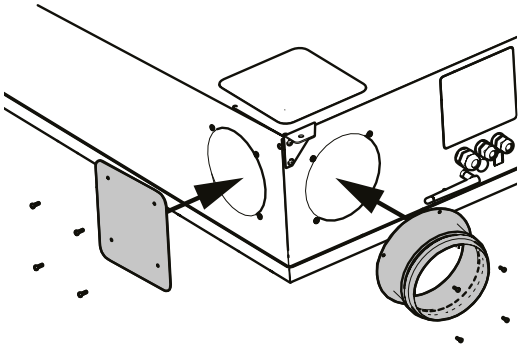

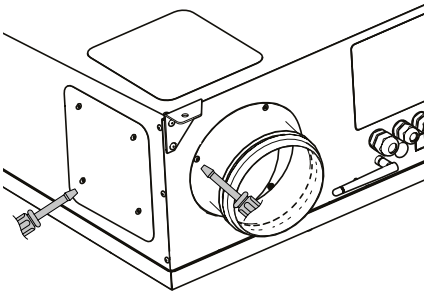

Examples of spigot configurations

Hybrid (ERV)

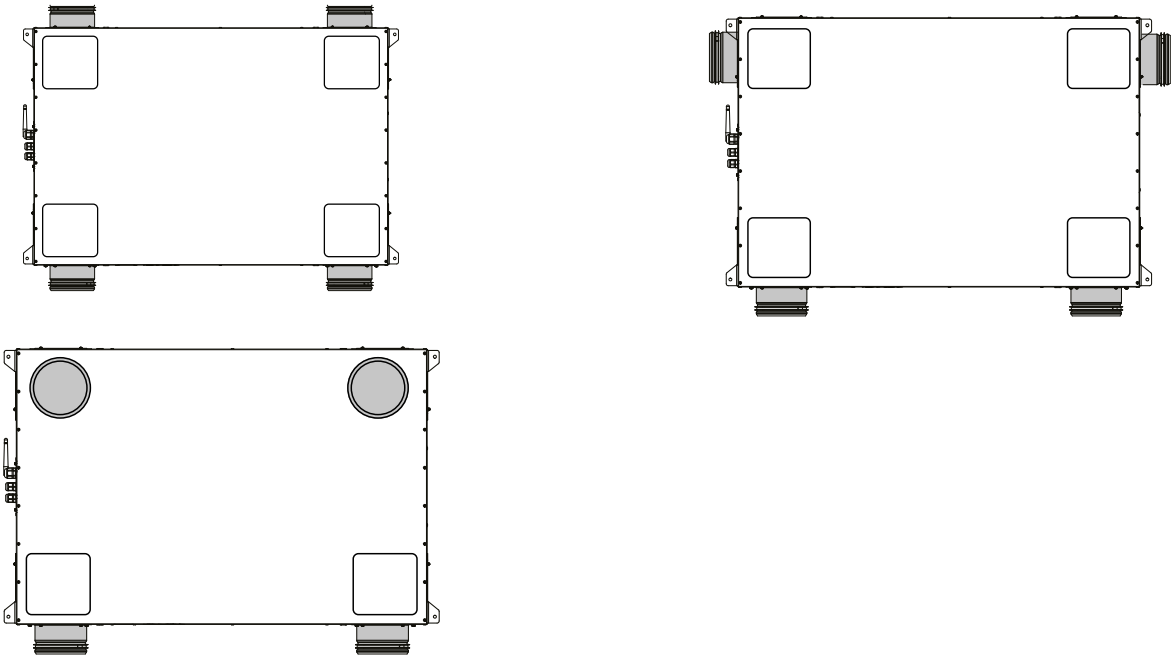

Hybrid Max (E) (ERV)

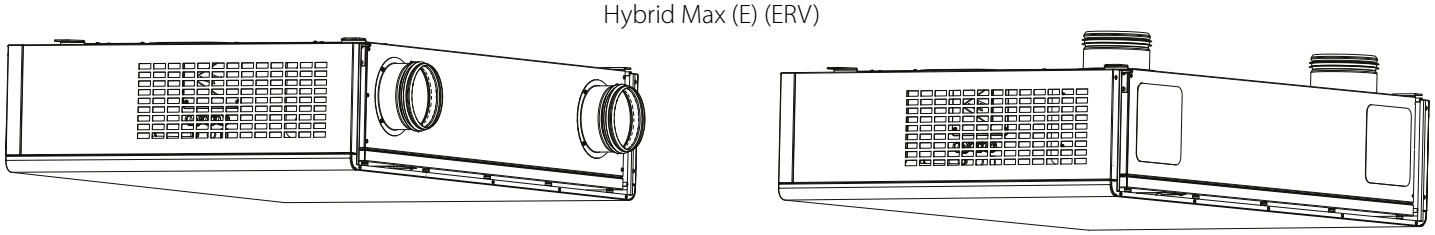

The Hybrid Max (E) (ERV) units are equipped with air dampers. When changing the spigot position, it is necessary to reinstall the corresponding damper.
To do this, after removing the spigot and removing the plug, unscrew the four screws holding the damper.

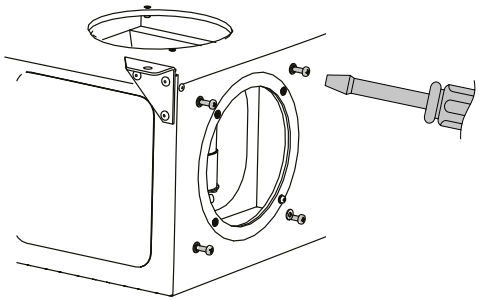

Reinstall the damper.

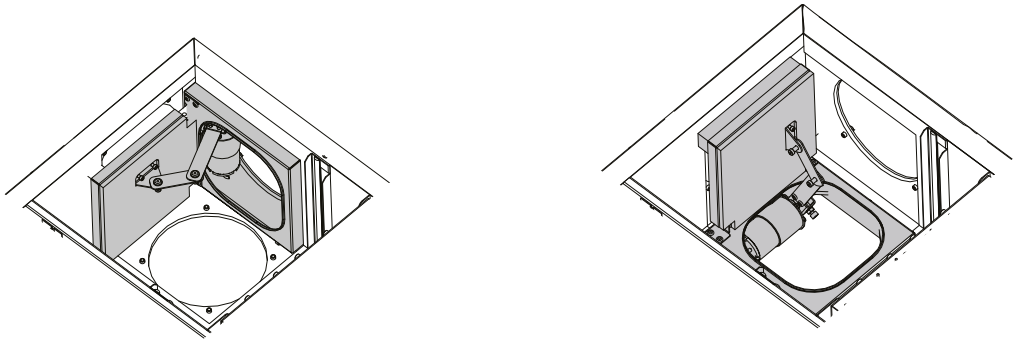

View from the service panel

Fix the damper with the screws.

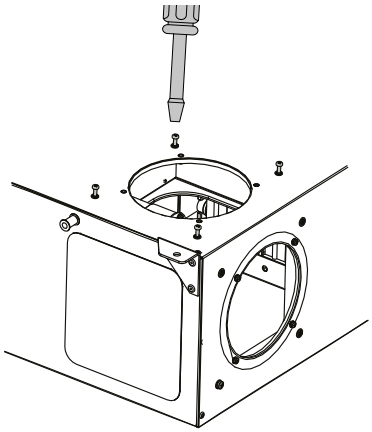

WARNING! Before installation operations route necessary cables and wires to the unit mounting place.
Fasteners for fan mounting are not included in the delivery set and should be ordered separately. While choosing fasteners consider the material of the mounting surface as well as the weigh of the unit, refer to the "Technical data" section. Fasteners for unit mounting should be selected by the service technician.
To get the best performance of the unit and to minimize turbulence-induced air pressure losses, connect the straight air duct section to all the unit spigots. Minimum straight air duct length: equal to 1 air duct diameter on intake side equal to 3 air duct diameters on outlet side.

Push the air ducts onto the flanges of the unit until stop. Flexible ducts must be fixed rigidly with a metal worming clamp.

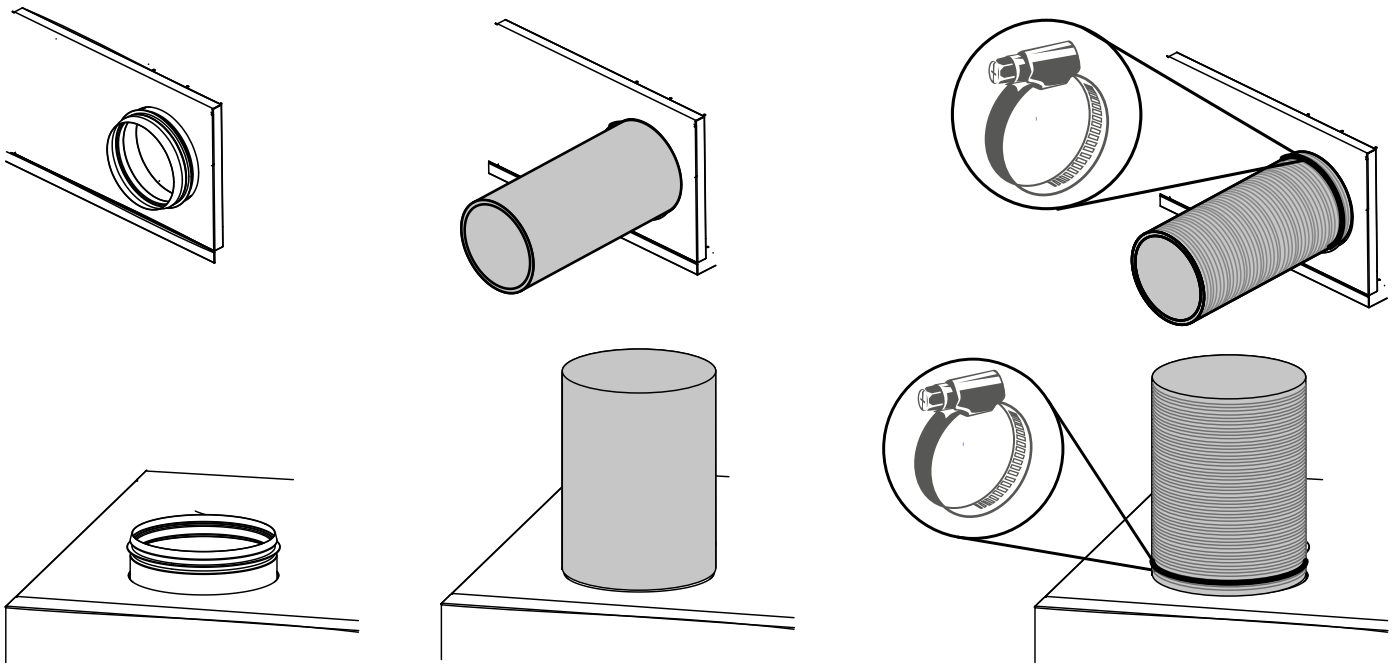

INSTALLATION

The unit can be installed under the ceiling or on the wall.
The unit can be mounted on threaded rods or anchor bolts. Mounting brackets for mounting the unit are included in the delivery set.
Depending on the spigot configuration, prepare the necessary holes for the ducts (Ø 150 mm) and fasteners in the ceiling or wall.
To prevent freezing of the wall, the air ducts must be thermally insulated. Ensure a minimum duct slope of 3° downwards towards the street.

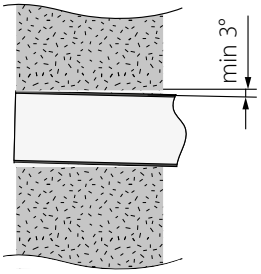

When installing through a suspended ceiling, provide openings for ductwork and/or stud bolts.

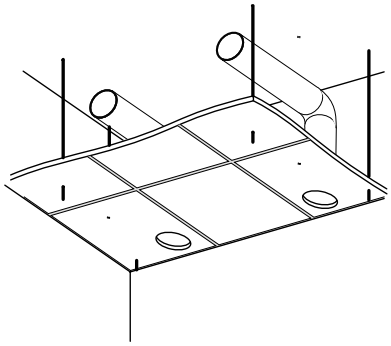

Unit fixing

Fixing to load-bearing surface

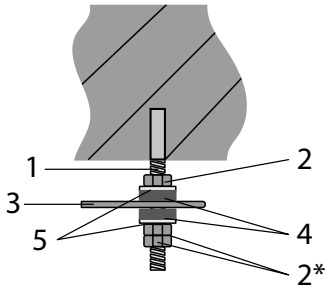

1 — M6 anchor bolt
2 — nut
3 — mounting bracket
4 — anti-vibration washer
5 — washer
** — make sure to use two nuts!*

Fixing through a suspended ceiling

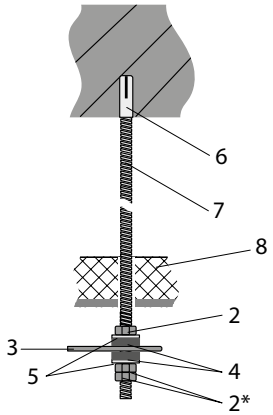

1 — M6 anchor bolt
2 — nut
3 — mounting bracket
4 — anti-vibration washer
5 — washer
6 — anchor sleeve M6
7 — threaded rod M6
8 — suspended ceiling
** — make sure to use two nuts!*

Fixing to the wall

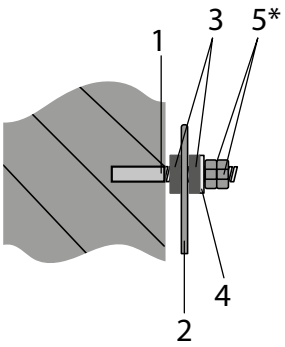

1 — M6 anchor bolt
2 — mounting bracket
3 — anti-vibration washer
4 — washer
6 — anchor sleeve M6
** — make sure to use two nuts!*

Installation options for Hybrid Max (E) (ERV) units*

Mounting through a suspended ceiling.
The recommended distance between the front grilles is at least 2000 mm

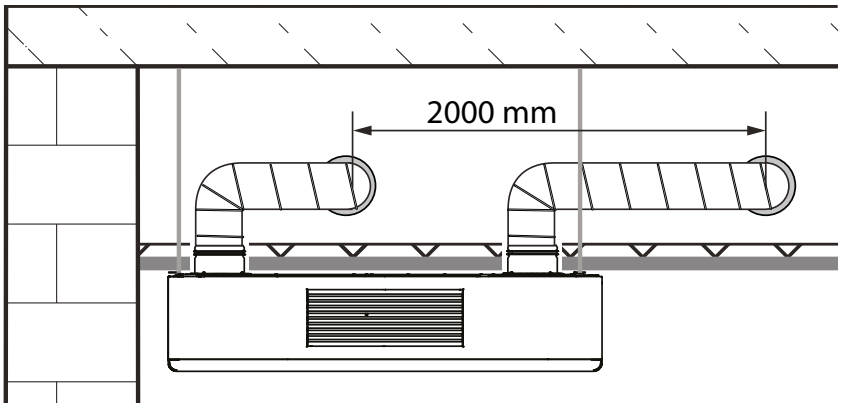

Mounting to a load-bearing surface. The spigots run through the outer wall

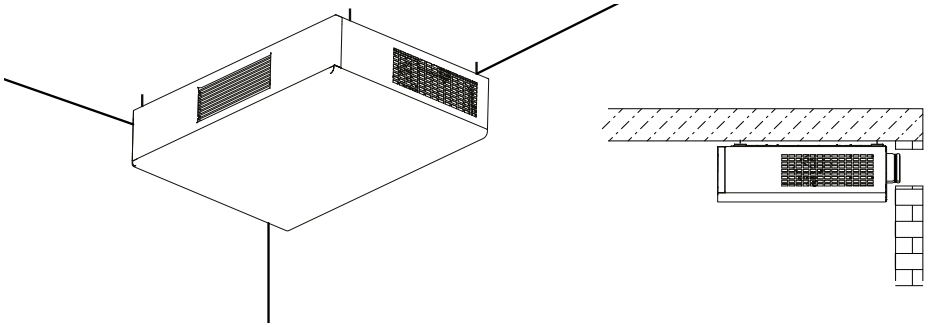

WARNING! Wall mounting of the units is only possible with the drain pipes facing downwards.

Horizontal mounting on an external wall

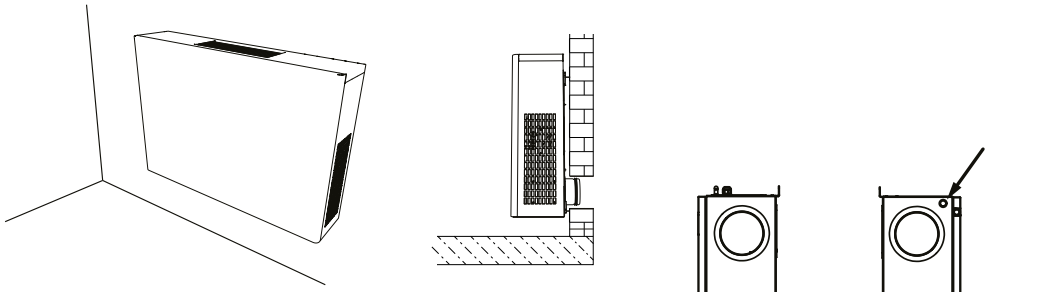

Vertical mounting on an external wall

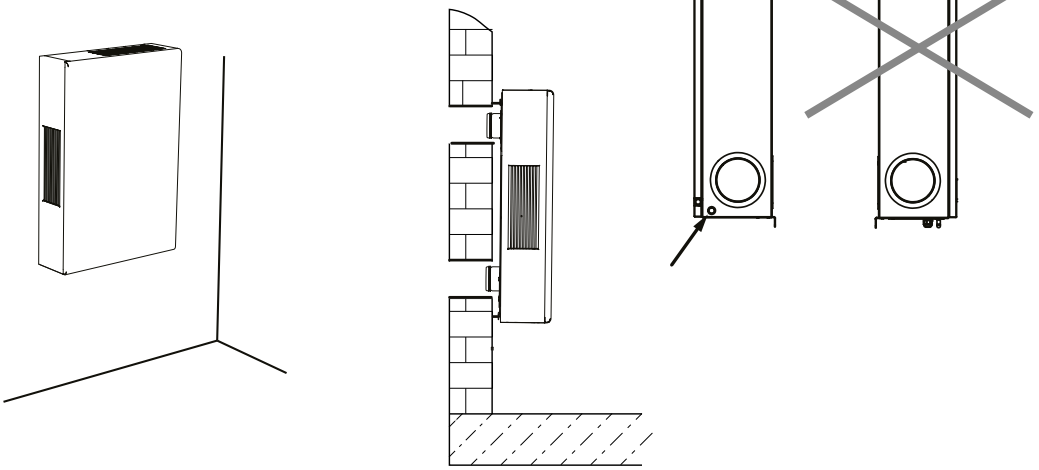

Installation options for Hybrid (ERV) units*

Mounting to a load-bearing surface behind a false ceiling

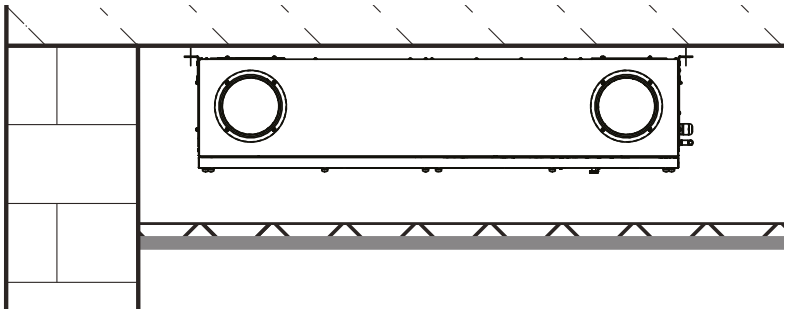

WARNING! Wall mounting of the units is only possible with the drain pipes facing downwards.

Vertical mounting on the wall. The spigots run through the outer wall

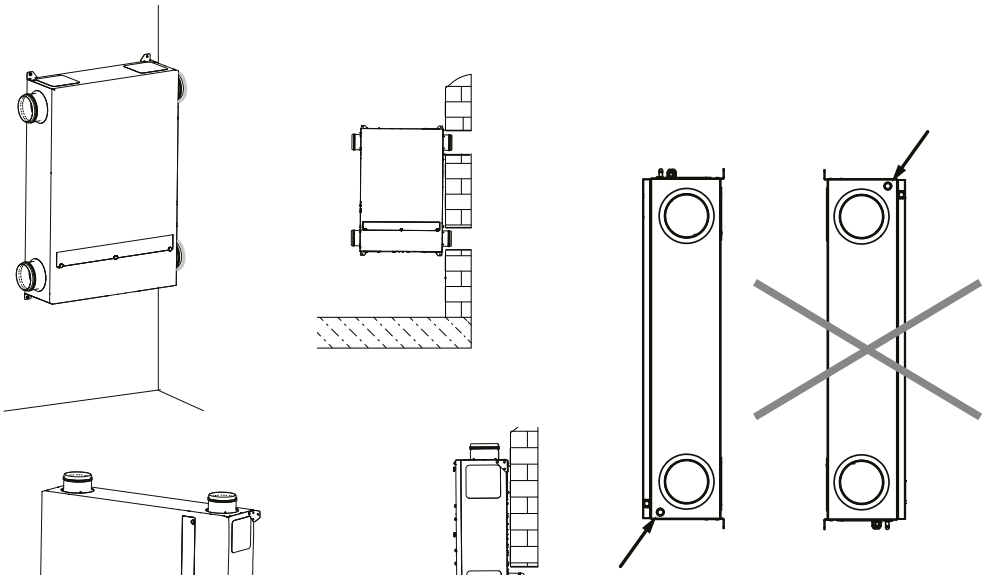

Vertical mounting on the wall. The spigots run through the outer wall

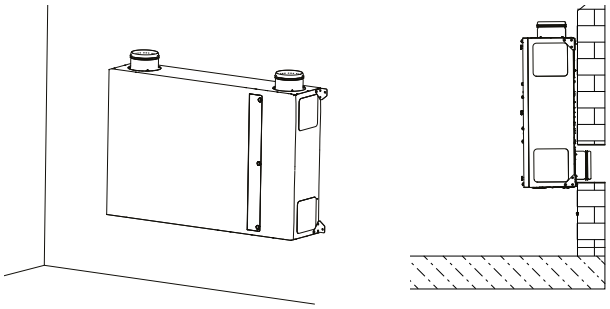

* Other installation options are possible depending on the selected spigot arrangement.

HUMIDITY SENSOR MOUNTING (NOT INCLUDED IN THE DELIVERY SET)

Fix the sensor in the exhaust air duct of the unit upstream of the heat exchanger. Connect the sensor connector to the connector with the cable of the control unit (installed by the manufacturer).

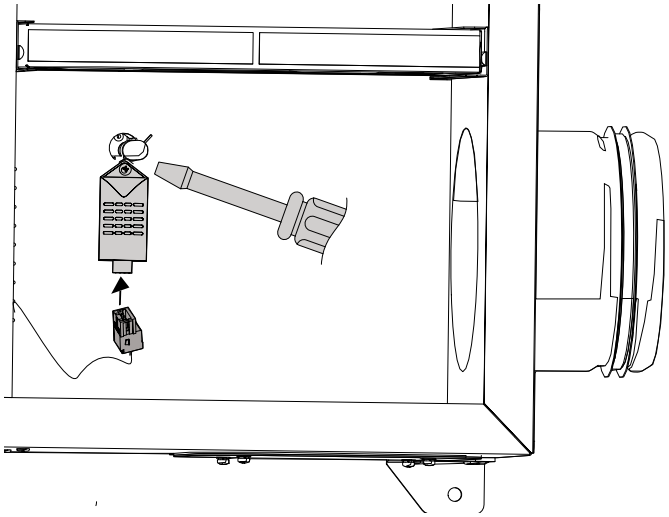

CO_2 SENSOR MOUNTING (NOT INCLUDED IN THE DELIVERY SET)

It must be installed in the exhaust duct upstream of the heat exchanger.

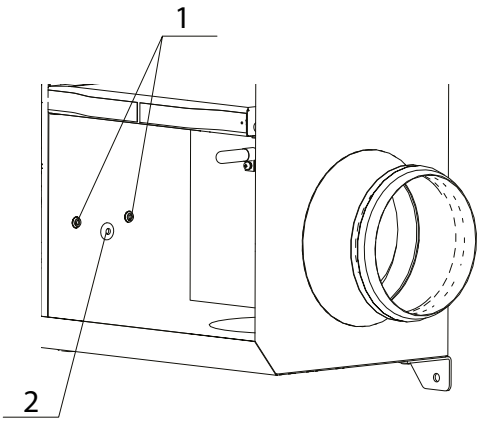

1 — threaded rivet for fixing the sensor
2 — bushing insulator for the sensor connection cable (for S21 automation the cable is factory-wired)

Units with S21 automation system

Take off the sensor cover. Connect it as shown in the wiring diagram supplied. Secure the sensor in the exhaust air duct. Close the sensor cover.

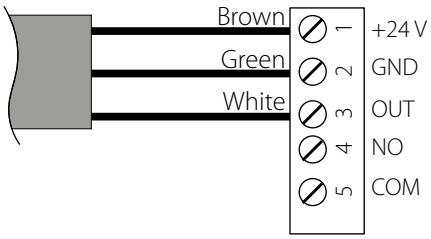

Units with S14 automation system

Connect a cable (available separately) to the controller. Lead the cable into the exhaust air duct upstream of the heat exchanger. Take off the sensor cover. Connect it as shown in the wiring diagram supplied. Secure the sensor in the exhaust air duct. Close the sensor cover.

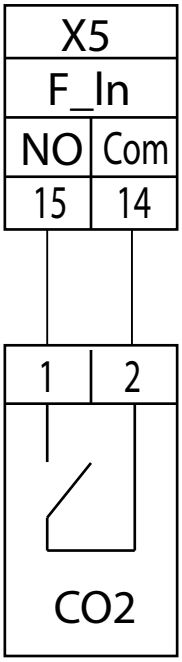

For Hybrid (ERV) units installed in a niche, behind a suspended ceiling or plasterboard, it is recommended to use inspection doors (not included in the delivery set, purchased separately) to close the opening and provide access for maintenance.

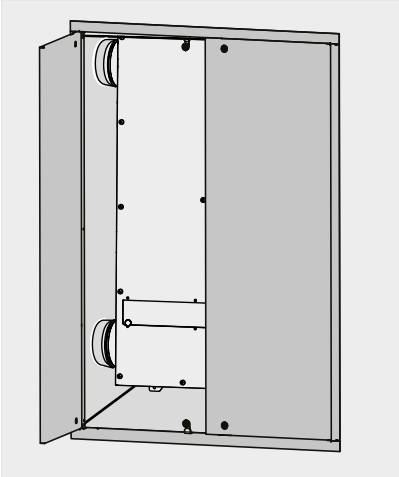

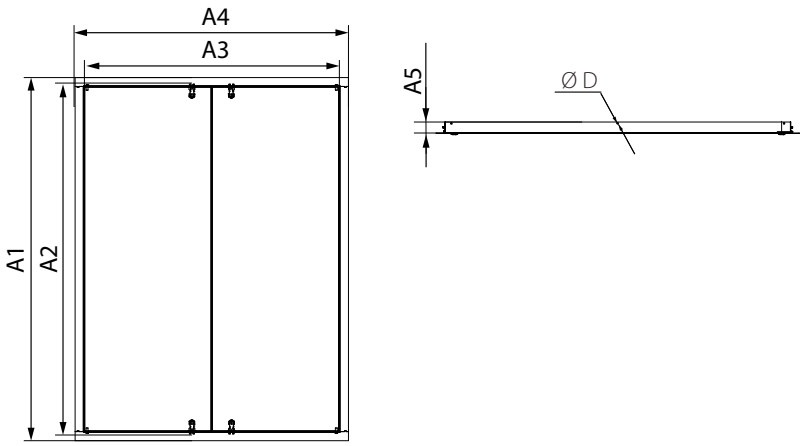

A1	A2	A3	A4	A5	D
1213	1160	850	913	38	5

CONDENSATE DRAINAGE

The Hybrid (Max) (E) series units require condensate drainage.
The units are equipped with drain pans and drain pipes (Ø16 mm) to collect and drain the condensate.

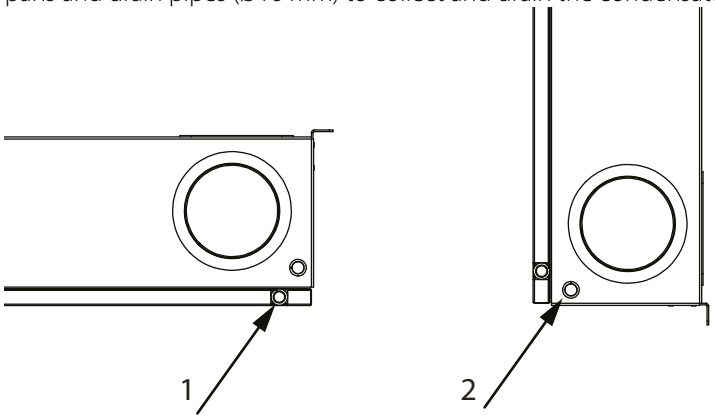

Location of the drain pipe for suspended (1) and wall-mounted (2) units

Remove the plug from the drain pipe. Connect the drain pipe to the sewage system using the U-trap kit (available upon separate order).
The U-trap must be constantly filled with water. The pipe slope downwards must be at least 3°.
Provide free drainage for the condensed water it is accumulated inside the unit that may cause the equipment damage and condensate outflow to the room.

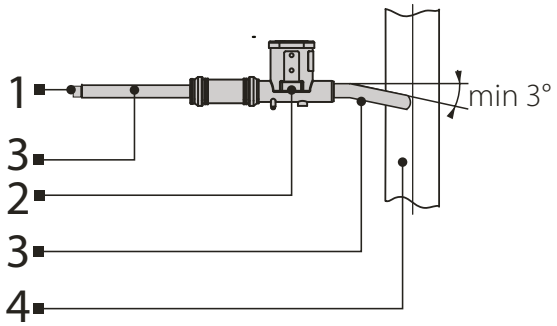

1 – drain pipe of the unit; 2 – U-trap; 3 – connecting pipe; 4 – sewage system.

The condensate drainage system is designed for normal operation in premises with air temperatures above 0 °C!
If the expected ambient air temperatures are below 0 °C, the condensate drainage system must be equipped with heat insulation and preheating facilities.
The Hybrid (Max) (E) ERV series units do not require condensate drainage as they are equipped with an enthalpy heat exchanger.

CONNECTION TO POWER MAINS

POWER OFF THE POWER SUPPLY PRIOR TO ANY OPERATIONS WITH THE UNIT.
THE UNIT MUST BE CONNECTED TO POWER SUPPLY BY A QUALIFIED ELECTRICIAN.
THE RATED ELECTRICAL PARAMETERS OF THE UNIT ARE GIVEN ON THE MANUFACTURER'S LABEL.

ANY TAMPERING WITH THE INTERNAL CONNECTIONS IS PROHIBITED AND WILL VOID THE WARRANTY.

DO NOT LAY THE CABLE IN CLOSE PROXIMITY TO THE CONTROL PANEL CABLE!
DO NOT COIL THE CABLE FROM THE CONTROL PANEL IN LOOPS WHILE LAYING IT.

The air-handling unit is rated for connection to single-phase AC 1~230 V/50 Hz power mains.
The unit must be connected to power mains using durable, insulated and heat-resistant conductors (cables, wires). The cross section of the conductors must correspond to the power input of the unit (see technical data). The actual conductor cross-section selection must be based on its type, maximum permissible heating, insulation, length and installation method.
The external power input must be equipped with an automatic circuit breaker built into the stationary wiring to open the circuit in the event of overload or short-circuit.
The position of the external automatic circuit breaker must ensure free access for quick power-off of the unit. The trip current must be in compliance with the consumption current, refer to Technical data.
To access the terminal block, remove the decorative cover (for Hybrid Max (E) (ERV)) and the service panel.
Route the cables to the control unit through the sealed cable glands in the unit.
Complete the electrical connections as shown in the external connections diagram.

EXTERNAL WIRING DIAGRAM FOR THE UNITS WITH S14 AUTOMATION

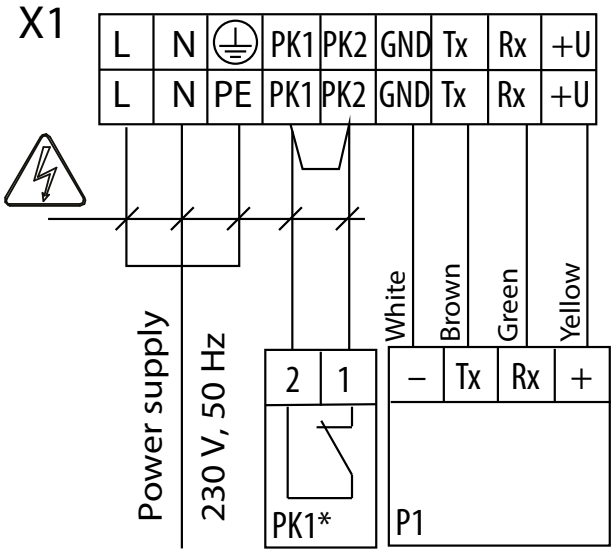

— ELECTRIC SHOCK HAZARD!

Designation	Name	Contact type	Cable type	Note
PK1*	Fire alarm panel	NC	2 x 0.75 mm²	Remove the jumper
P1	External control panel		4 x 0.25 mm²	

* Not included in the delivery set.

EXTERNAL WIRING DIAGRAM FOR THE UNITS WITH S21 AUTOMATION

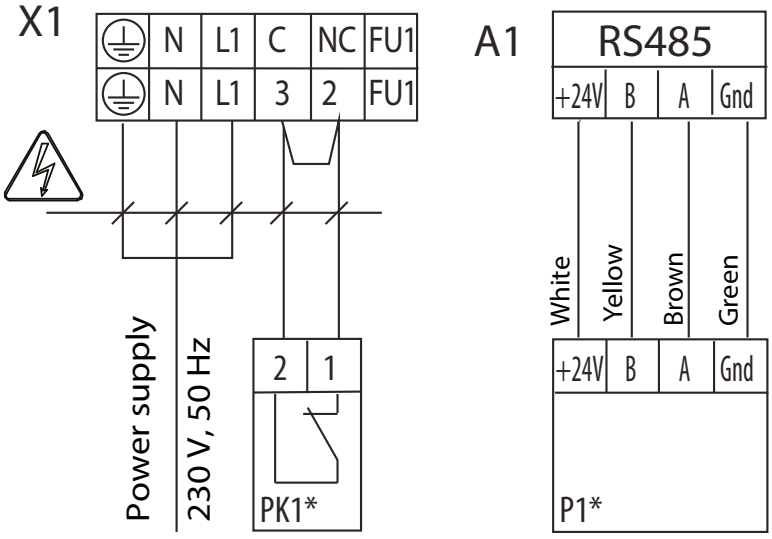

— ELECTRIC SHOCK HAZARD!

Designation	Name	Contact type	Cable type	Note
PK1*	Fire alarm panel	NC	2 x 0.75 mm²	Remove the jumper
P1	External control panel		4 x 0.25 mm²	

* Not included in the delivery set.

TECHNICAL MAINTENANCE

DISCONNECT THE UNIT FROM POWER SUPPLY BEFORE ANY MAINTENANCE OPERATIONS!

MAKE SURE THE UNIT IS DISCONNECTED FROM POWER MAINS BEFORE REMOVING THE PROTECTION

REMOVE THE FRONT PANEL NOT EARLIER THAN 20 SECONDS AFTER THE UNIT IS DISCONNECTED FROM THE POWER SUPPLY

Maintenance operations of the unit are required 3-4 times per year. They include general cleaning of the unit and the following operations:

1. Filter maintenance.

Dirty filters increase air resistance in the system and reduce supply air volume. The filters require cleaning not less than 3-4 times per year. To clean the filters, remove them from the unit. Dirty filters increase air resistance in the system and reduce supply air volume. The filters require cleaning not less than 3-4 times per year.

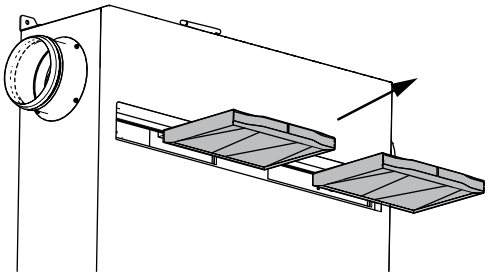

2. Heat exchanger maintenance (once per year).

Dust deposits can accumulate on the heat exchanger. To maintain high heat recovery efficiency, regular cleaning is required. To clean the heat exchanger, remove it from the unit and clean the heat exchanger by using compressed air or a vacuum cleaner. After cleaning, reinstall the heat exchanger into the unit.

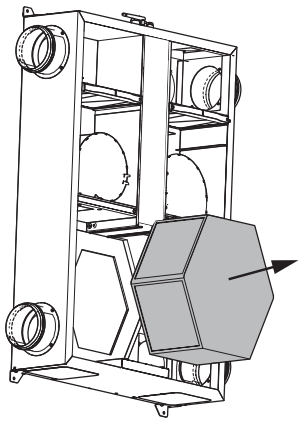

3. Fan maintenance (once per year).

Even in case of regular maintenance of the filters, some dust may accumulate inside the fans and reduce the fan performance and unit capacity. Clean the fans with a soft cloth, brush, or using compressed air. Do not use water, aggressive solvents, or sharp objects as they may damage the impeller.

4. Supply air flow control (twice per year).

The supply duct grille may get clogged with leaves and other objects reducing the unit performance and supply air delivery. Check the supply grille twice per year and clean it as required.

5. Ductwork system maintenance (once in 5 years).

Some dust may accumulate inside the air ducts which reduces the air quality and unit capacity.
Duct maintenance means regular cleaning or replacement.

TROUBLESHOOTING

IF UNIDENTIFIED NOISES OR ODOURS SHOULD ARISE AND IN CASE OF DEFORMATION OF ELEMENTS, VIBRATION, TERMINATION OF AIR SUPPLY/EXTRACTION OR REDUCED SYSTEM PERFORMANCE, IMMEDIATELY DISCONNECT THE UNIT FROM POWER SUPPLY AND CONTACT THE SELLER FOR THE UNIT DIAGNOSTICS

DIAGNOSTICS MUST BE CARRIED OUT BY QUALIFIED SPECIALISTS.

Problem	Possible reasons	Troubleshooting
When switching on the unit the fan(-s) do(-es) not start.	No power supply.	Make sure the power supply line is connected correctly, otherwise troubleshoot a connection error.
	The motor is jammed, the impeller blades are soiled.	Turn the unit off. Troubleshoot the motor jam and the impeller clogging. Clean the blades. Restart the unit.
	Alarm in the system.	Turn the unit off. Contact the Seller.
Tripping of the circuit breaker when the unit is turned on.	Overcurrent as a result of short circuit in the electric line.	Turn the unit off. Contact the Seller.
Low air flow.	Low set fan speed.	Set higher speed.
	The filters and the fans are clogged, the heat exchanger is clogged.	Clean or replace the filters, clean the fans and the heat exchanger.
	Ventilation system elements (air ducts, diffusers, louver shutters, grilles) are clogged, damaged or closed.	Clean or replace the ventilation system elements, such as air ducts, diffusers, louvre shutters, grilles.
Cold supply air.	The extract filter is clogged.	Clean or replace the extract filter.
Noise, vibration.	The impeller(-s) is(are) clogged.	Clean the impeller(s).
	The fan or casing screw connection is loose.	Tighten the screw connection of the fans or the casing all the way.
	No anti-vibration connectors on air duct pipe flanges.	Install anti-vibration connectors.
The control panel displays an alarm indicator ⚠ (only for the units with the S14 control panel).	Communication loss in connecting cable or wires between the control panel and the unit.	Check the power and connection cables and wires between the control panel and the air handling unit for integrity using a multimeter. If unassisted troubleshooting fails, please contact the product Seller.
	Wrong cable installing.	Make sure the cable installation is completed according to the requirements stated in the User's manual for the control panel. Otherwise, carry out cable routing as required.
	System alarm.	Contact the Seller.

STORAGE AND TRANSPORTATION REGULATIONS

- Store the unit in the manufacturer's original packaging box in a dry closed ventilated premise with temperature range from +5 °C to + 40 °C and relative humidity up to 70 %.
- Storage environment must not contain aggressive vapors and chemical mixtures provoking corrosion, insulation, and sealing deformation.
- Use suitable hoist machinery for handling and storage operations to prevent possible damage to the unit.
- Follow the handling requirements applicable for the particular type of cargo.
- The unit can be carried in the original packaging by any mode of transport provided proper protection against precipitation and mechanical damage. The unit must be transported only in the working position.
- Avoid sharp blows, scratches, or rough handling during loading and unloading.
- Prior to the initial power-up after transportation at low temperatures, allow the unit to warm up at operating temperature for at least 3-4 hours.

MANUFACTURER'S WARRANTY

The product is in compliance with EU norms and standards on low voltage guidelines and electromagnetic compatibility. We hereby declare that the product complies with the provisions of Electromagnetic Compatibility (EMC) Directive 2014/30/EU of the European Parliament and of the Council, Low Voltage Directive (LVD) 2014/35/EU of the European Parliament and of the Council and CE-marking Council Directive 93/68/EEC. This certificate is issued following test carried out on samples of the product referred to above.
The manufacturer hereby warrants normal operation of the unit for 24 months after the retail sale date provided the user's observance of the transportation, storage, installation, and operation regulations. Should any malfunctions occur in the course of the unit operation through the Manufacturer's fault during the guaranteed period of operation, the user is entitled to get all the faults eliminated by the manufacturer by means of warranty repair at the factory free of charge. The warranty repair includes work specific to elimination of faults in the unit operation to ensure its intended use by the user within the guaranteed period of operation. The faults are eliminated by means of replacement or repair of the unit components or a specific part of such unit component.

The warranty repair does not include:

- routine technical maintenance
- unit installation/dismantling
- unit setup

To benefit from warranty repair, the user must provide the unit, the user's manual with the purchase date stamp, and the payment paperwork certifying the purchase. The unit model must comply with the one stated in the user's manual. Contact the Seller for warranty service.

The manufacturer's warranty does not apply to the following cases:

- User's failure to submit the unit with the entire delivery package as stated in the user's manual including submission with missing component parts previously dismounted by the user.
- Mismatch of the unit model and the brand name with the information stated on the unit packaging and in the user's manual.
- User's failure to ensure timely technical maintenance of the unit.
- External damage to the unit casing (excluding external modifications as required for installation) and internal components caused by the user.
- Redesign or engineering changes to the unit.
- Replacement and use of any assemblies, parts and components not approved by the manufacturer.
- Unit misuse.
- Violation of the unit installation regulations by the user.
- Violation of the unit control regulations by the user.
- Unit connection to power mains with a voltage different from the one stated in the user's manual.
- Unit breakdown due to voltage surges in power mains.
- Discretionary repair of the unit by the user.
- Unit repair by any persons without the manufacturer's authorization.
- Expiration of the unit warranty period.
- Violation of the unit transportation regulations by the user.
- Violation of the unit storage regulations by the user.
- Wrongful actions against the unit committed by third parties.
- Unit breakdown due to circumstances of insuperable force (fire, flood, earthquake, war, hostilities of any kind, blockades).
- Missing seals if provided by the user's manual.
- Failure to submit the user's manual with the unit purchase date stamp.
- Missing payment paperwork certifying the unit purchase.

FOLLOWING THE REGULATIONS STIPULATED HEREIN WILL ENSURE A LONG AND TROUBLE-FREE OPERATION OF THE UNIT

USER'S WARRANTY CLAIMS SHALL BE SUBJECT TO REVIEW ONLY UPON PRESENTATION OF THE UNIT, THE PAYMENT DOCUMENT AND THE USER'S MANUAL WITH THE PURCHASE DATE STAMP

CERTIFICATE OF ACCEPTANCE

Unit Type	Air handling unit
Model	
Serial Number	
Manufacture Date	
Quality Inspector's Stamp	

SELLER INFORMATION

Seller	
Address	
Phone Number	
E-mail	
Purchase Date	
This is to certify acceptance of the complete unit delivery with the user's manual. The warranty terms are acknowledged and accepted.	
Customer's Signature	

Seller's Stamp

INSTALLATION CERTIFICATE

The _____ unit is installed pursuant to the requirements stated in the present user's manual.		
Company name		
Address		
Phone Number		
Installation Technician's Full Name		
Installation Date:	**Signature:**	
The unit has been installed in accordance with the provisions of all the applicable local and national construction, electrical and technical codes and standards. The unit operates normally as intended by the manufacturer.		
Signature:		

Installation Stamp

WARRANTY CARD

Unit Type	Air handling unit
Model	
Serial Number	
Manufacture Date	
Purchase Date	
Warranty Period	
Seller	

Seller's Stamp

BLAUBERG

www.blaubergventilatoren.de
B231EN-01