HEAT RECOVERY AIR HANDLING UNIT

Freshbox 100 WiFi

EN *USER'S MANUAL*

BLAUBERG Ventilatoren

CONTENTS

Safety requirements 2
Purpose 4
Delivery set 4
Designation key 4
Technical data 5
Design and operating principle 6
Installation and set-up 7
Connection to power mains 11
Control 12
Technical maintenance 22
Troubleshooting 23
Storage and transportation regulations 23
Manufacturer's warranty 24
Certificate of acceptance 25
Seller information 25
Installation certificate 25
Warranty card 25

This user's manual is a main operating document intended for technical, maintenance, and operating staff.
The manual contains information about the purpose, technical details, operating principle, design, and installation of the Freshbox 100 WiFi unit (-s) and all of its (their) modifications.
Technical and maintenance staff must have theoretical and practical training in the field of ventilation systems and should be able to work in accordance with workplace safety rules as well as construction norms and standards applicable in the territory of the country.
The information in this user's manual is correct at the time of the document's preparation.
The Company reserves the right to modify the technical characteristics, design, or configuration of its products at any time in order to incorporate the latest technological developments.
No part of this publication may be reproduced, stored in a retrieval system, or transmitted, in any form or by any means in any information search system or translated into any language in any form without the prior written permission of the Company.

SAFETY REQUIREMENTS

- Please read the user's manual carefully prior to installing and operating the unit.
- All user's manual requirements as well as the provisions of all the applicable local and national construction, electrical, and technical norms and standards must be observed when installing and operating the unit.
- The warnings contained in the user's manual must be considered most seriously since they contain vital personal safety information.
- Failure to follow the rules and safety precautions noted in this user's manual may result in an injury or unit damage.
- After a careful reading of the manual, keep it for the entire service life of the unit.
- While transferring the unit control, the user's manual must be turned over to the receiving operator.

UNIT INSTALLATION AND OPERATION SAFETY PRECAUTIONS

- Disconnect the unit from power mains prior to any installation operations.

- Unpack the unit with care.

- The unit must be grounded!

- While installing the unit, follow the safety regulations specific to the use of electric tools.

- Do not change the power cable length at your own discretion. Do not bend the power cable. Avoid damaging the power cable. Do not put any foreign objects on the power cable.

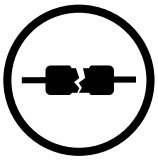

- Do not use damaged equipment or cables when connecting the unit to power mains.

- Do not touch the unit controls with wet hands. Do not carry out the installation and maintenance operations with wet hands.

- Do not allow children to operate the unit.

- Do not store any explosive or highly flammable substances in close proximity to the unit.

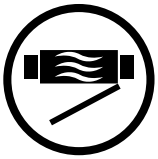

- Do not open the unit during operation.

- Do not block the air duct when the unit is switched on.

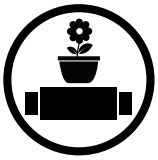

- Do not sit on the unit and avoid placing foreign objects on it.

- Do not lay the power cable of the unit in close proximity to heating equipment.

- Do not operate the unit outside the temperature range stated in the user's manual. Do not operate the unit in aggressive or explosive environments.

- Do not wash the unit with water. Protect the electric parts of the unit against ingress of water.

- Disconnect the unit from power mains prior to any technical maintenance.

- When the unit generates unusual sounds, odour, or emits smoke, disconnect it from power supply and contact the Seller.

- Do not direct the air flow produced by the unit towards open flame or ignition sources.

- In case of continuous operation of the unit, periodically check the security of mounting.

- Use the unit only for its intended purpose.

THE PRODUCT MUST BE DISPOSED SEPARATELY AT THE END OF ITS SERVICE LIFE.
DO NOT DISPOSE THE UNIT AS UNSORTED DOMESTIC WASTE.

PURPOSE

The unit is designed to ensure continuous mechanical air exchange in houses, offices, hotels, cafes, conference halls, and other utility and public spaces as well as to recover the heat energy contained in the air extracted from the premises to warm up the filtered stream of intake air.
The unit is not intended for organizing ventilation in swimming pools, saunas, greenhouses, summer gardens, and other spaces with high humidity.

THE UNIT SHOULD NOT BE OPERATED BY CHILDREN OR PERSONS WITH REDUCED PHYSICAL, MENTAL, OR SENSORY CAPACITIES, OR THOSE WITHOUT THE APPROPRIATE TRAINING.

THE UNIT MUST BE INSTALLED AND CONNECTED ONLY BY PROPERLY QUALIFIED PERSONNEL AFTER THE APPROPRIATE BRIEFING.

THE CHOICE OF UNIT INSTALLATION LOCATION MUST PREVENT UNAUTHORIZED ACCESS BY UNATTENDED CHILDREN.

Due to the ability to save heating energy by means of energy recovery, the unit is an important element of energy-efficient premises.
The unit is a component part and is not designed for stand-alone operation.
It is rated for continuous operation.
Transported air must not contain any flammable or explosive mixtures, evaporation of chemicals, sticky substances, fibrous materials, coarse dust, soot and oil particles or environments favourable for the formation of hazardous substances (toxic substances, dust, pathogenic germs).

DELIVERY SET

NAME	NUMBER
Air handling unit	1 pc.
User's manual	1 pc.
Mounting template	1 pc.
Installation kit	1 pc.
Magnetic sheet	1 pc.
Key	1 pc.
Spigot	1 pc.
Packing box	1 pc.

DESIGNATION KEY

Freshbox E - 100 ERV WiFi

WiFi — **Equipped with a Wi-Fi module**

ERV — **Heat exchanger type**
_ – by default
ERV – enthalpy

100 — **Rated air flow [m³/h]**

E — **Heater**
_ — without heater
E – preheating
E1 – reheating
E2 – preheating and reheating

Freshbox — **Series**

TECHNICAL DATA

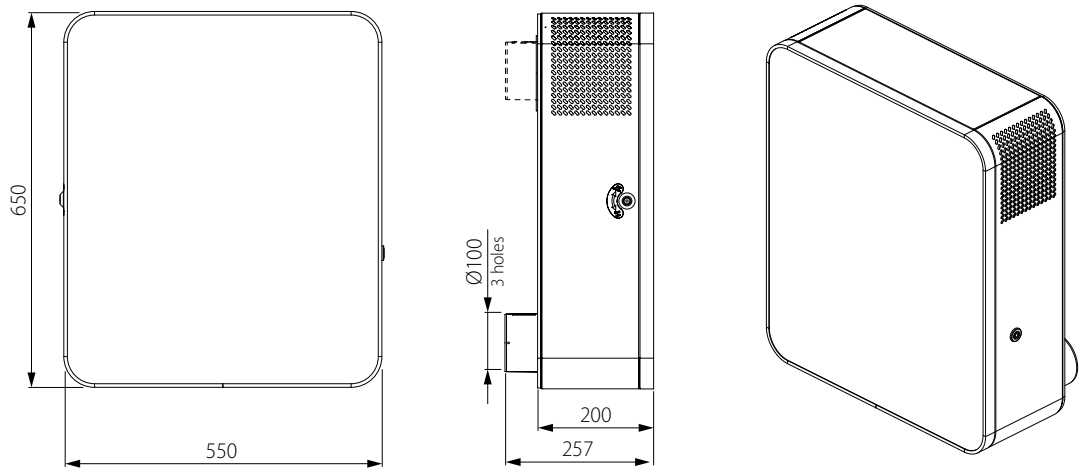

The unit is designed for indoor application with the ambient temperature ranging from +1 °C up to +40 °C and relative humidity up to 70%. In order to prevent condensation on the internal walls of the units, it is necessary that the surface temperature of the casing is 2-3 °C higher than the dew point temperature of the transported air.
The unit is rated as a Class I electrical appliance.
Hazardous parts access and water ingress protection rating:

- IP22 for the unit connected to the air ducts
- IP44 for the unit motors

The unit design is constantly being improved, thus some models may be slightly different from those described in this manual.

THE EXTRACT AIR TEMPERATURE SHOULD BE NO HIGHER THAN +40 ° C AND RELATIVE HUMIDITY SHOULD NOT EXCEED 70 % OVER THE ENTIRE TEMPERATURE RANGE.

Parameter		Freshbox 100 WiFi					Freshbox E-100 WiFi					Freshbox E1-100 WiFi					Freshbox E2-100 WiFi				
Speed		1	2	3	4	5	1	2	3	4	5	1	2	3	4	5	1	2	3	4	5
Maximum air capacity [m³/h]		30	44	60	75	100	30	44	60	75	100	30	44	60	75	100	30	44	60	75	100
Supply voltage [V/50 (60) Hz]		1~ 230																			
Maximum fan power [W]		20	23	29	37	53	20	23	29	37	53	20	23	29	37	53	20	23	29	37	53
Sound pressure level at 3 m distance [dBA]		13	20	27	33	39	13	20	27	33	39	13	20	27	33	39	13	20	27	33	39
Electric heater power [W]	preheating	-					600					-					600				
	reheating	-					-					350					350				
Maximum unit current [A]	without an electric heater	0.4					0.4					0.4					0.4				
	with an electric heater	-					3.08					1.94					4.67				
Transported air temperature [°C]		from -25 up to +40																			
Casing material		painted steel																			
Insulation		foam rubber, 10 mm																			
Heat recovery efficiency [%]		96	94	92	89	87	96	94	92	89	87	96	94	92	89	87	96	94	92	89	87
Heat exchanger type		counter-flow																			
Heat exchanger material		polystyrene																			
Supply filter		G4, F8 (option: F8 Carbon, H13)					G4, F8 (option: F8 Carbon, H13)					G4					G4				
Extract filter		G4																			
Connected air duct diameter [mm]		Ø 100																			
Weight [kg]		31					31					31					31				

Parameter		Freshbox 100 ERV WiFi					Freshbox E-100 ERV WiFi					Freshbox E1-100 ERV WiFi					Freshbox E2-100 ERV WiFi				
Speed		1	2	3	4	5	1	2	3	4	5	1	2	3	4	5	1	2	3	4	5
Maximum air capacity [m³/h]		30	44	60	75	100	30	44	60	75	100	30	44	60	75	100	30	44	60	75	100
Supply voltage [V/50 (60) Hz]		1~ 230																			
Maximum fan power [W]		20	23	29	37	53	20	23	29	37	53	20	23	29	37	53	20	23	29	37	53
Sound pressure level at 3 m distance [dBA]		13	20	27	33	39	13	20	27	33	39	13	20	27	33	39	13	20	27	33	39
Electric heater power [W]	preheating	-					600					-					600				
	reheating	-					-					350					350				
Maximum unit current [A]	without an electric heater	0.4					0.4					0.4					0.4				
	with an electric heater	-					3.08					1.94					4.67				
Transported air temperature [°C]		from -25 up to +40																			
Casing material		painted steel																			
Insulation		foam rubber, 10 mm																			
Heat recovery efficiency [%]		96	94	92	89	87	96	94	92	89	87	96	94	92	89	87	96	94	92	89	87
Heat exchanger type		counter-flow																			
Heat exchanger material		enthalpy membrane																			
Supply filter		G4, F8 (option: F8 Carbon, H13)					G4, F8 (option: F8 Carbon, H13)					G4					G4				
Extract filter		G4																			
Connected air duct diameter [mm]		Ø 100																			
Weight [kg]		31					31					31					31				

DESIGN AND OPERATING PRINCIPLE

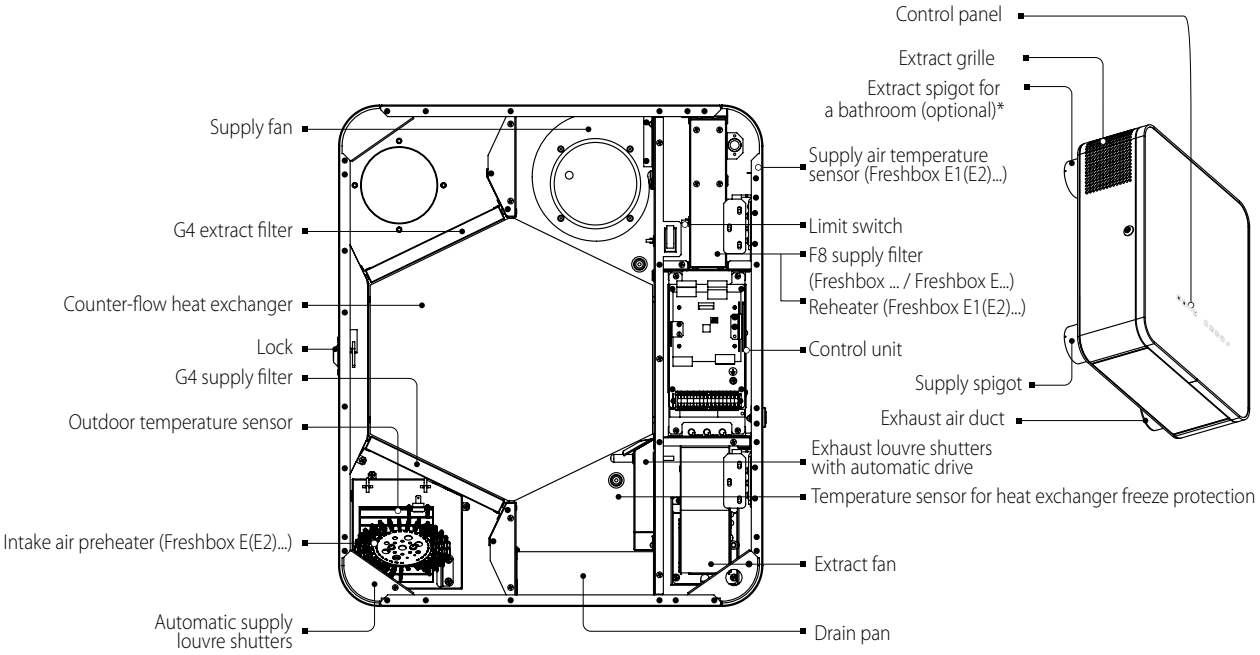

Warm stale extract air from the room flows to the unit, where it is filtered by the extract filter, then air flows through the heat exchanger and is exhausted outside by the extract fan.
Cold fresh air from outside flows into the unit, where it is cleaned by the supply filter. Then filtered air flows through the heat exchanger and is moved to the room with the supply fan.
Thermal energy of warm extract air is transferred to clean intake fresh air from outside and warms it up. The air flows are fully separated.
Heat recovery minimizes heat losses, which reduces the cost of space heating in the cold season.
Depending on the model the unit is equipped with a supply air preheater or reheater with overheating protection.

The Freshbox E-100 WiFi, Freshbox E2-100 WiFi units are equipped with a preheater.
The preheater is located upstream of the heat exchanger and is designed for its freeze protection.
The Freshbox E1-100 WiFi, Freshbox E2-100 WiFi units are equipped with a reheater.
The reheater is located downstream of the heat exchanger and is designed for extra heating of supply air to more comfortable temperature.
When the intake air temperature is below -3 °C, the preheater automatically warms up intake air so the average exhaust air temperature downstream of the heat exchanger is not below +5 °C.
The reheater is switched on and off by means of a button on a sensor control panel, a remote control or via mobile application.
The heat exchanger freeze protection in Freshbox 100 WiFi and Freshbox E1-100 WiFi unit models without a preheater is achieved by automatic supply fan speed reduction according to extract air sensor readings.
The extract fan runs at maximum speed.
Temperature differences between supply and extract air flows in units with polystyrene heat exchangers lead to condensate formation.
Condensate is collected in the drain pan and is removed outside by the drain pipes through the exhaust air duct.
Condensate is not formed in units equipped with an enthalpy heat exchanger as moisture is transferred from one air flow to another through a membrane.
The louvre shutters open automatically when the motors are switched on and close when the motors are switched off.
*An additional extract spigot can be fitted to the unit to connect the exhaust air duct from additional premises, e.g. a bathroom.
The spigot is included in the delivery set.

INSTALLATION AND SET-UP

READ THE USER'S MANUAL BEFORE INSTALLING THE UNIT.

WHILE INSTALLING THE UNIT ENSURE CONVENIENT ACCESS FOR SUBSEQUENT MAINTENANCE AND REPAIR.

Minimum distances from the unit to the surfaces

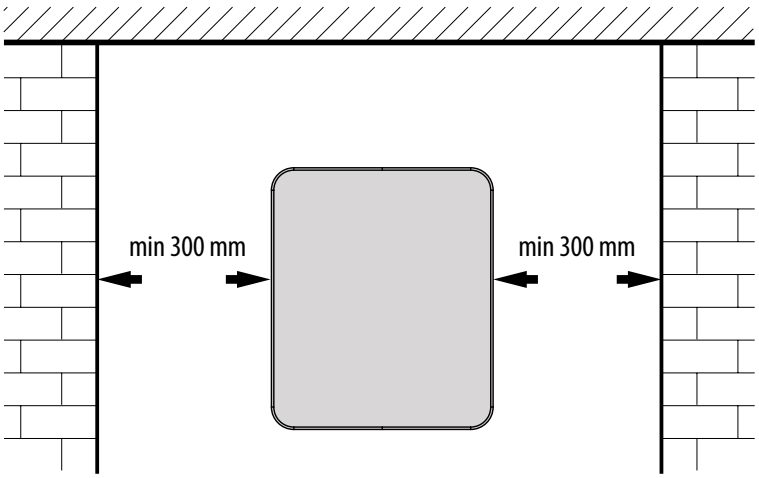

Hole spacing template

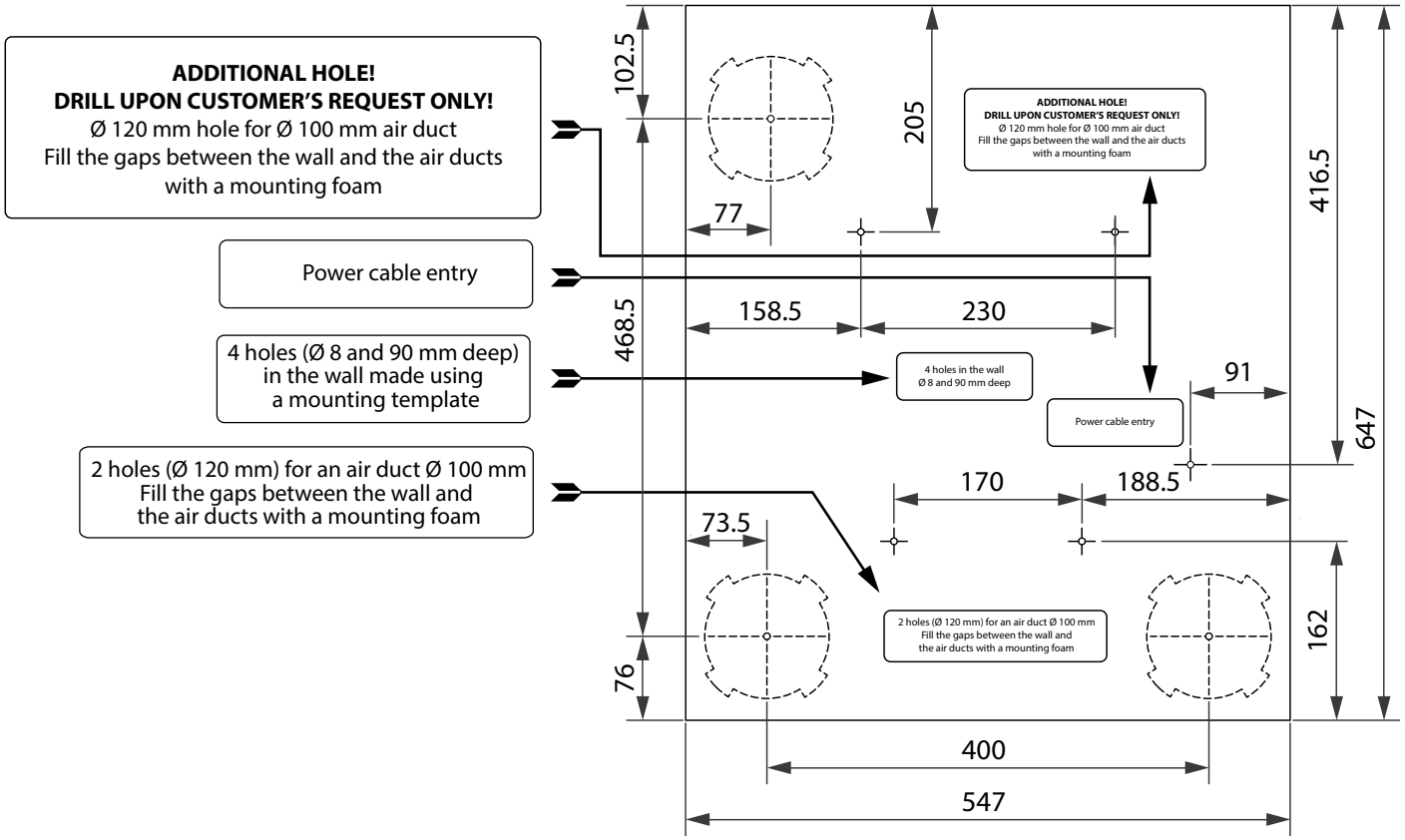

Unit mounting

BEFORE MOUNTING MAKE SURE THE CASING DOES NOT CONTAIN ANY FOREIGN OBJECTS (E.G. FOIL, PAPER).

THE UNIT MUST BE MOUNTED ON A PLANE SURFACE.
MOUNTING OF THE UNIT TO AN UNEVEN SURFACE CAN LEAD TO THE UNIT CASING DISTORTION AND OPERATION DISTURBANCE.

1. Mark and drill holes in the wall using a mounting template.
Fix the mounting template at the required level on the wall with a self-adhesive tape.
Using a mounting template make marks to drill holes for air ducts, for unit mounting and for power cable entry.
Before installation operations route necessary cables and wires to the unit mounting place.

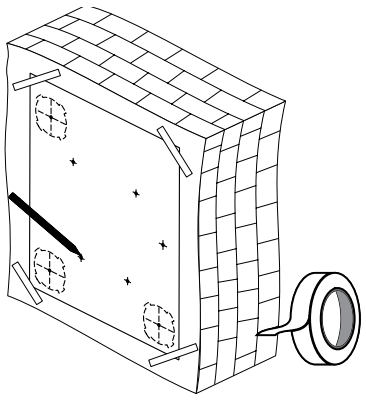

2.1. Remove the mounting template and drill two through holes Ø 120 mm for round air ducts.
When mounting the unit with an additional extract spigot prepare a hole in the wall for a connecting bend and for laying of a rectangular air duct.
A connecting bend, rectangular and round air ducts are available separately. Drill holes (Ø 8 mm, 90 mm deep) to mount the unit. Install the expansion anchors, remove the perforated fillers for the air ducts from the mounting template and install the mounting template back using a self-adhesive tape.

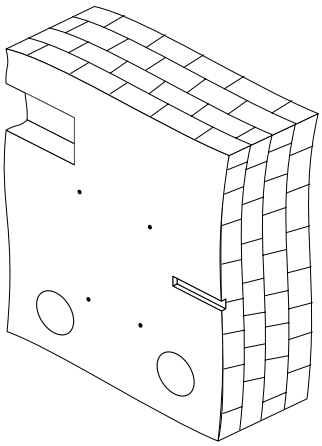

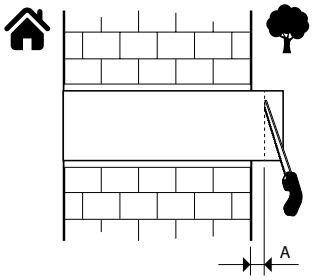

2.2. Cut air ducts of required length. Note that the telescopic air duct end must protrude for the distance that enables installation of the outer ventilation hood. For details, refer to the installation instruction for the ventilation hood.
The outer ventilation hood is available separately.

3. Fix the mounting template on the wall to install the air ducts.
Insert the air ducts in the corresponding holes of the mounting template.
Install the air duct with the minimum slope of 3 mm for condensate removal.
To install the unit with an additional spigot, insert the connecting bend into the prepared hole in the wall, aligning the mounting template hole with a round end of the connecting bend.
Connect a rectangular duct to the connecting bend.

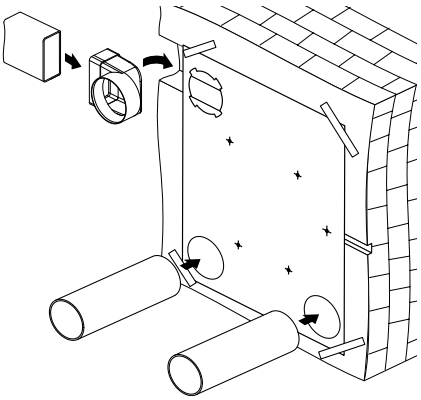

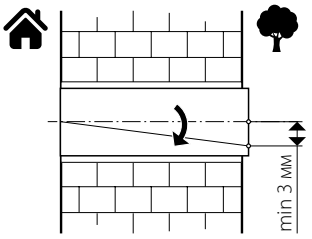

4. Fill the spaces between the air ducts and the wall with a mounting foam through the specially designed holes in the mounting template.
Wait till the mounting foam hardens then take off the mounting template and remove the foam excess.
Cut off the protruding air duct parts to be flush with the wall surface.

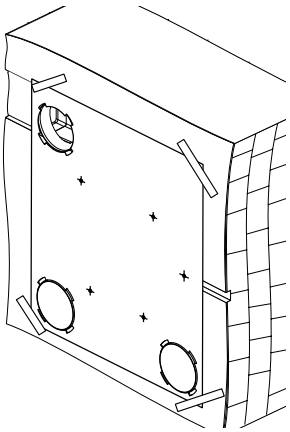

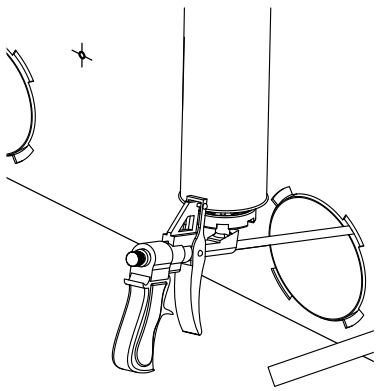

5. To install an additional extract spigot, remove the plug on the rear part of the unit.
Undo the screws, remove the plug and fix a spigot on its place using screws.

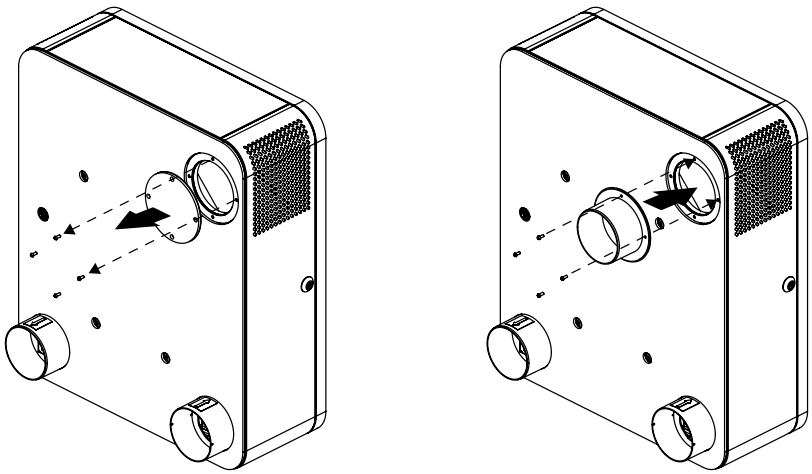

6. Fix the unit on the wall:
- Open the unit and remove the heat exchanger.
- Lift the unit, insert the drain pipe and unit spigots into the corresponding wall-mounted air ducts.

CAUTION! REMOVE THE MAGNETIC PLUG FROM THE EXHAUST GRILLE IF AN ADDITIONAL EXTRACT SPIGOT IS NOT INSTALLED.

- Fix the unit on the wall using the supplied screws and expansion anchors.
- Install the heat exchanger back and close the unit door.

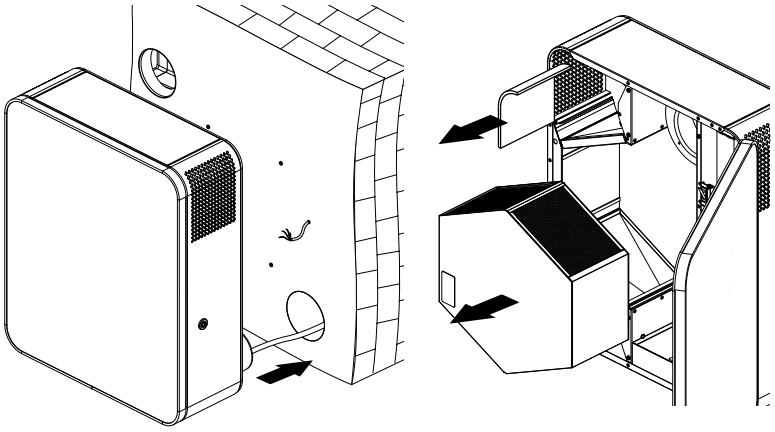

7. Install the outer ventilation hood:
- Cut a part of the drain pipe protruding outside to a length not more than 10 mm.
- Remove the foam excess.
- Fill the gaps between the air ducts with sealant.
- Fix the outer hood on the outer wall of the building (see the ventilation hood installation manual).

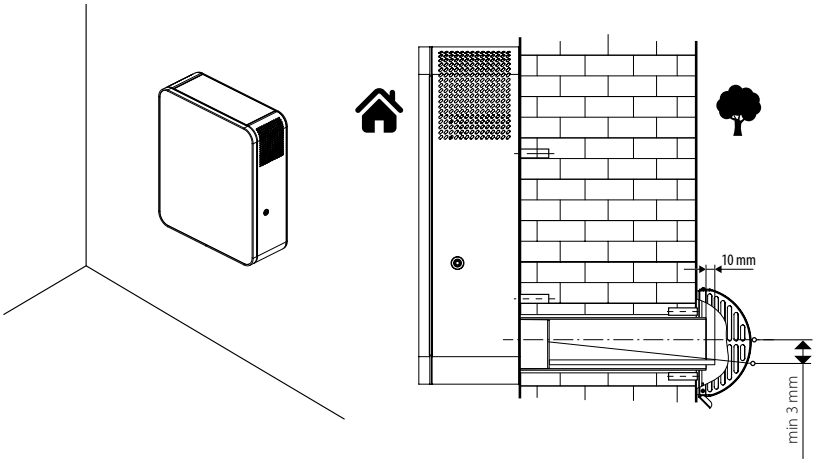

CONNECTION TO POWER MAINS

POWER OFF THE POWER SUPPLY PRIOR TO ANY OPERATIONS WITH THE UNIT.
THE UNIT MUST BE CONNECTED TO POWER SUPPLY BY A QUALIFIED ELECTRICIAN.
THE RATED ELECTRICAL PARAMETERS OF THE UNIT ARE GIVEN ON THE MANUFACTURER'S LABEL.

- The unit is rated for connection to 1~230 V/50 (60) Hz power mains.
- The unit must be connected to power mains using insulated electric conductors (cables, wires). The actual wire cross section selection must be based on the maximum load current, maximum conductor temperature depending on the wire type, insulation, length and installation method.
- The external power input must be equipped with an automatic circuit breaker built into the stationary wiring to open the electric circuit in case of overload or short-circuit. The circuit breaker installation place must provide quick access for emergency shutdown of the unit. The trip current of the automatic circuit breaker **QF** must exceed the maximum current consumption of the unit (refer to the technical data table). The recommended trip current of the circuit breaker is the next current in the standard trip current row following the maximum current of the connected unit. The automatic circuit breaker is not included in the delivery set.

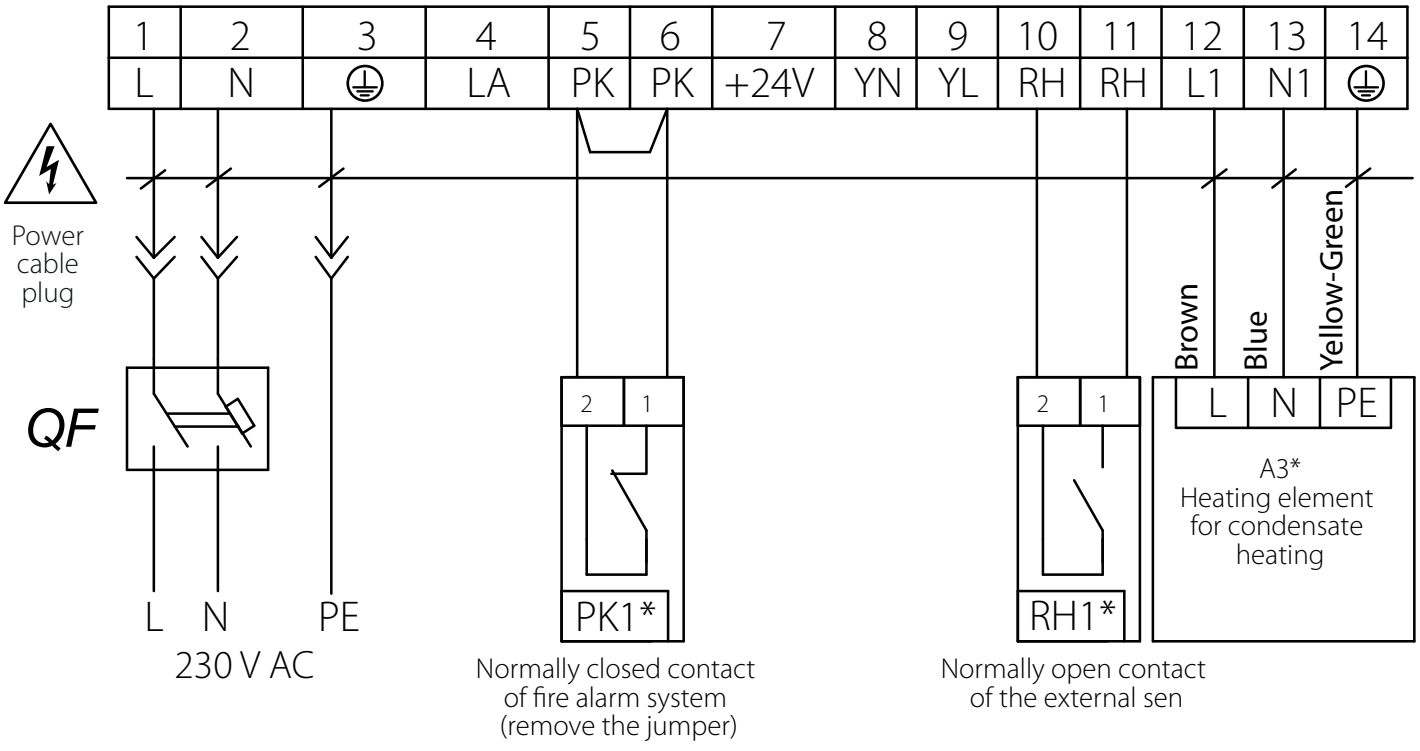

Designation	Name	Type	Cable
PK1*	Contact from fire alarm panel	N.C.	2x0,25 mm²
RH1*	External sensor contact	N.O.	2x0,25 mm²
A3*	Heating element for condensate heating		3x0,75 mm²

⚠ - Electric shock hazard!

* not included in the delivery set.

CONTROL

The unit is controlled by means of a control panel on the unit casing, a remote control or via mobile application.

Control panel

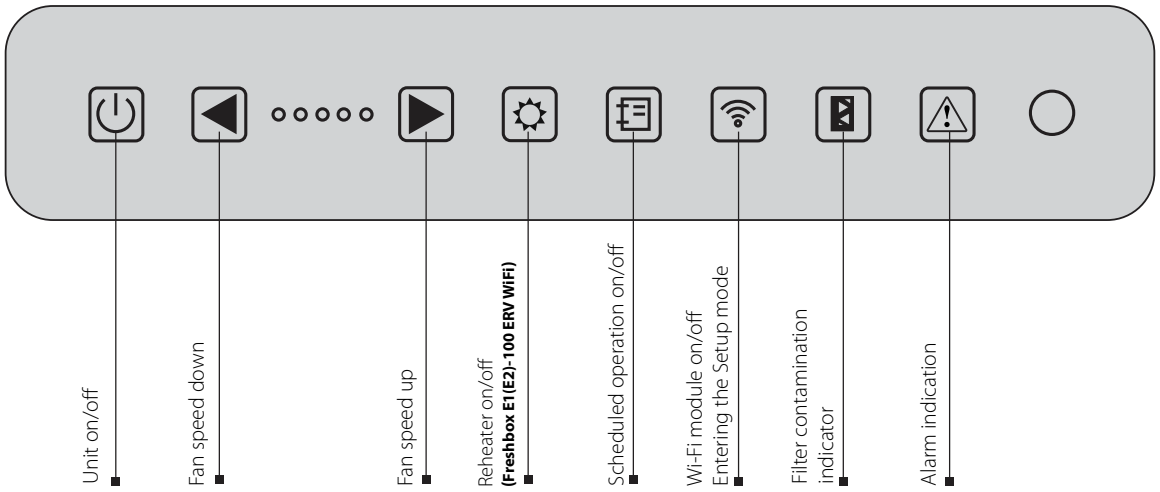

1. The unit is switched on/off using .

2. Ventilation modes can be controlled by the and buttons.

The and buttons change the ventilation mode within five speeds.

Pressin and simultaneously for more than 3 seconds switches the timer on/off. The time of the timer and the speed to which the installation proceeds while the timer is running is adjusted via the mobile application.

3. The reheater is switched on/off using .

4. The weekly schedule can be switched on/off by pressing the button.

For this mode, the time must be correctly set via the mobile application.

By default, the controller stores a weekly schedule with factory settings.

The button for switching on the weekly schedule blocks the buttons for changing speeds and switching the reheating on/off.

5. The Wi-Fi module is switched on/off using .

Switch the Wi-Fi module on/off by pressing . If the button is held down for more than 5 seconds, its backlight flashes and the controller goes to the «**Setup Mode**» (for more information on this mode, see page 16).

6. At the end of the filters' service life, the filter replacement indicator on the control panel will light up notifying that filters need to be changed.

CAUTION! After switching off the unit with the heater running, the fans continue to operate in order to cool the heater. The turn-off delay time of the fans is 0.5-2 minutes depending on the unit model.

7. In emergency situations, the unit turns off and the ⚠ indicator flashes an alarm code.

Alarm code	Alarm description
4 long flashes	Outdoor sensor is missing
3 long, 1 short flash	Outdoor sensor short circuit
2 long, 1 short, 1 long flash	Sensor downstream of the heat exchanger is missing
2 long, 2 short flashes	Short circuit of the sensor downstream of the heat exchanger
1 long, 1 short, 2 long flashes	Exhaust sensor is missing
1 long, 1 short, 1 long, 1 short flash	Exhaust sensor short circuit
1 long, 2 short, 1 long flash	Connection error
1 long, 3 short flashes	Low battery
1 short, 1 long, 1 short, 1 long flash	Wi-Fi initialization error

You may find a detailed alarm description in a mobile application.

Remote control

Freshbox (E)-100 WiFi

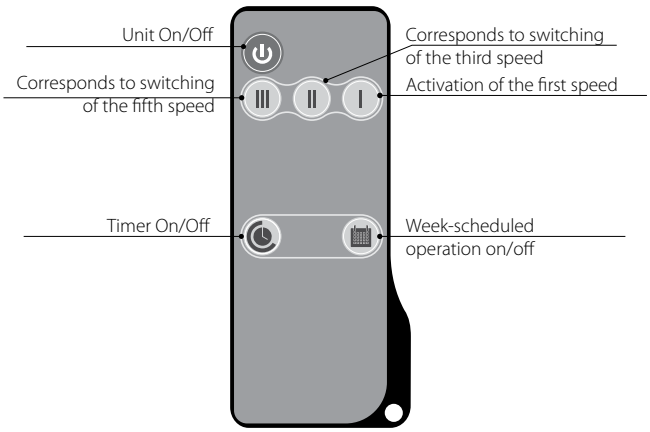

Freshbox E1(E2)-100 WiFi

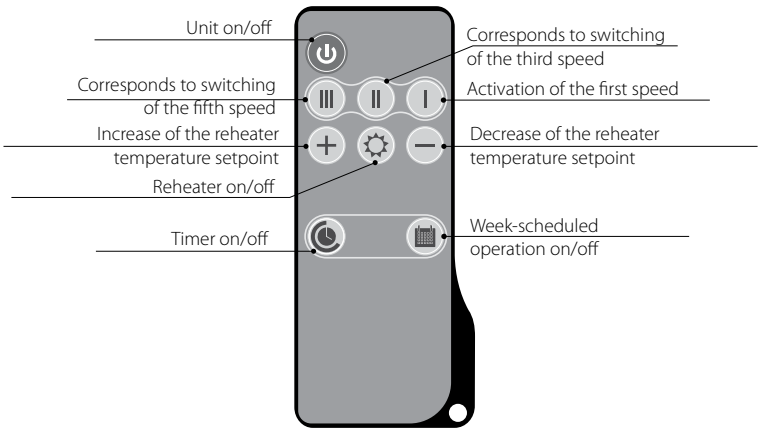

Unit control via the application on the mobile device

The application Blauberg Freshbox is available for download at App Store //itunes.apple.com/us/app/blauberg-freshbox/id1402506523 or Play Market https://play.google.com/store/apps/details?id=com.embarcadero.BlaubergFRESHBOX or via QR codes.

App Store download link

Play Market download link

Wi-Fi technical data

Standard	IEFE 802,11, b/g/n
Frequency band [GHz]	2.4
Transmission power [mW] (dBm)	100(+20)
Network	DHCP
WLAN safety	WPA, WPA2

Following message is displayed if launching an application without connection to the unit:

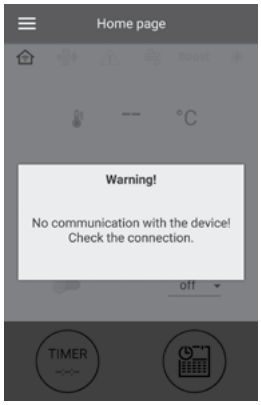

After installing the application, connect the mobile device to the unit as to a Wi-Fi access point (**FAN: + 16 characters of the ID number**) indicated on the control board and on the unit casing.
By default, the Wi-Fi access point password is 11111111 (eight ones).

Run the installed application on the mobile device connected to the unit.

- Select a desired connection type.
- Enter the app menu .
- Select **CONNECTION - AT HOME**.
- If the mobile device is connected to the Wi-Fi access point of the unit without a router, select the Default connection.
- If you are connecting via a router, search for devices in the network by pressing the button.
- Select the connection with the required ID number.
- Edit the connection details by pressing .
- If necessary, re-name the connection and enter a unit password (characters allowed: 0…9, a…z, A…Z).
- By default the unit password is **1111** (four ones).
- Confirm the updated details by pressing .

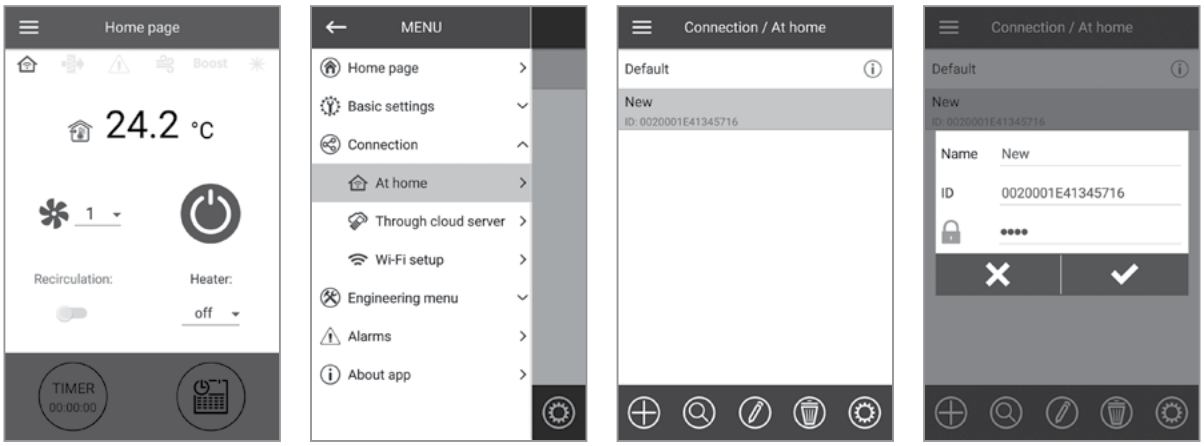

Unit password change

- Go to **Menu (☰) - Connection - At home.**
- Choose the connection and press ⚙.
- Enter and confirm the password. Characters allowed: 0…9, a…z, A…Z.
- Press the "**Change Password**" button.

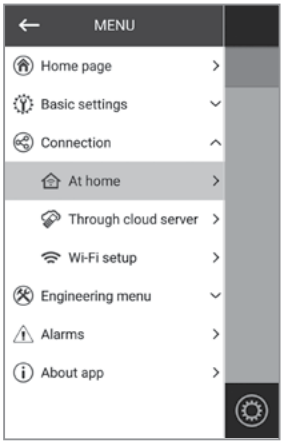

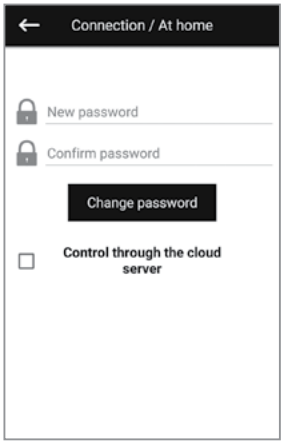

Wi-Fi parameter setup

Go to the application menu on your mobile device **Menu (☰) - Connection – Wi-Fi setup.**

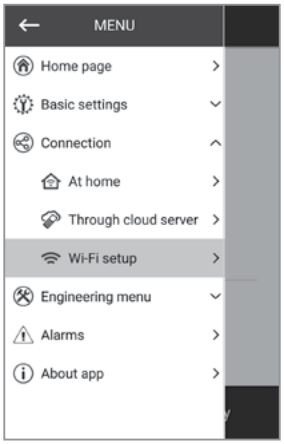

Then press **Receive**. The screen will display the current Wi-Fi parameter settings.
Select one of the Wi-Fi operation modes: **Access Point** or **Client**.

Access Point: access point mode without a home router.
Up to 8 devices can be connected to the unit in this mode.
Select the desired security level for the **Access point** mode:
Open: without a password.
WPA PSK: password-protected.
WPA2 PSK: password-protected.
WPA/WPA2 PSK: password-protected (recommended).

Enter your access point password.
Change the Wi-Fi channel if necessary.
Press the **APPLY** button.

Client – the unit operates on the home router network.
Enter the home router details and the IP address type for the **Client** mode:

- Enter the name of the Wi-Fi home router access point.
- Enter the password for the Wi-Fi home router access point.

Select an IP address type:
DHCP: the IP address is set up automatically upon connection to the home router (recommended).
Static: enables manual entry of the desired IP address, subnet mask and default gateway. These settings are recommended for expert users only.
Select this IP address type at your own risk.
Then press the **APPLY** button.

Special Setup mode
In the event of losing the Wi-Fi password or the unit password, connecting external devices or in other cases use the special **Setup mode** to restore access to the unit functions.
To enter the special Setup mode, press and hold the Wi-Fi button on the control panel for 5 seconds before the LED on the button starts flashing.
The unit will continue in this mode for 3 minutes and then automatically revert to the previous settings.
To immediately exit the Setup mode, press and hold the button again for 5 seconds until the LED on the button stops flashing.
To connect to the unit in the **Setup Mode**, the following parameters are available:
Wi-Fi name: Setup mode.
Wi-Fi password: 11111111.
The unit password is ignored.

Cloud server connection
The units can be controlled using the mobile app via a cloud server connection. This function allows controlling the unit that is connected to the home router, at any remote location via the Internet. By default the Control via cloud server function is disabled.
To enable the function:

- Select **CONNECTION - AT HOME**.
- Select the desired unit connection.
- Enter the connection settings menu.
- Enable control **Through cloud server**.

WARNING! With this function enabled any loss of Internet connection provided by the home server may result in temporary loss of communication with the unit.

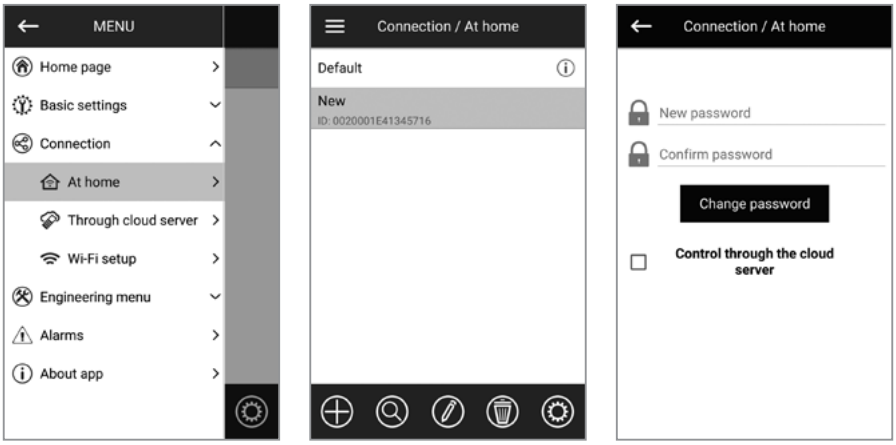

Create a new account or login to a previously created to manage the unit.

Open the mobile app and go to **MENU** -> **CONNECTION** -> **THROUGH CLOUD SERVER:**

- Press the **ADD NEW ACCOUNT** button.
- Enter a login, a password and an e-mail address for password recovery. Confirm the updated details by pressing .
- Follow the link sent to the e-mail.
- Enter your login and password to enter your account.
- Add a new connection by clicking the button.
- Enter an arbitrary unit name, its ID number (indicated on the control board and the casing of the unit), and also the device password (default: 1111).
- Confirm the updated details by pressing .
- To exit the account, press .

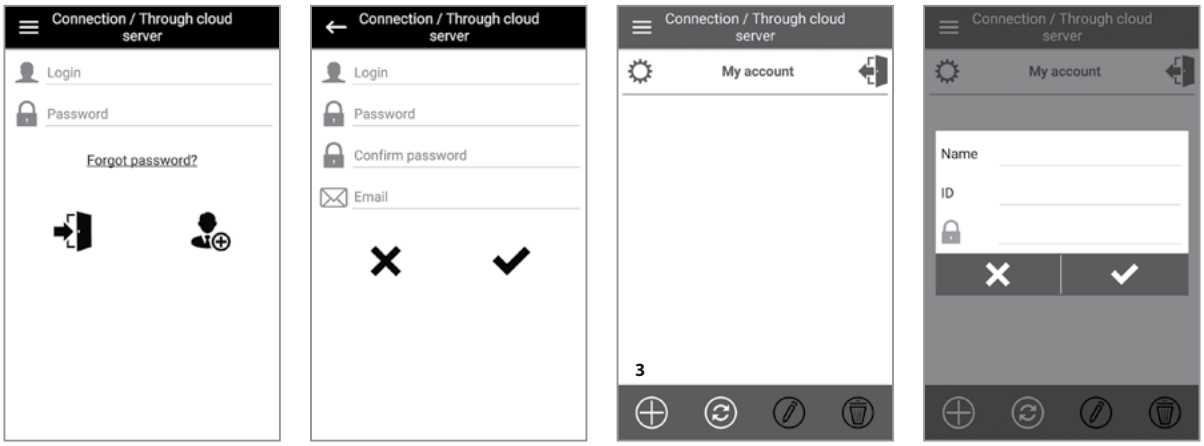

Menu structure

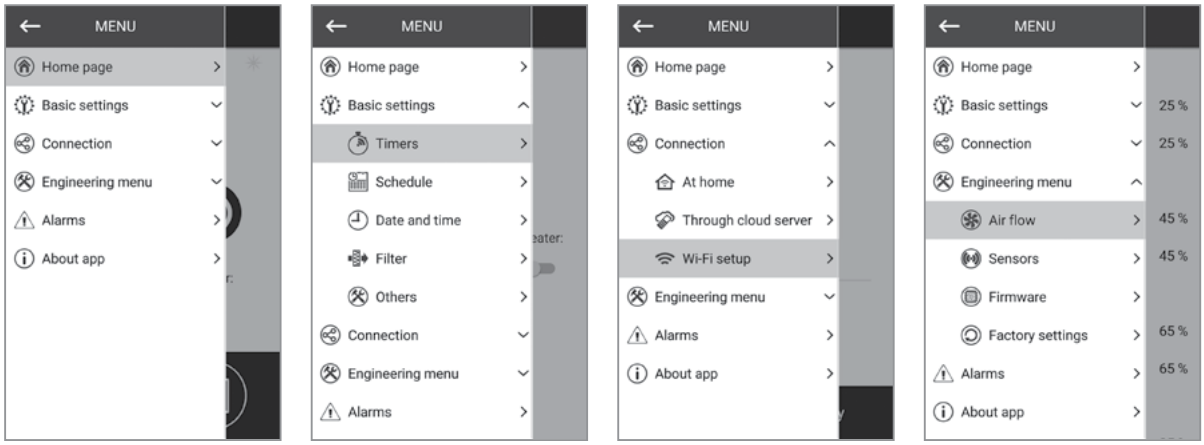

Home page

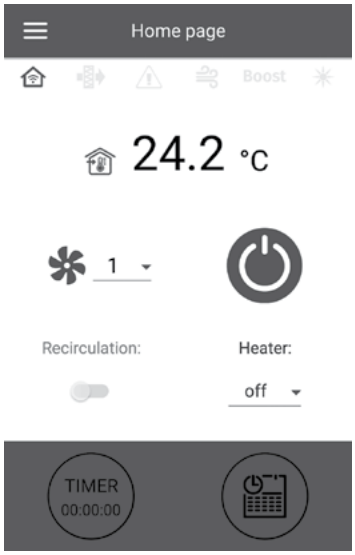

Indicators:

Current type of connection to the unit. Home connection or connection via a cloud server through Internet respectively.

Reheater activity.

Filter replacement indicator.

Red colour – alarm indication, orange colour – warning indication.

Electric heater cooling indicator (preheating or reheating) before switching off the unit.

Boost — Boost mode operation indicator.

Sensor readings:

Current temperature of the selected sensor, which controls the air temperature.

Control buttons:

— Unit on/Standby.

1 — Selection of pre-set speed.

TIMER 00:30:00 — Timer activation. Timer settings are made in **the Basic Settings** - **Timers menu**.

— Week-scheduled operation mode activation. The settings of this mode are made in **the Basic settings** - **Schedule menu**.

Recirculation — Activationof the recirculation mode. If there is no recirculation mode, the button is inactive.

Heater — Selecting the temperature setpoint for the reheater or turning it off.

Basic settings

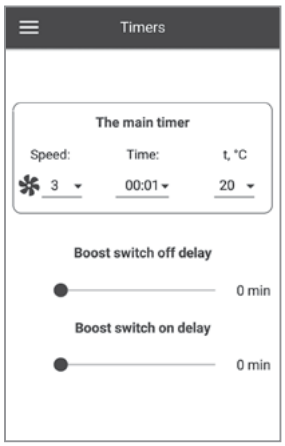

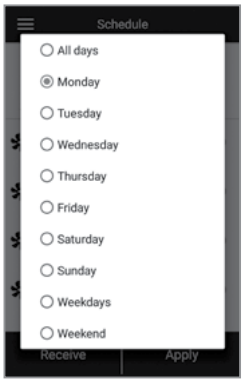

Timers

Main timer: Timer mode settings.
When the timer is activated in the Home page menu, the unit temporarily goes to the following settings:

1 — Selection of pre-set speed **1-5, Standby**.

00:30 — Timer setting

23 — Timer setting

Control temperature selection. Available +15 ° C.. + 30 ° C, off. If OFF is selected, temperature control will not be performed while the timer is running.

Boost turn-off delay: determines the turn-off delay time for the Boost mode after the signal at the digital input (Boost switch) disappears on the control board.

Boost turn-on delay: determines the turn-on delay time for the Boost mode after the signal is applied to the digital input (Boost switch).

Schedule

The weekly schedule can be set by means of 4 time intervals available for each day of the week.

Adjustment can be made for every day, weekdays, weekends or for the whole week.

When the Weekly Schedule mode is activated from the Main page, the unit will operate as scheduled according to the following parameters:

1 — Selection of pre-set speed **1-5, Standby**.

06:00 - 09:00 — Time setting for a specific segment.

23 — Control temperature selection. Available +15 ° C.. + 30 ° C, off.

If OFF is selected, temperature control will not be performed while the timer is running.

Date and time

Current time and date are displayed and adjusted in this menu.
Time display format: hh:mm:ss.
Date format: dd.mm.yyyy.

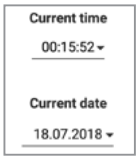

— To enter the time and date manually.

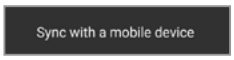

— The same time as in the mobile device will be automatically set.

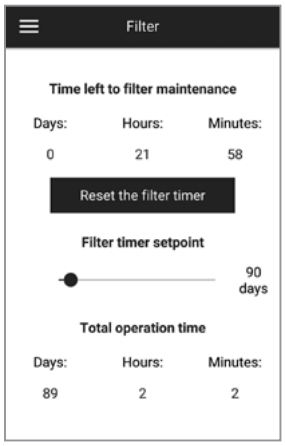

Filter

Filter timer setup: When the set time (70-365 days) has elapsed, the filter change indicator appears and filter replacement information is displayed in the Alarms menu.
Total operation time: Displays the running time of the unit, which cannot be reset.

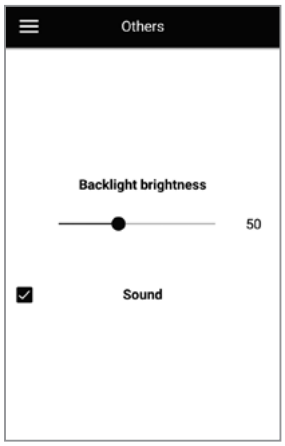

Other

The backlight brightness changes dynamically, after releasing the button, the brightness decreases to a preset level.
Sound: turns on/off the sound projector located on the boar.

Engineering menu

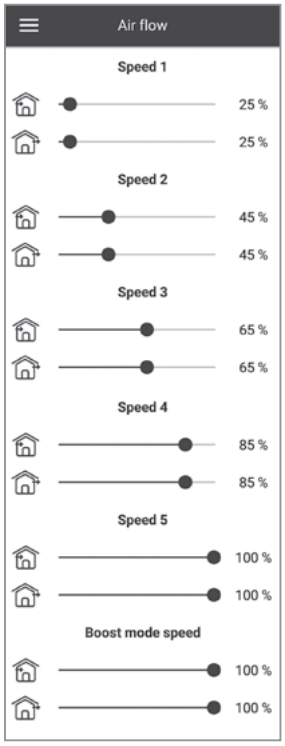

Air flow rate

Air flow rate, preset speed **1-5** and **Boost** mode are set in this section.

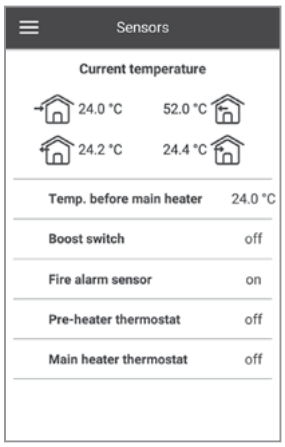

Sensors

This section displays the current status of all sensors:

— outdoor air temperature.

— supply air temperature.

— extract air temperature upstream of the heat exchanger.

— exhaust air temperature downstream of the heat exchanger.

Boost mode sensor
Fire alarm sensor
Preheater thermostat sensor
Reheater thermostat sensor

Firmware

This section displays the current version and date of the controller and control board firmware.

Factory settings

In this section you can reset your settings to the factory settings.
Communication with the unit may be lost after restoration.
If necessary, reset your Wi-Fi connection.

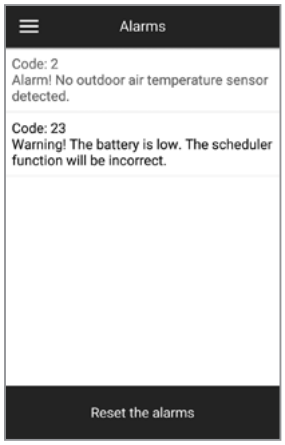

Alarms

This section displays alarms and warnings.
Alarms are highlighted in red, warnings are highlighted in black.
Alarm – indicates a serious error in operation.
The unit is forcibly turned off.
The alarm is reset manually using the **Reset the alarms** button.
Warning - the unit is not forcibly turned off.
Warnings are reset automatically after the cause is eliminated.

Alarm/Warning Codes

Ordering No.	Description
0	Alarm! Supply fan malfunction.
1	Alarm! Extract fan malfunction.
2	Alarm! No outdoor air temperature sensor detected.
3	Alarm! Shortening in the outdoor temperature sensor circuit.
4	Alarm! No supply air temperature sensor detected.
5	Alarm! Shortening in the supply air temperature sensor circuit.
6	Alarm! No extract air temperature sensor (upstream of the heat exchanger) detected.
7	Alarm! Shortening in the circuit of the extract air temperature sensor (upstream of the heat exchanger).
8	Alarm! No exhaust air temperature sensor detected.
9	Alarm! Shortening in the circuit of the exhaust air temperature sensor (downstream of the heat exchanger).
10	Alarm! Actuation of the protecting pre-heater thermostat.
11	Alarm! Actuation of the main heater thermostat.
23	Warning! The battery is low. The scheduler function will be incorrect.
25	Alarm! Fire alarm activation.
40	Warning! The filter replacement timer has expired. The filter must be replaced.
50	Alarm! No connection between the control panel and the controller.
51	Alarm! No additional supply air temperature sensor detected before main heater.

TECHNICAL MAINTENANCE

DISCONNECT THE UNIT FROM POWER SUPPLY BEFORE ANY MAINTENANCE OPERATIONS!

Maintenance operations of the unit are required 3-4 times per year. Maintenance includes periodic dust removal from surfaces, cleaning and replacement of filters and dry cleaning of fans.
Maintenance includes general cleaning of the unit and the following operations:

1. Filter maintenance (3-4 times per year).
Dirty filters increase air resistance in the system and reduce supply air volume.
Remove the clogged filters from the unit.
Clean the F8 filter with a vacuum cleaner.
To remove the G4 filters for cleaning remove the flexible clamps fixing them and pull the filters until they slide off the guides. Clean the filters with water and let them dry. After complete drying reassemble the filters in the reverse order.
Install the filters back to the unit.
The filters require cleaning not less than 3-4 times per year.
For new filters contact the Seller.

2. Heat exchanger maintenance (once a year).
Some dust may accumulate on the heat exchanger block even in case of regular maintenance of the filters.
To maintain the high heat recovery efficiency, regular cleaning is required.
Periodical dry cleaning is recommended. Use a vacuum cleaner with a narrow nozzle.
Remove the clogged heat exchanger out of the unit, clean it with a vacuum cleaner and install the heat exchanger back to the unit.

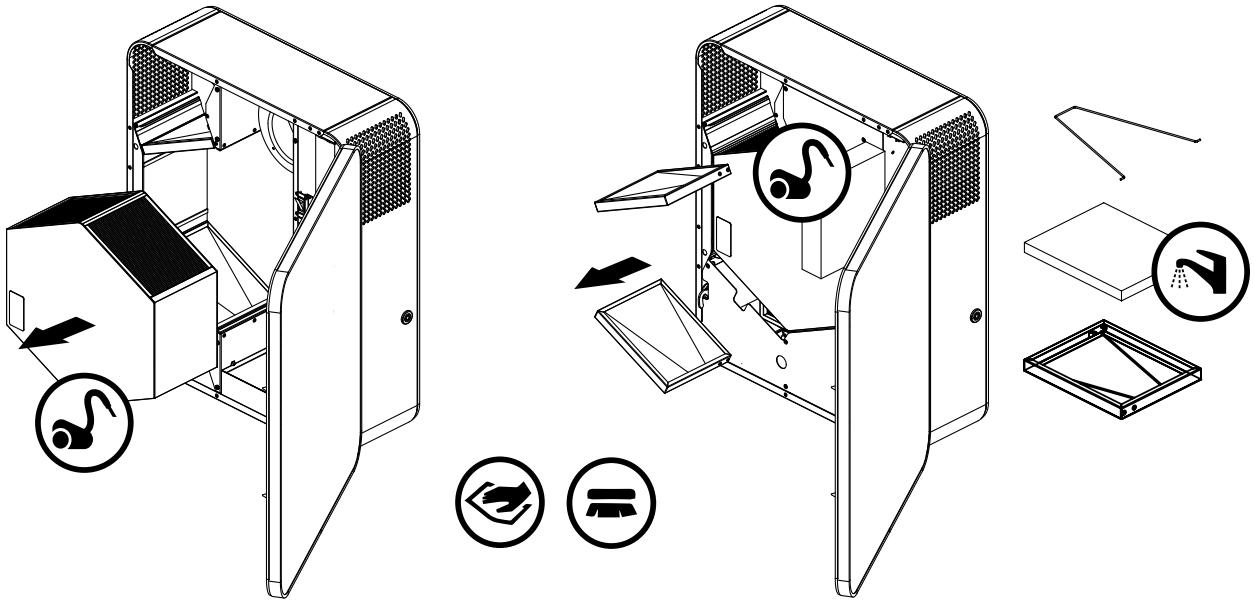

3. Fan maintenance (once a year).
Even in case of regular maintenance of the filters, some dust may accumulate inside the fans and reduce the fan performance and supply air flow.
Clean the fan with a cloth or a soft brush.
Do not use water, aggressive solvents, or sharp objects as they may damage the impeller.
4. Technical maintenance of the supply grille (twice a year).
The supply grille may get clogged with leaves and other objects which may reduce the unit performance.
Check the supply grille twice per year and clean it as required.
5. Technical maintenance of air duct system (every 5 years).
Even regular fulfilling of all the prescribed above maintenance operations may not completely prevent dirt accumulation in the air ducts which reduces the unit capacity.
Duct maintenance means regular cleaning or replacement.

TROUBLESHOOTING

PROBLEM	POSSIBLE REASONS	TROUBLESHOOTING
The fan(s) do(es) not get started.	No power supply.	Make sure that the unit is properly connected to the power mains and make any corrections, if necessary.
Cold supply air.	Extract filter clogging.	Clean or replace the extract filter.
	Heat exchanger icing.	Check the heat exchanger for icing. Stop the unit operation if necessary and wait until the ice melts.
	Heater malfunction.	Contact the Seller.
Low air flow.	The filters, fans or the heat exchanger are soiled.	Clean or replace the filters, clean the fans and the heat exchanger.
	The ventilation system is soiled or damaged.	Check for unobstructed opening of diffusers and louver shutters, check the exhaust hood and the supply grille and clean those, if necessary. Make sure the air ducts are clean and intact.
Noise, vibration.	The fan impellers are soiled.	Clean the impellers.
	The screw connection is loose.	Tighten the fastening screws.
Water leakage.	The drain pipe is clogged.	Contact the Seller.

STORAGE AND TRANSPORTATION REGULATIONS

- Store the unit in the manufacturer's original packaging box in a dry closed ventilated premise with temperature range from +5 ˚C to +40 ˚C and relative humidity up to 70 %.
- Storage environment must not contain aggressive vapors and chemical mixtures provoking corrosion, insulation, and sealing deformation.
- Use suitable hoist machinery for handling and storage operations to prevent possible damage to the unit.
- Follow the handling requirements applicable for the particular type of cargo.
- The unit can be carried in the original packaging by any mode of transport provided proper protection against precipitation and mechanical damage. The unit must be transported only in the working position.
- Avoid sharp blows, scratches, or rough handling during loading and unloading.
- Prior to the initial power-up after transportation at low temperatures, allow the unit to warm up at operating temperature for at least 3-4 hours.

MANUFACTURER'S WARRANTY

The product is in compliance with EU norms and standards on low voltage guidelines and electromagnetic compatibility. We hereby declare that the product complies with the provisions of Electromagnetic Council Directive 2014/30/EU, Low Voltage Directive 2014/35/EU and CE-marking Directive 93/68/EEC. This certificate is issued following test carried out on samples of the product referred to above. The manufacturer hereby warrants normal operation of the unit for 24 months after the retail sale date provided the user's observance of the transportation, storage, installation, and operation regulations. Should any malfunctions occur in the course of the unit operation through the Manufacturer's fault during the guaranteed period of operation, the user is entitled to get all the faults eliminated by the manufacturer by means of warranty repair at the factory free of charge. The warranty repair includes work specific to elimination of faults in the unit operation to ensure its intended use by the user within the guaranteed period of operation. The faults are eliminated by means of replacement or repair of the unit components or a specific part of such unit component.

The warranty repair does not include:

- routine technical maintenance
- unit installation/dismantling
- unit setup

To benefit from warranty repair, the user must provide the unit, the user's manual with the purchase date stamp, and the payment paperwork certifying the purchase. The unit model must comply with the one stated in the user's manual. Contact the Seller for warranty service.

The manufacturer's warranty does not apply to the following cases:

- User's failure to submit the unit with the entire delivery package as stated in the user's manual including submission with missing component parts previously dismounted by the user.
- Mismatch of the unit model and the brand name with the information stated on the unit packaging and in the user's manual.
- User's failure to ensure timely technical maintenance of the unit.
- External damage to the unit casing (excluding external modifications as required for installation) and internal components caused by the user.
- Redesign or engineering changes to the unit.
- Replacement and use of any assemblies, parts and components not approved by the manufacturer.
- Unit misuse.
- Violation of the unit installation regulations by the user.
- Violation of the unit control regulations by the user.
- Unit connection to power mains with a voltage different from the one stated in the user's manual.
- Unit breakdown due to voltage surges in power mains.
- Discretionary repair of the unit by the user.
- Unit repair by any persons without the manufacturer's authorization.
- Expiration of the unit warranty period.
- Violation of the unit transportation regulations by the user.
- Violation of the unit storage regulations by the user.
- Wrongful actions against the unit committed by third parties.
- Unit breakdown due to circumstances of insuperable force (fire, flood, earthquake, war, hostilities of any kind, blockades).
- Missing seals if provided by the user's manual.
- Failure to submit the user's manual with the unit purchase date stamp.
- Missing payment paperwork certifying the unit purchase.

FOLLOWING THE REGULATIONS STIPULATED HEREIN WILL ENSURE A LONG AND TROUBLE-FREE OPERATION OF THE UNIT.

USER'S WARRANTY CLAIMS SHALL BE SUBJECT TO REVIEW ONLY UPON PRESENTATION OF THE UNIT, THE PAYMENT DOCUMENT AND THE USER'S MANUAL WITH THE PURCHASE DATE STAMP.

CERTIFICATE OF ACCEPTANCE

Unit Type	Heat recovery air handling unit
Model	Freshbox_____100_____WiFi
Serial Number	
Manufacture Date	
Quality Inspector's Stamp	

SELLER INFORMATION

Seller	
Address	
Phone Number	
E-mail	
Purchase Date	
This is to certify acceptance of the complete unit delivery with the user's manual. The warranty terms are acknowledged and accepted.	
Customer's Signature	

Seller's Stamp

INSTALLATION CERTIFICATE

The Freshbox_____100_____WiFi unit is installed pursuant to the requirements stated in the present user's manual.		
Seller		
Address		
Phone Number		
Installation Technician's Full Name		
Installation Date:	**Signature:**	
The unit has been installed in accordance with the provisions of all the applicable local and national construction, electrical and technical codes and standards. The unit operates normally as intended by the manufacturer.		
Signature:		

Installation Stamp

WARRANTY CARD

Unit Type	Heat recovery air handling unit
Model	Freshbox_____100_____WiFi
Serial Number	
Manufacture Date	
Purchase Date	
Warranty Period	
Seller	

Seller's Stamp

BLAUBERG
Ventilatoren

www.blaubergventilatoren.de
B73-9EN-04