# VENTO EXPERT A100-1 S10 W V.2

HEAT RECOVERY SINGLE-ROOM UNITS

## Features

- Arrangement of efficient energy-saving, supply and exhaust, single-room ventilation in flats, houses, cottages, social and commercial premises.
- Reducing heat losses caused by ventilation due to heat recovery.
- Humidity balance and controllable air exchange create individually controlled microclimate.
- Wi-Fi data exchange between several single-room ventilation units for coordinated operation.
- Controlled by Android or iOS smartphone or tablet.
- Connection to smart house or Building Management System (BMS).

**Air flow:** up to 108 m³/h
30 l/s

**Heat recovery efficiency:** up to 87 %

**Power:** from 3.2 W
**SFP:** from 0.82 W/l/s

**Noise level:** from 13 dBA

EC motor · ErP 2016 · ErP 2018 · Wi Fi READY

## Design

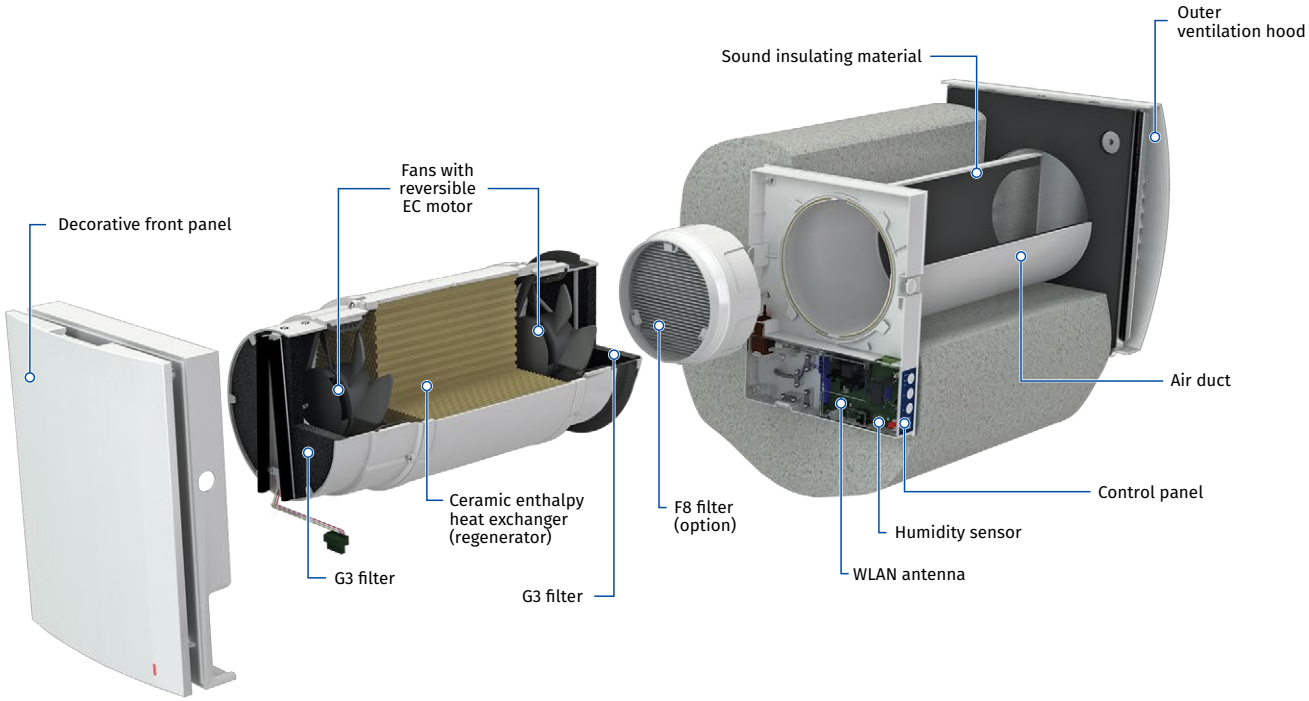

One of the best heat recovery efficiency on the market due to innovative hexagonal structure of the heat exchanger cells

Wi Fi READY

Built-in Wi-Fi for wireless communication between units and Android or iOS device control

Integrated automatic air shutters prevent air back drafting

Easy maintenance.
Indoor unit is opened by pressing the latches on both sides.
The specially designed front panel can be closed manually to ensure 100 % air tightness and protect against wind impact

## Designation key

| Model | Air duct | Rated air flow [m³/h] | Unit modification | Ventilation hood type | Control |
|---|---|---|---|---|---|
| Vento Expert | **A:** round air duct | **100** | **-1** | **S10:** plastic outer ventilation hood AH-10 white 160 (for standard walls)<br>**S:** metal hood (for thin walls) | **W V.2:** control and setup of the unit with the Wi-Fi mobile application |

# VENTO EXPERT A100-1 S10 W V.2

HEAT RECOVERY SINGLE-ROOM UNITS

## Control

- Unit control via smartphone or tablet application.
- The units can be connected via Wi-Fi for synchronized operation.
- House ventilation control via cloud service from anywhere in the world.
- Connection to smart house or Building Management System (BMS) via Wi-Fi.

**Blauberg Vento V.2** app for Android or iOS devices is available at Google Play and App Store.

GET IT ON Google Play

Download on the App Store

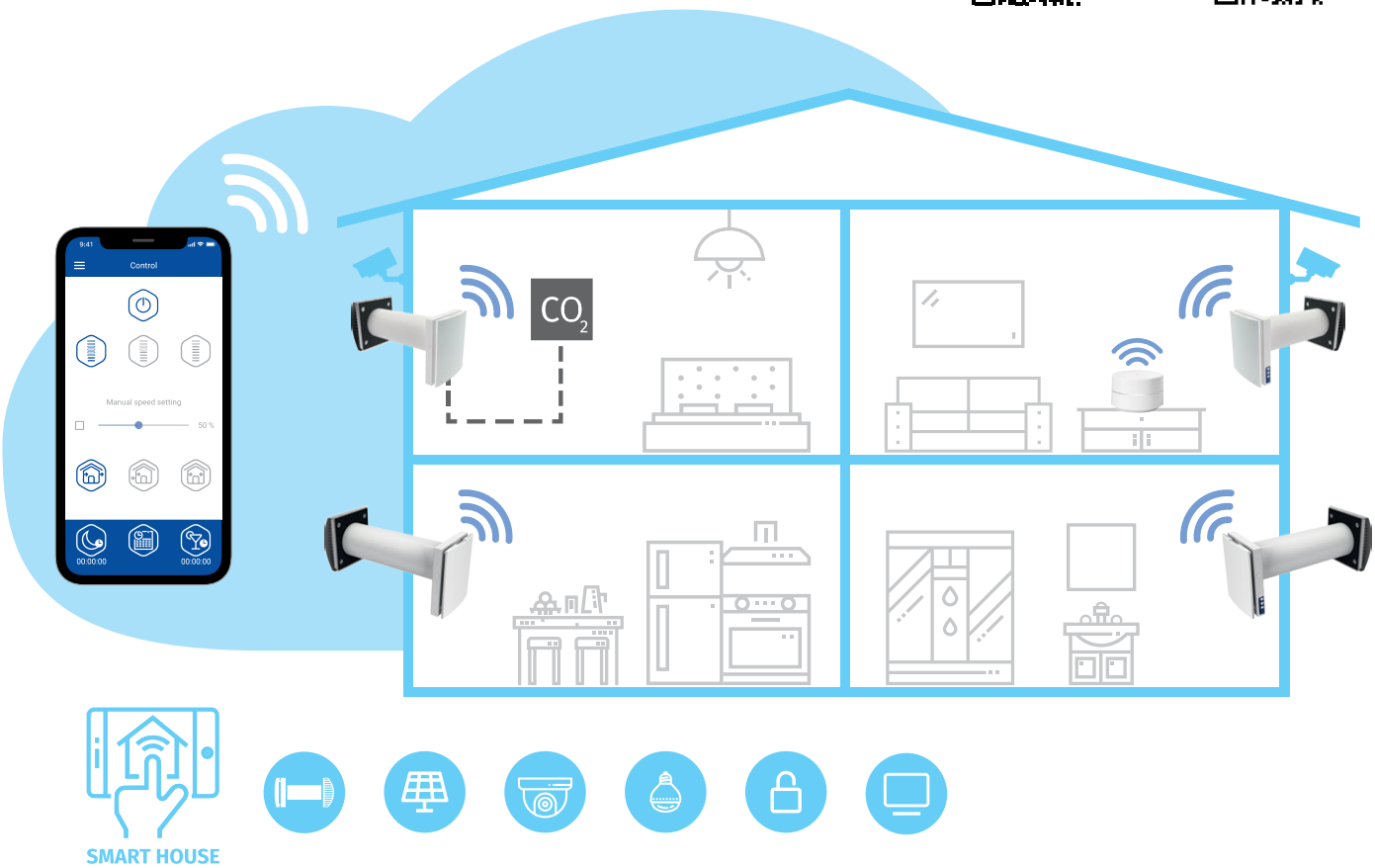


- **Vento Expert A100-1 S10 W V.2** either can operate as independent unit or can be connected with other units in a house and controlled with a master unit. In this case, only the master unit receives a signal from the remote control.

Vento Expert A100-1 S10 W V.2

- Control of the unit operation mode is also performed by means of the sensor control panel located on the unit casing or the remote control.

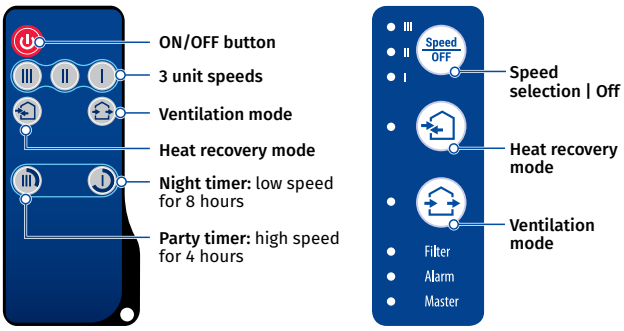


- **Vento Expert A100-1 S10 W V.2** is equipped with a humidity sensor for indoor humidity control. If humidity increases above a set point, the unit boosts to the speed III.

# VENTO EXPERT A100-1 S10 W V.2

HEAT RECOVERY SINGLE-ROOM UNITS

## Energy recovery

### UNIT OPERATING LOGIC IN WINTER PERIOD

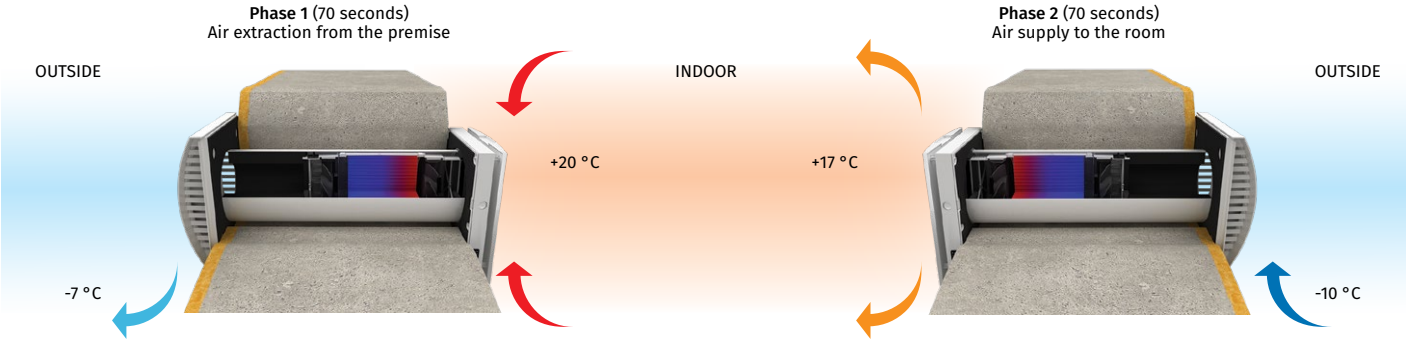


- Warm stale air is extracted from the premise, flows through the ceramic heat exchanger and transfers its heat and moisture to it.
- As the ceramic heat exchanger gets warmed up, the unit switches to the supply mode.
- Clean cold intake air flows through the heat exchanger and absorbs accumulated heat and humidity.
- When the heat exchanger is cooled down, the unit switches to the extract air mode.

## Mounting

- The unit is designed for through-the-wall installation inside a prepared hole in an outer wall of the building.
- The best ventilation solution is pairwise installation of reverse phase synchronized units. Some units ensure supply of fresh air to the room and the other units extract air from the premise. This way the most efficient balanced ventilation is arranged.
- The Vento **Expert A100-1 W V.2** unit can also be installed in a bathroom and kitchen, if allowed by local building codes. Otherwise, the **Vento Expert Duo** unit or an extract fan should be installed.

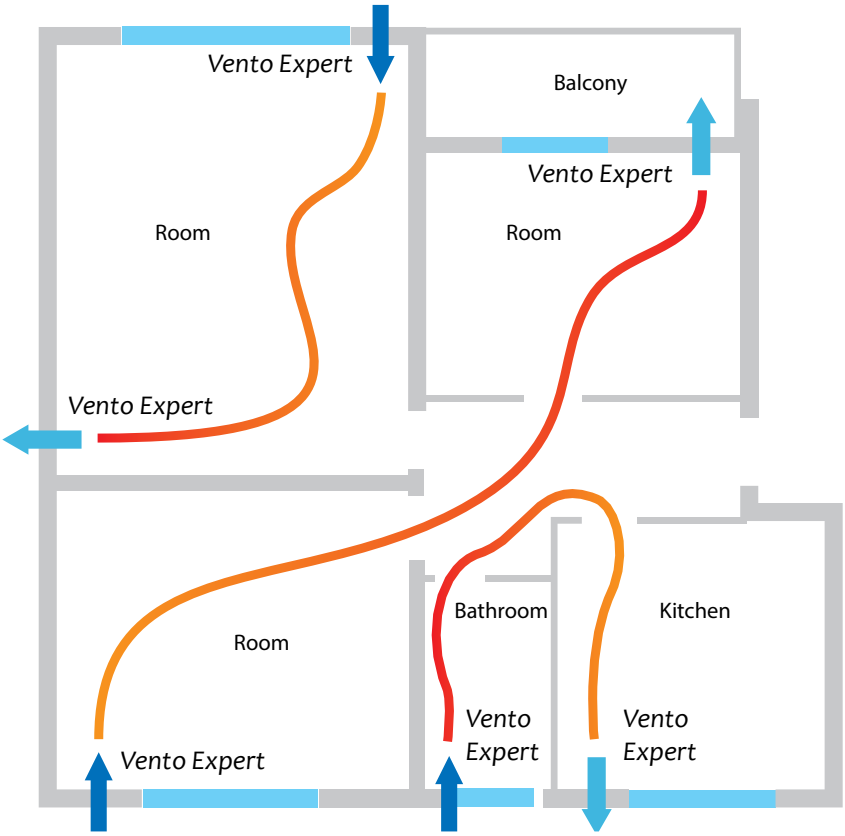


Angular mounting into a wallwith standard thickness using
**KIT BlauPlast white 160 / KIT BlauPlast chrome 160**

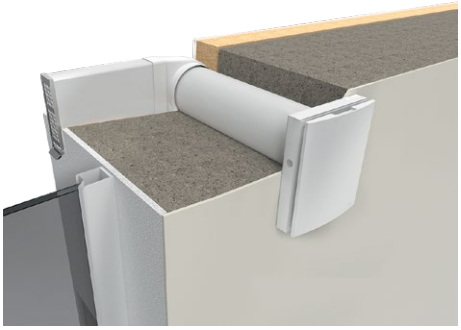

Unit installation example with the hoods for thin walls
**AH-S grey 160 / AH-S chrome 160**

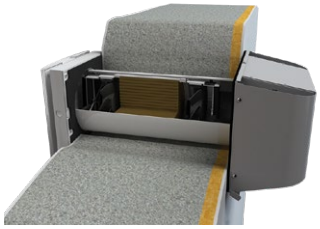

# VENTO EXPERT A100-1 S10 W V.2

HEAT RECOVERY SINGLE-ROOM UNITS

## Technical data

| Parameters | Vento Expert A100-1 S10 W V.2<br>Vento Expert A100-1 S W V.2 | | | |
|---|---|---|---|---|
| Speed | I | II | III | MAX |
| Voltage [V / 50 (60) Hz] | 100–240 | | | |
| Power [W] | 3.20 | 4.00 | 6.60 | 18.00 |
| Current [A] | 0.037 | 0.046 | 0.071 | 0.151 |
| RPM [min⁻¹] | 780 | 1100 | 1920 | 2940 |
| Air flow in ventilation mode [m³/h (l/s)] | 18(5) | 30 (8) | 58 (16) | 108 (30) |
| Air flow in energy recovery mode [m³/h (l/s)] | 9 (3) | 15 (4) | 29 (8) | 54 (15) |
| SFP [W/l/s] | 1.28 | 0.96 | 0.82 | 1.20 |
| Filter | G3 (Option: F8 PM2.5 > 99 %*) | | | |
| Transported air temperature [°C] | -20...+40 | | | |
| Sound pressure level at 1 m in accordance with ISO 3741:2004 [dBA] | 23 | 27 | 40 | 51 |
| Sound pressure level at 3 m in accordance with ISO 3741:2004 [dBA] | 13 | 18 | 30 | 42 |
| Outdoor sound pressure attenuation in accordance with DIN EN 20140 [dBA] | 42 | | | |
| Indoor/outdoor airtightness classification of the complete unit in accordance with EN 13141-8 | D1 | | | |
| Heat recovery efficiency in accordance with DIBt LÜ-A 20 [%] | up to 87 | | | |
| Ingress Protection Rating | IP24 | | | |

* maximum air flow 82 m³/h

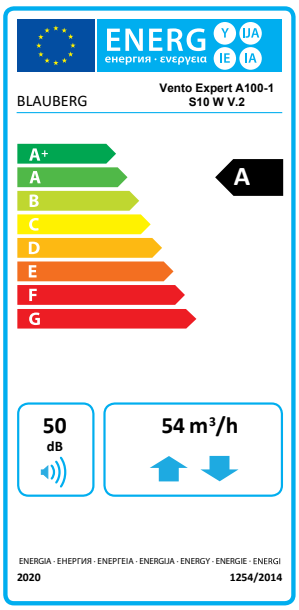


## Overall dimensions [mm]

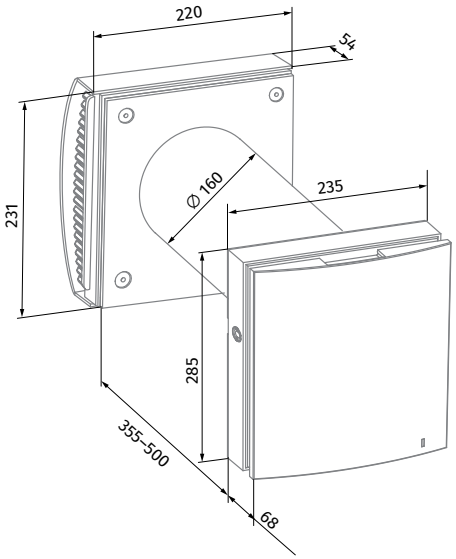


Vento Expert A100-1 S10 W V.2

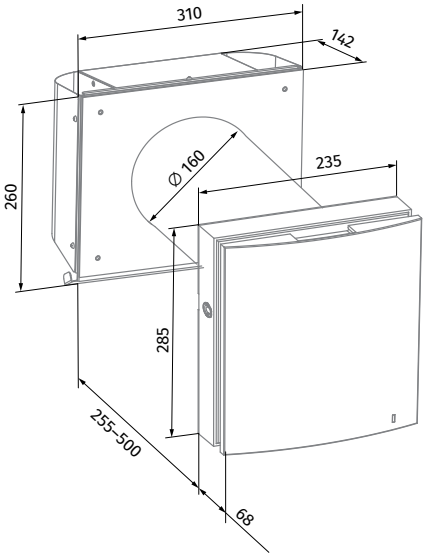


Vento Expert A100-1 S W V.2
(for thin walls)

# VENTO EXPERT A100-1 S10 W V.2

HEAT RECOVERY SINGLE-ROOM UNITS

## Accessories

| Name | | Description |
|---|---|---|
| FP2 Vento G3 | | G3 filters (2 pcs.) |
| FP2 Vento F8 | | Filter set. Includes:<br>• Plastic frame (1 pc.)<br>• G2 pre-filter (1 pc.)<br>• F8 filter (1 pc.). Filtration rate PM2.5 > 99 % |
| AH-10 *colour* 160 | | Plastic outer ventilation hood. Available in colours: white, black, grey, terracotta, brown, vintage |
| AH-10 chrome 160 | | Plastic outer ventilation hood with a plate with brushed stainless steel effect finish |
| AH-11 *colour* 160 | | Plastic outer ventilation hood. Available in colours: white, black, grey, terracotta, brown, vintage |
| AH-S grey 160 | | Stainless steel ventilation hood, painted grey |
| AH-S chrome 160 | | Brushed stainless steel ventilation hood |
| PP 160/0.5 | | Outer ventilation hood for mounting from inside |
| KIT BlauPlast white 160 | | Kit for angular mounting with white colour grille (for walls with standard thickness) |
| KIT BlauPlast chrome 160 | | Kit for angular mounting with stainless steel outer grille (for walls with standard thickness) |
| R 160-500 | | 500 mm air duct and polystyrene foam plug |
| R 160-700 | | 700 mm air duct and polystyrene foam plug |
| SE Vento Expert W | | Sensor control panel |

# VENTO EXPERT A100-1 S10 W V.2



| Name | | Description |
|---|---|---|
| **FB Vento Expert A50** | | Remote control |
| **CD-1** | | $CO_2$ sensor with LED $CO_2$ indication and a sensor button for operation mode selection |
| **CD-2** | | $CO_2$ sensor |
| **S Vento Expert A50** | | Cardboard template for indoor installation of the unit |