BLAUBOX DW PRO

Supply suspended ventilation units

Features

- Ventilation units for efficient supply ventilation in various premises.
- Controllable air supply, heating and filtration.
- Compatible with 400x200 up to 700x400 mm rectangular air ducts.

Air flow:
up to 4100 m³/h
1139 l/s

ErP 2016 ErP 2018

Design

- The casing is made of double-skinned aluzinc panels, internally filled with 50 mm mineral wool layer for heat and sound insulation.
- The casing has fixing brackets with vibration absorbing connectors for easy installation.
- The hinged casing panel ensures easy access to the internals for cleaning, filter replacement and other maintenance operations.

Fans

- Asynchronous external rotor motor and centrifugal high-pressure impeller with backward curved blades is used for air supply.
- Integrated motor overheating protection with automatic restart.
- Dynamically balanced impeller.
- Equipped with ball bearings for longer service life.
- Reliable and quiet operation.

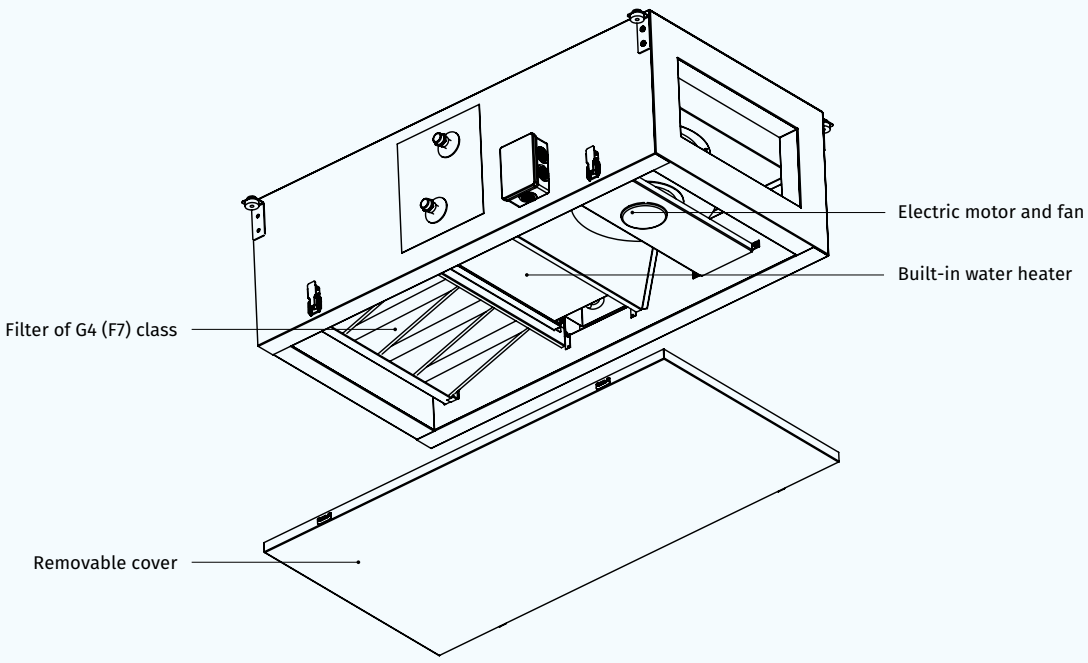

Air heater

- The units are equipped with a water (glycol) heater for operation during cold seasons at low outside temperature.
- The air temperature sensor downstream of the water heater and the return heat medium sensor ensure freezing protection of the water heater. If any of these sensors detects a temperature point below the set minimum value, the signal is sent automatically to the control unit to troubleshoot cooling.

Air filtration

- The built-in G4 supply filter provides air filtration.
- Optionally a F7 filter may be installed for efficient filtration.

Control and automation

- The units incorporate an integrated control system with a wall-mounted control panel and LCD display.
- The standard delivery set includes a 10 m cable for connection of the unit and the control panel.
- **Control panel functions:**
  - Activating/deactivating the unit.
  - Setting low, medium and high speeds for the supply fan. Air flow control.
  - Setting and maintaining of indoor air temperature.
  - Display of the indoor air temperature.
  - Supply filter clogging control according to the pressostat.
  - Alarm indication.
- **Automation functions:**
  - Control of the supply air damper actuator (separate order).
  - Smooth rotation speed control of the fan (3 ~ 400 V, 50 Hz).
  - Water heater control.
  - Generation of the activation signal for the exhaust fan if available in the system.
  - Shutdown of the unit on signal from the fire alarm panel.
  - Control of the cooler with respect to the set indoor air temperature (separate order).
- All the operation parameters are individually adjustable.

Mounting

- The unit is suitable for mounting on the floor, ceiling mounting or wall mounting with fixing brackets in any mounting position except for the vertical one with air flow downwards.
- The correct mounted unit must provide free access to the hinged panel for servicing and filter replacement.

Designation key

Series	Casing modification	Heater type	Rated air flow [m³/h]		Number of water coil rows	Control
BLAUBOX	**D:** Suspended mounting	**W:** water heater	**1200; 2300; 3200; 4100**	–	**3; 4**	**Pro:** with control panel

Overall dimensions [mm]

Model	B	B1	B2	B3	H	H1	H2	L	L1
BLAUBOX DW 1200-4 Pro	400	420	624	582	200	220	374	1145	1106
BLAUBOX DW 2300-4 Pro	500	520	689	646	300	320	447	1250	1212
BLAUBOX DW 3200-4 Pro	600	620	787	744	350	370	500	1252	1212
BLAUBOX DW 4100-3 Pro	700	720	888	844	400	420	546	1302	1262

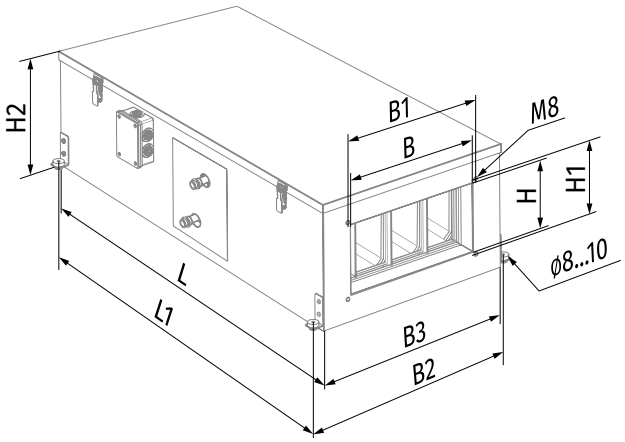

Technical data

Parameters	BLAUBOX DW 1200-4 Pro	BLAUBOX DW 2300-4 Pro	BLAUBOX DW 3200-4 Pro	BLAUBOX DW 4100-3 Pro
Voltage [V / 50 Hz]	3 ~ 400	3 ~ 400	3 ~ 400	3 ~ 400
Number of water (glycol) coil rows	4	4	4	3
Power [kW]	0.32	0.62	1.33	2.3
Current [A]	0.55	1.05	2.4	4.3
Maximum air flow [m³/h (l/s)]	1200 (333)	2350 (653)	3260 (906)	4100 (1139)
RPM [min⁻¹]	2700	2690	2730	2840
Sound pressure level at 3 m [dBA]	51	54	57	75
Transported air temperature [°C]	-25...+40	-25...+40	-25...+40	-25...+70
Casing material	aluzinc	aluzinc	aluzinc	aluzinc
Insulation	50 mm mineral wool	50 mm mineral wool	50 mm mineral wool	50 mm mineral wool
Supply filter	G4 (option: F7)	G4 (option: F7)	G4 (option: F7)	G4 (option: F7)
Connected air duct diameter [mm]	400x200	500x300	600x350	700x400
Weight [kg]	57	63	94	110
ErP	2016, 2018	2016, 2018	2016, 2018	2016, 2018

BLAUBOX DW 1200-4 Pro

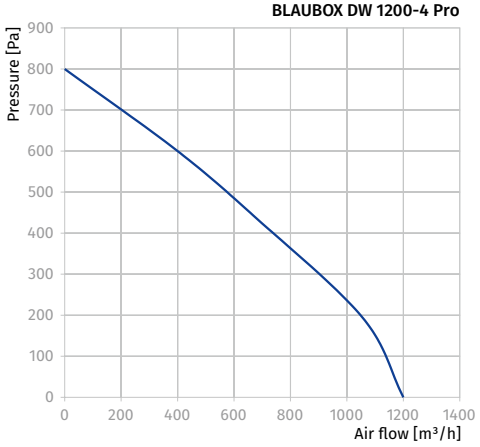

BLAUBOX DW 2300-4 Pro

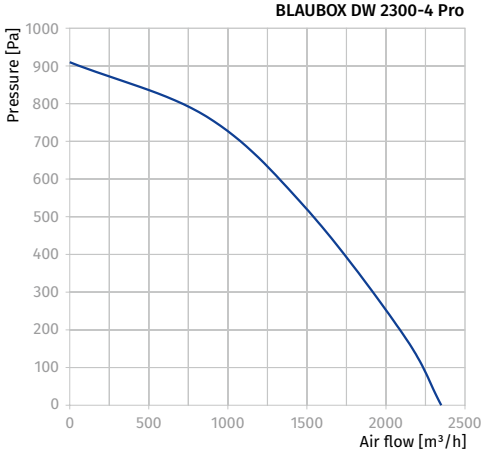

BLAUBOX DW 3200-4 Pro

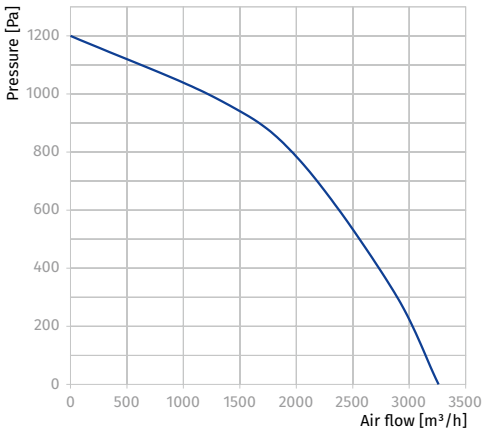

BLAUBOX DW 4100-3 Pro

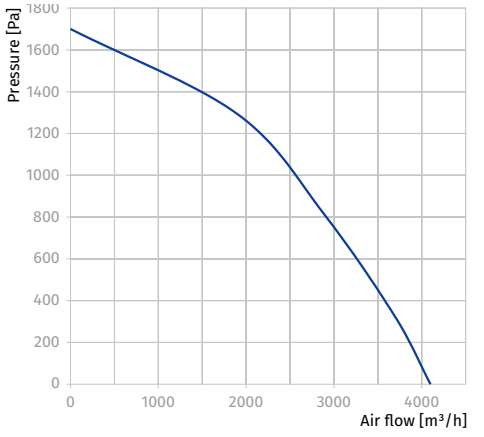

BLAUBOX DW 1200-4 PRO

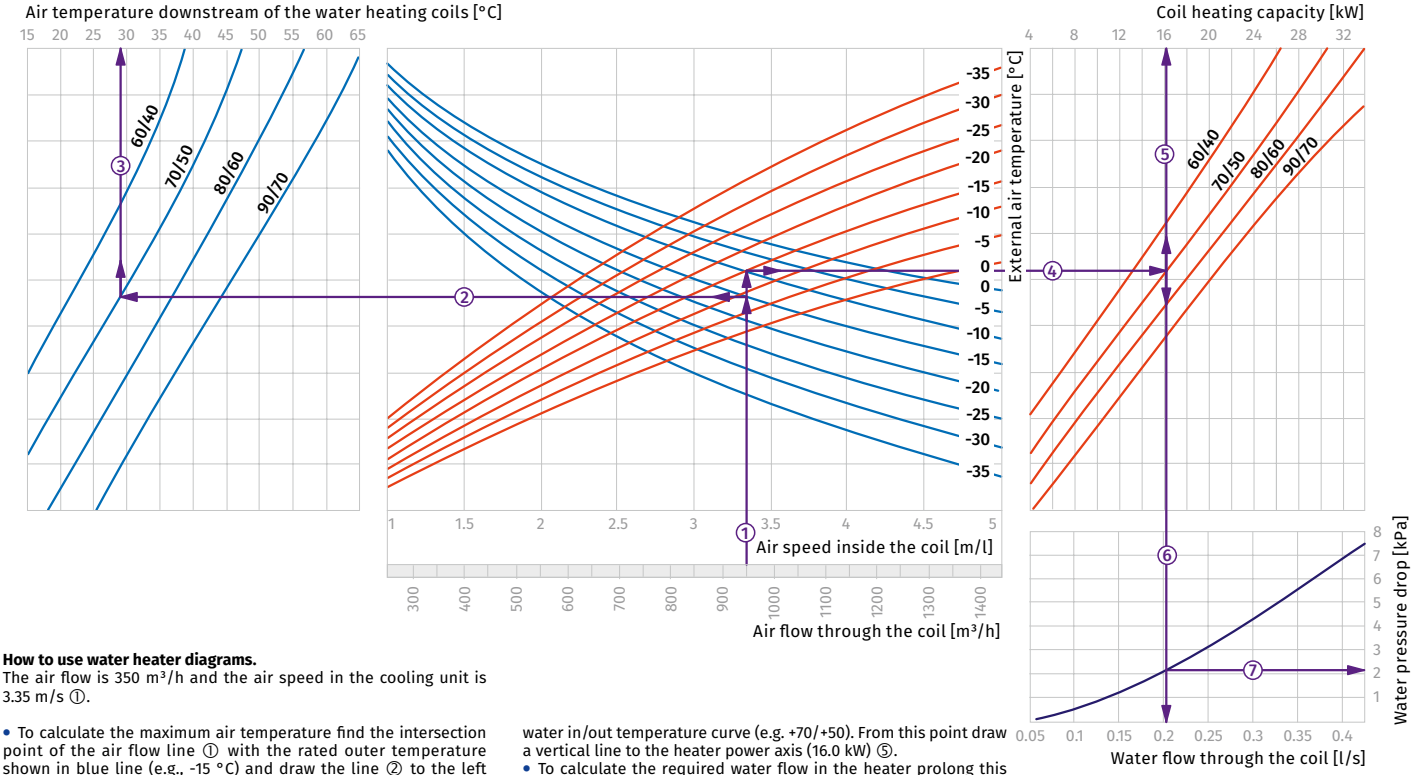

How to use water heater diagrams.
The air flow is 350 m³/h and the air speed in the cooling unit is 3.35 m/s ①.

- To calculate the maximum air temperature find the intersection point of the air flow line ① with the rated outer temperature shown in blue line (e.g., -15 °C) and draw the line ② to the left until it crosses the water in/out temperature curve (e.g. +70/+50). From this point draw a vertical line to the supply air temperature downstream of the heater (+29 °C) ③.
- To calculate the heater power find the intersection point of the air flow ① with the rated winter temperature shown in red line (e.g., -15 °C) and draw the line ④ to the right until it crosses the water in/out temperature curve (e.g. +70/+50). From this point draw a vertical line to the heater power axis (16.0 kW) ⑤.
- To calculate the required water flow in the heater prolong this line ⑥ downwards to the water flow axis (0.2 l/s).
- To calculate the water pressure drop in the heater find the intersection point of the line ⑥ with the pressure loss curve and prolong the line ⑦ to the right on the water pressure drop axis (2.1 kPa).

BLAUBOX DW 2300-4 PRO

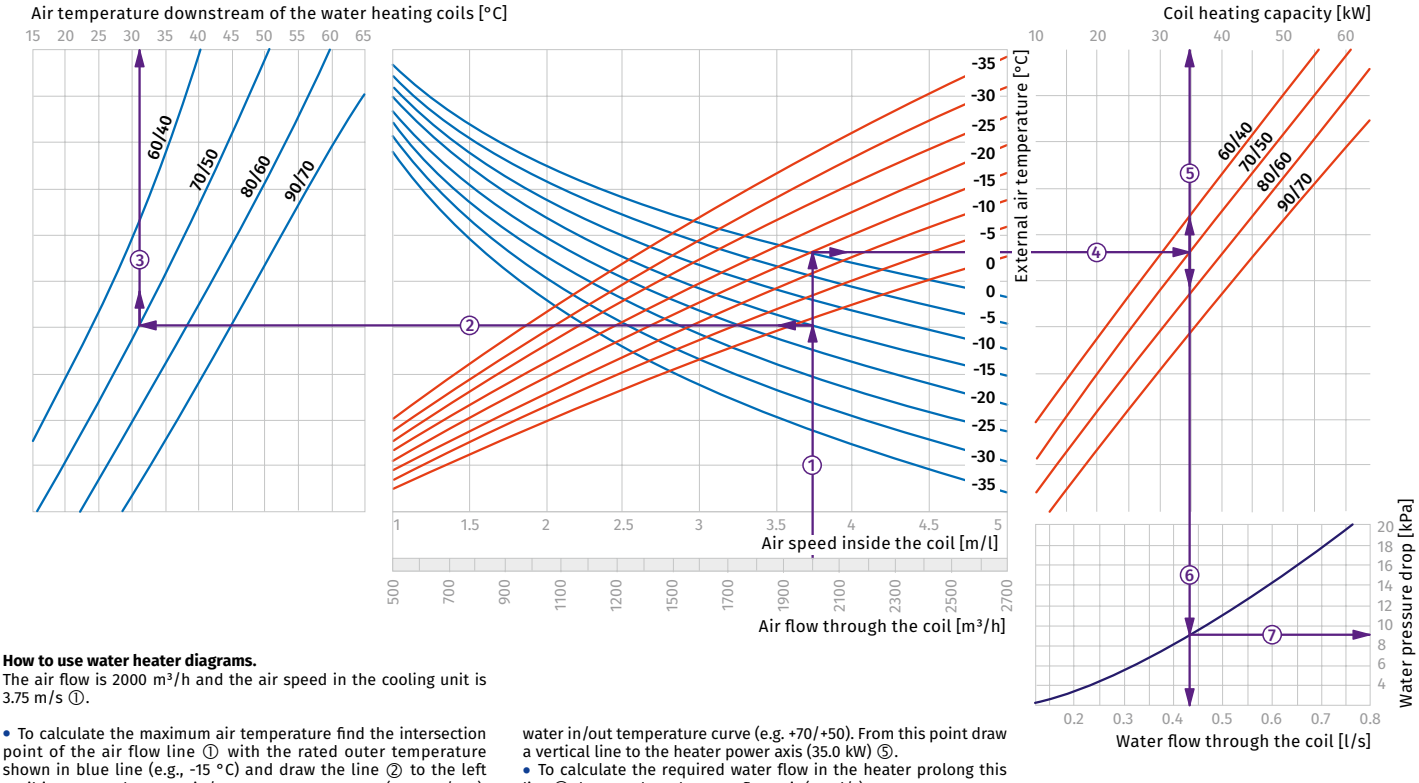

How to use water heater diagrams.
The air flow is 2000 m³/h and the air speed in the cooling unit is 3.75 m/s ①.

- To calculate the maximum air temperature find the intersection point of the air flow line ① with the rated outer temperature shown in blue line (e.g., -15 °C) and draw the line ② to the left until it crosses the water in/out temperature curve (e.g. +70/+50). From this point draw a vertical line to the supply air temperature downstream of the heater (+31 °C) ③.
- To calculate the heater power find the intersection point of the air flow ① with the rated winter temperature shown in red line (e.g., -15 °C) and draw the line ④ to the right until it crosses the water in/out temperature curve (e.g. +70/+50). From this point draw a vertical line to the heater power axis (35.0 kW) ⑤.
- To calculate the required water flow in the heater prolong this line ⑥ downwards to the water flow axis (0.43 l/s).
- To calculate the water pressure drop in the heater find the intersection point of the line ⑥ with the pressure loss curve and prolong the line ⑦ to the right on the water pressure drop axis (9.0 kPa).

BLAUBOX DW 3200-4 PRO

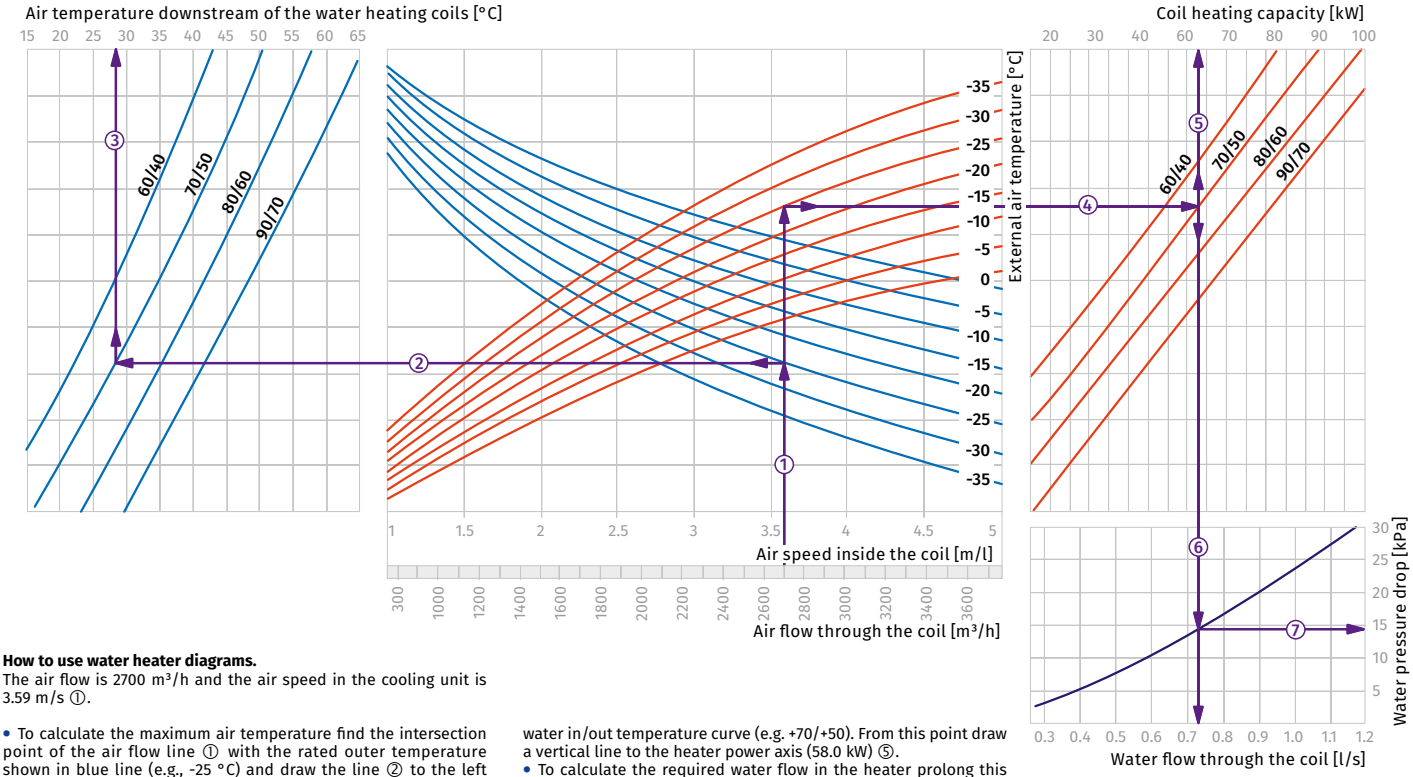

How to use water heater diagrams.
The air flow is 2700 m³/h and the air speed in the cooling unit is 3.59 m/s ①.

- To calculate the maximum air temperature find the intersection point of the air flow line ① with the rated outer temperature shown in blue line (e.g., -25 °C) and draw the line ② to the left until it crosses the water in/out temperature curve (e.g. +70/+50). From this point draw a vertical line to the supply air temperature downstream of the heater (+28 °C) ③.
- To calculate the heater power find the intersection point of the air flow ① with the rated winter temperature shown in red line (e.g., -25 °C) and draw the line ④ to the right until it crosses the water in/out temperature curve (e.g. +70/+50). From this point draw a vertical line to the heater power axis (58.0 kW) ⑤.
- To calculate the required water flow in the heater prolong this line ⑥ downwards to the water flow axis (0.73 l/s).
- To calculate the water pressure drop in the heater find the intersection point of the line ⑥ with the pressure loss curve and prolong the line ⑦ to the right on the water pressure drop axis (14.0 kPa).

BLAUBOX DW 4100-3 PRO

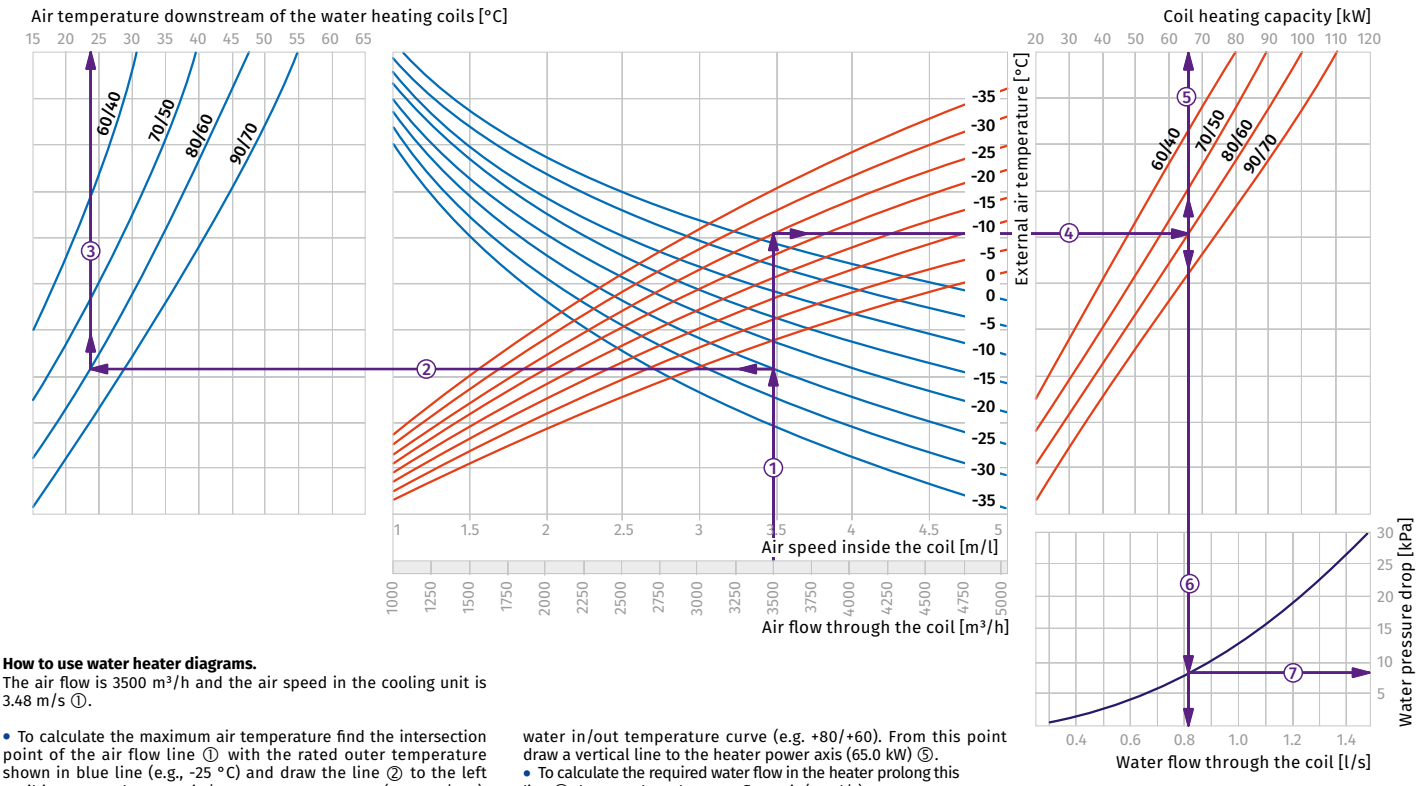

How to use water heater diagrams.
The air flow is 3500 m³/h and the air speed in the cooling unit is 3.48 m/s ①.

- To calculate the maximum air temperature find the intersection point of the air flow line ① with the rated outer temperature shown in blue line (e.g., -25 °C) and draw the line ② to the left until it crosses the water in/out temperature curve (e.g. +80/+60). From this point draw a vertical line to the supply air temperature downstream of the heater (+24 °C) ③.
- To calculate the heater power find the intersection point of the air flow ① with the rated winter temperature shown in red line (e.g., -25 °C) and draw the line ④ to the right until it crosses the water in/out temperature curve (e.g. +80/+60). From this point draw a vertical line to the heater power axis (65.0 kW) ⑤.
- To calculate the required water flow in the heater prolong this line ⑥ downwards to the water flow axis (0.81 l/s).
- To calculate the water pressure drop in the heater find the intersection point of the line ⑥ with the pressure loss curve and prolong the line ⑦ to the right on the water pressure drop axis (8.0 kPa).

Accessories

		BLAUBOX DW 1200-4 Pro	BLAUBOX DW 2300-4 Pro	BLAUBOX DW 3200-4 Pro	BLAUBOX DW 4100-3 Pro
G4 pocket filter		FPT 538x342x27 G4	FPT 538x342x27 G4	FPT 637x395x27 G4	FPT 737x441x27 G4
Silencer		SD 40x20	SD 50x30	SD 60x35	SD 80x50
Duct cooling unit		KFK 40x20-3	KFK 50x30-3	KFK 60x35-3	KFK 70x40-3
Duct cooling unit		KWK 40x20-3	KWK 50x30-3	KWK 60x35-3	KWK 70x40-3
Water mixing unit		WMG	WMG	WMG	WMG
Air flow dampers		SL 40x20	SL 50x30	SL 60x35	SL 70x40
Flexible anti-vibration connector		EVA 40x20	EVA 50x30	EVA 60x35	EVA 70x40
Air damper electric actuator		LF230	LF230	LF230	LF230
Air damper electric actuator		TF230	TF230	TF230	TF230