VENTO EXPERT A30 W V.2

Single-room heat recovery unit with Wi-Fi control

Air capacity up to 30 m³/h
Heat recovery efficiency up to 81 %

READY CONTROL
Wi Fi

BLAUBERG Ventilatoren

VENTO Expert A30 W V.2

SINGLE-ROOM HEAT RECOVERY UNIT WITH WI-FI CONTROL

Features

- Arrangement of efficient energy-saving supply and exhaust single-room ventilation in flats, houses, cottages, social and commercial premises.
- Reducing heat losses caused by ventilation due to heat recovery.
- Humidity balance and regulated air exchange create individually controlled microclimate.
- Wi-Fi communication between several single-room ventilation units for coordinated operation.
- Controlled by Android or iOS smartphone or tablet.

Air flow:
up to 30 m³/h
8 l/s

Heat recovery efficiency:
up to 81 %

Power:
from 1.8 W

Noise level:
from 21 dBA

EC motor · ErP 2016 · ErP 2018 · READY CONTROL Wi Fi

Design

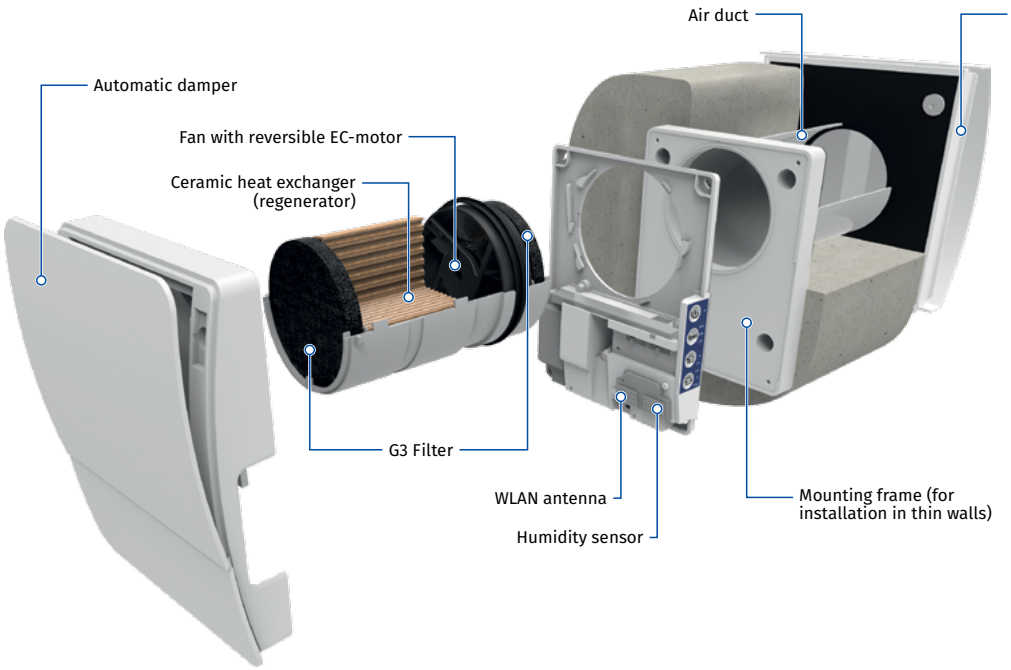

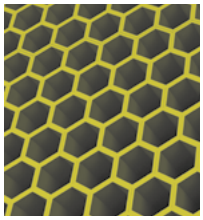

One of the best regeneration efficiency on the market due to innovative hexagonal structure of the heat exchanger cells.

READY CONTROL Wi Fi

The integrated Wi-Fi technology ensures control and setup of the unit via the mobile device based on Android or iOS platforms as well as wireless data transfer between the units

Designation key

Model	Air duct		Maximum air flow [m³/h]	Control
VENTO Expert	**A:** round air duct	–	30	**W V.2:** Control and setup of the unit with the Wi-Fi mobile application

VENTO Expert A30 W V.2

SINGLE-ROOM HEAT RECOVERY UNIT
WITH WI-FI CONTROL

Heat and moisture regeneration

UNIT OPERATING LOGIC IN WINTER PERIOD

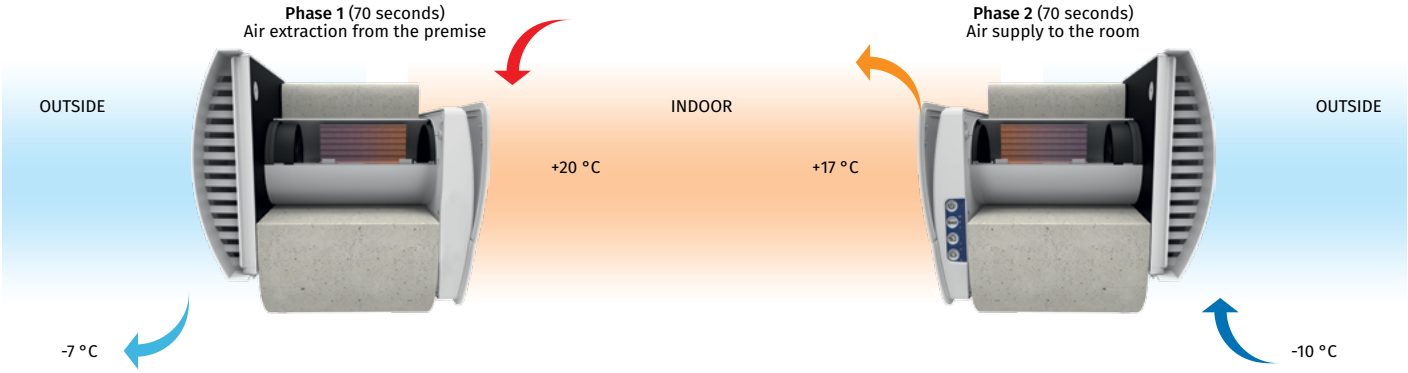

- Warm stale air is extracted from the premise, flows through the ceramic regenerator and transfers its heat energy and moisture to it.
- As the ceramic regenerator gets warmed up, the unit switches to the supply mode.
- Clean cold intake air flows through the regenerator and absorbs accumulated heat and humidity.
- When the ceramic regenerator is cooled down, the unit switches to the extract air mode.

Control

- Control of the unit operation mode is performed by means of smartphone or tablet. Wi-Fi communication between several units for coordinated operation is available.

Blauberg Vento V.2 app for Android or iOS devices is available at Google Play and App Store.

ANDROID APP ON Google play

Available on the App Store

VENTO Expert A30 W V.2

SINGLE-ROOM HEAT RECOVERY UNIT WITH WI-FI CONTROL

Mounting

- The unit is designed for through-the-wall installation inside a prepared hole in an outer wall of the building.
- The best ventilation solution is pairwise installation of reverse phase synchronized units. Some units ensure supply of fresh air to the room and the other units extract air from the premise. This way the most efficient balanced ventilation is arranged.
- In case of brand new construction, units are mounted in two stages:
  - Pre-installation of an air duct and an outer ventilation hood at the stage of indoor finishing and outer decorative wall finishing.
  - Completion of the installation before commissioning of a house. It includes installation of the indoor unit with controller and air damper, the cartridge, the regenerator, the fan and the filters.

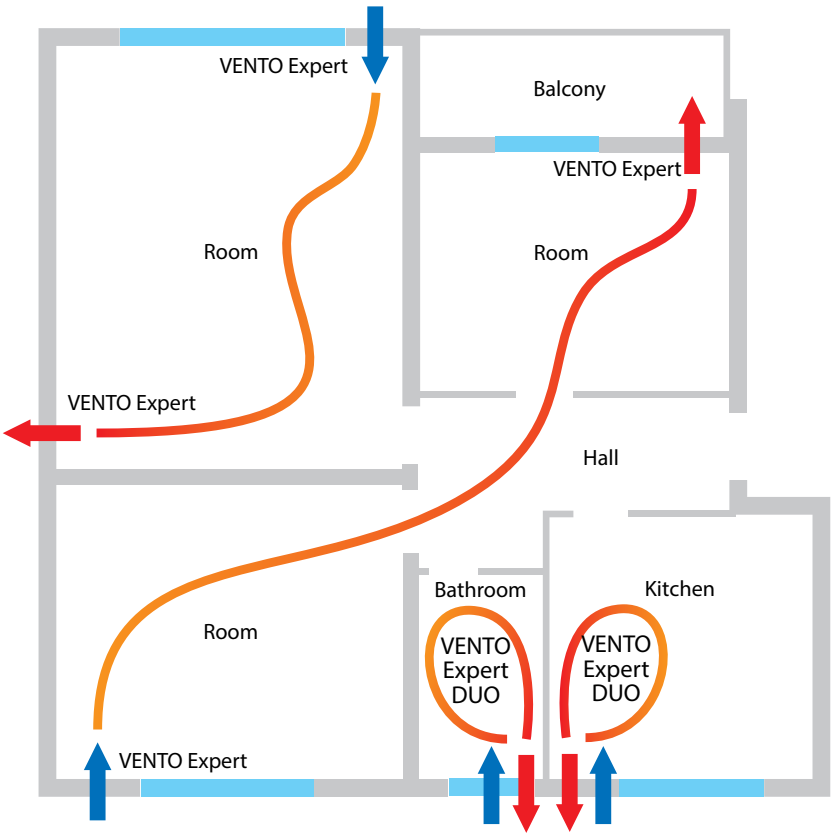

With mounting frame for thin walls

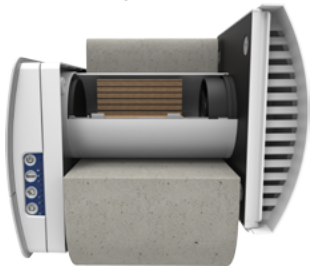

Angular mounting into a wall with standard thickness using **KIT BlauPlast white 100 / KIT BlauPlast chrome 100**

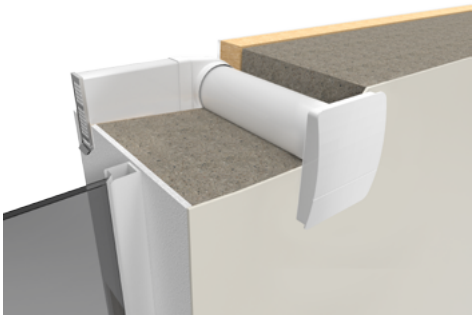

Overall dimensions [mm]

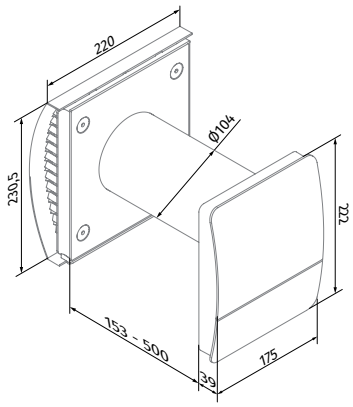

Vento Expert A30 W V.2

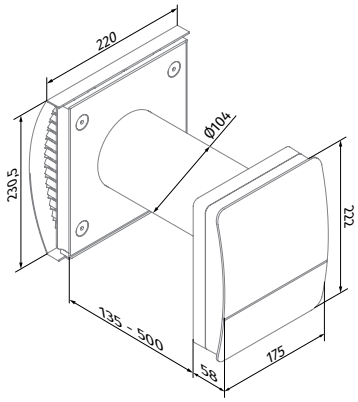

Vento Expert A30 W V.2
(with a mounting frame for thin walls)

VENTO Expert A30 W V.2

SINGLE-ROOM HEAT RECOVERY UNIT
WITH WI-FI CONTROL

Technical data

Parameters	Vento Expert A30 W V.2		
Speed	I	II	III
Voltage [V/50 (60) Hz]		100–240	
Power [W]	1.80	3.00	4.40
Current [A]	0.027	0.037	0.051
RPM [min⁻¹]	1600	2200	2500
Air flow in ventilation mode [m³/h (l/s)]	10 (3)	20 (6)	30 (8)
Air flow in heat recovery mode [m³/h (l/s)]	5 (1)	10 (3)	15 (4)
SFP [W/l/s]	1.30	1.08	1.06
Filter		G3	
Transported air temperature [°C]		-15 ... +50	
Sound pressure level at 1 m [dBA]	30	37	40
Sound pressure level at 3 m [dBA]	21	28	31
Outdoor sound pressure attenuation [dBA] in accordance with DIN EN 20140		42	
Regeneration efficiency [%] in accordance with DIBt LÜ-A 20		≤ 81	
SEC class		A	
Ingress protection rating		IP24	

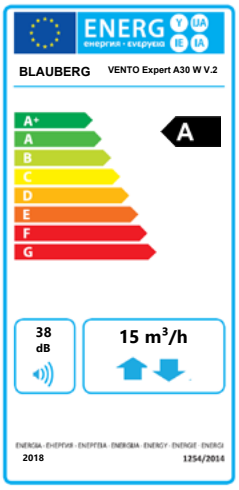

Accessories

Name		Description
Pre-installation Kit VENTO Expert A30 S10		Pre-installation kit for mounting into a wall with standard thickness. Includes: • Air duct • AH-10 white 100 outer ventilation hood • Plastic foam plug • Plastic foam wedges
Completion Kit VENTO Expert A30 W V.2	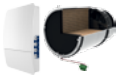	Final mounting kit. Includes: • Cartridge with a heat regenerator, a fan and G3 filters • Indoor unit with a controller and air damper
FP3 Vento G3		G3 filters (2 pcs.)
SE1 Vento Wi-Fi		Sensor control panel
KIT BlauPlast white 100	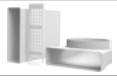	Kit for angular mounting with white color grille (for walls with standard thickness)
KIT BlauPlast chrome 100		Kit for angular mounting with stainless steel outer grille (for walls with standard thickness)
BlauPlast RTR 100/0.35-0.5		Telescopic air duct with the diameter of 100 mm and adjustable length from 350 to 500 mm
BlauPlast RTR 100/0.5-1		Telescopic air duct with the diameter of 100 mm and adjustable length from 500 to 1000 mm
S Vento Expert A30		Cardboard template for indoor installation of the unit