KOMFORT Roto EC S6(E)K 200

Air handling units with rotary heat exchanger

Features

- Air handling units for efficient supply and exhaust ventilation in flats, houses, cottages and other buildings.
- Heat recovery is provided by the rotary heat exchanger and minimizes ventilation heat losses.
- Controllable air exchange for creating the best suitable indoor microclimate.
- Compatible with round Ø 125 mm air ducts.
- Additional spigot for kitchen hood air duct connection.

Air flow:
up to 270 m³/h
75 l/s

Heat recovery efficiency:
up to 92 %

EC motor · ErP 2016 · ErP 2018 · Wi Fi READY · BMS

Design

- The fan casing is made of polymer coated steel and is heat- and sound-insulated with mineral wool.
- The spigots are located at the top of the unit and are rubber sealed for airtight connection to the air ducts.
- The insulation is 20 mm thick.
- **KOMFORT Roto EC S6K:** model without an electric heater.
- **KOMFORT Roto EC S6EK:** model with an electric heater.

Fans

- High-efficient external rotor EC motors and centrifugal impellers are used for air supply and exhaust.
- EC motors have the best power consumption to air flow ratio and meet the latest demands concerning energy saving and high-efficient ventilation.
- EC motors are featured with high performance, low noise level and totally controllable speed range.
- Dynamically balanced impellers.

Kitchen hood

- All units are equipped with a built-in kitchen hood.

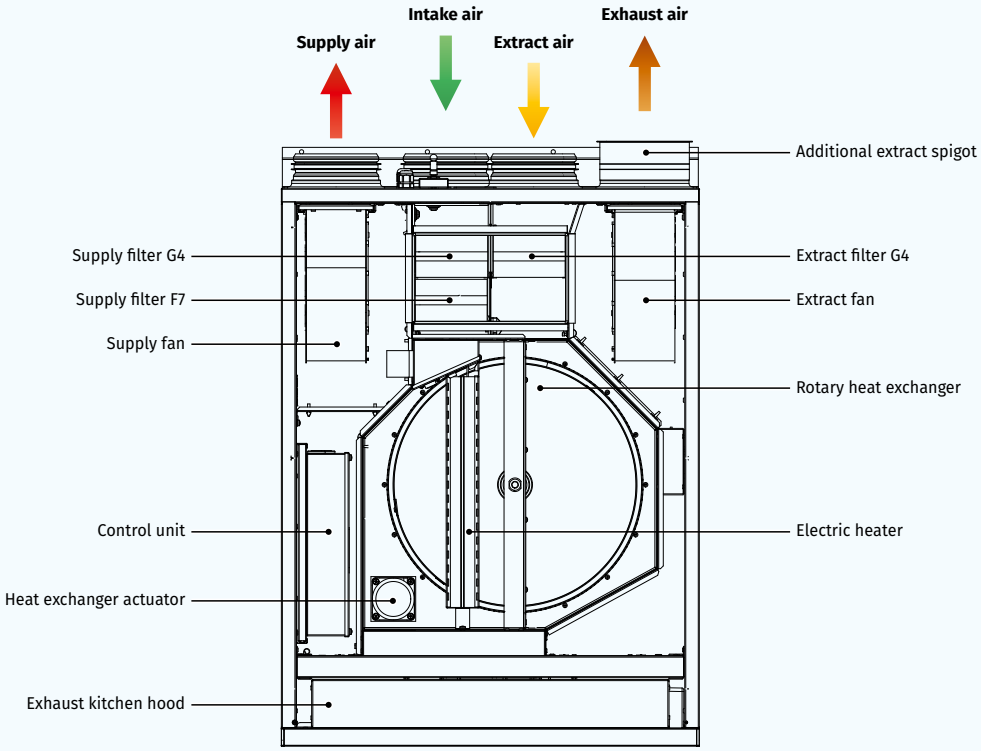

Air filtration

- Two built-in G4 and F7 filters provide efficient supply air filtration.
- The G4 filter is used for extract air filtration.

Heat recovery

- The unit has a high-efficient rotary aluminium heat exchanger (regenerator).
- The rotary heat exchanger is a short, rotating cylinder, filled with corrugated aluminium sheet layers. The air streams flow through them.
- The band layers of the heat exchanger first come in contact with the supply and then with extract air flows.
- Therefore the band is alternatively warmed up and cooled down and the extract air heat and humidity are transferred to the cold intake air. This way heat recovery reduces heat losses in the cold season and reduces operation load for air conditioner in the warm season.
- The advantages of the rotary heat exchanger as compared to plate heat exchangers include no condensate generation, maintaining comfort air humidity and high freeze resistance.

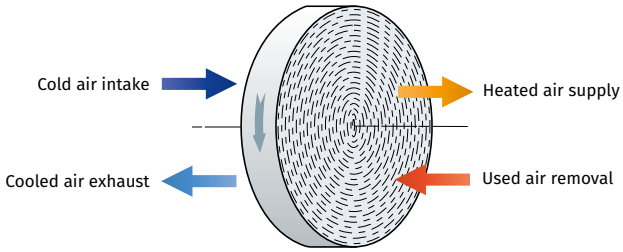

Rotary heat exchanger operating logic

Heater

- The **KOMFORT Roto EC S6EK** units are equipped with an electric heater. If the necessary temperature level of the supply air cannot be achieved through heat recovery, the heater turns on automatically and heats the air supplied to the premise. The heaters incorporate protective measures securing the safe unit operation.

Mounting

- The unit can be fixed to the wall and embedded into the kitchen set.
- It is possible to attach decorative kitchen panels to the front panel of the unit.
- During mounting stage the front and the back panels can be reversed providing either left-handed or right-handed unit mounting.

Control and automation

- The units are equipped with an integrated automation system. The remote control panel is not included in the delivery set (purchased separately).
- The S21 controller allows integrating the unit into the **Smart Home** system or **BMS** (**Building Management System**).
- The unit can be controlled via the **Blauberg AHU** mobile application via Wi-Fi.

Download the **Blauberg AHU** app for Android

Download the **Blauberg AHU** app for iOS

Automation functions

Functions	Description
Control via Wi-Fi using a mobile application	+
Control via a wired remote control panel	S22 control panel (option)
Control via a wireless remote control panel	S22 Wi-Fi control panel (option)
Control via a wired remote LCD control panel	S25 control panel (option)
BMS (Building Management System)	RS-485
	Wi-Fi
	Ethernet
	MODBUS (RTU, TCP)
Blauberg Cloud Server service	+
Speed selection	+
Filter replacement indication	by filter timer
Alarm indication	full alarm description in the mobile application
Week-scheduled operation	+
Timers	+
Boost mode	+
Fireplace mode	+
Cooler connection	option
Minimum supply air temperature control	+
Humidity control	option
CO_2 control	option
VOC control	option
PM2.5 control	option
Fire alarm sensor connection	option

option: function is available when purchasing the appropriate accessory (see the "Accessories" section).

Designation key

Series	Unit type	Motor type	Spigot modification	Casing type	Additional components	Rated air flow [m³/h]	Control
KOMFORT	**Roto:** rotary regenerator	**EC:** electronically commutated motor	**S:** vertical spigot orientation	**6:** casing for a thin kitchen hood	**_:** no heater **E:** electric heater **K:** kitchen hood	**200**	**S21**

Overall dimensions [mm]

Model	∅ D	B	B1	H	H1	L
KOMFORT Roto EC S6(E)K 200 S21	125	348	371	791	865	598

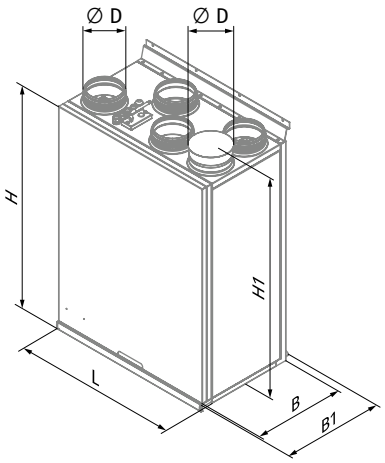

Technical data

Parameters	KOMFORT Roto EC S6K 200 S21	KOMFORT Roto EC S6EK 200 S21
Voltage [V / 50 (60) Hz]	1~230	1~230
Max. unit power without electric heater [W]	118	118
Max. power of electric heater [W]	-	700
Max. unit power [W]	118	818
Max. unit current without electric heater [A]	1.0	1.0
Max. unit current of electric heater [A]	-	3.0
Max. unit current [A]	1.0	4.0
Maximum air flow [m³/h (l/s)]	270 (75)	270 (75)
RPM [min⁻¹]	1800	1800
Sound pressure level at 3 m distance [dBA]	28	28
Operating temperature [°C]	-25...+40	-25...+40
Casing material	polymer coated steel	polymer coated steel
Insulation	20 mm mineral wool	20 mm mineral wool
Extract filter	G4	G4
Supply filter	G4+F7	G4+F7
Connected air duct diameter [mm]	125	125
Weight [kg]	47	48
Heat recovery efficiency [%] *	75–92	75–92
Heat exchanger type	rotary	rotary
Heat exchanger material	aluminum	aluminum
SEC class	A	A
ErP	2016, 2018	2016, 2018

* Heat recovery efficiency is specified in compliance with EN 13141-7.

KOMFORT ROTO EC S6(E)K 200

Sound power level, A-weighted	Total	Octave frequency band [Hz]								LpA 3 m	LpA 1 m
		63	125	250	500	1000	2000	4000	8000		
LWA to supply inlet [dBA]	**54**	48	42	51	44	41	40	39	31		
LWA to supply outlet [dBA]	**69**	34	45	54	61	64	64	59	54		
LWA to exhaust inlet [dBA]	**54**	48	41	52	43	33	32	34	30		
LWA to exhaust outlet [dBA]	**61**	32	40	51	57	53	55	53	47		
LWA to environment [dBA]	**49**	25	41	43	43	39	38	35	24	**28**	**38**

Data provided for point 1 of the air flow diagram

Total power. Total sound pressure level.

Point	Total power of the unit [W]	Sound pressure level at 3 m (1 m) [dBA]
1	103	28 (38)
2	98	28 (38)
3	85	29 (39)
4	43	21 (31)
5	40	21 (31)
6	37	20 (30)
7	18	19 (29)
8	17	19 (29)
9	16	17 (27)

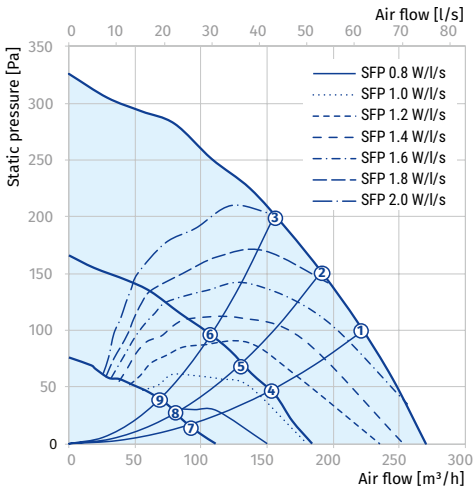

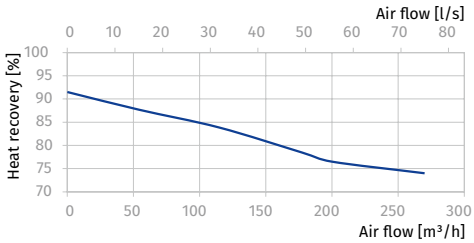

Calculation of air temperature downstream of the heat exchanger:

$t = t_{outd} + k_{hr} \times (t_{extr} - t_{outd}) / 100,$

where

t_{outd} – outdoor air temperature [°C]
t_{extr} – extract air temperature [°C]
k_{hr} – heat exchanger efficiency (according to the diagram) [%]

Accessories

		KOMFORT Roto EC S6(E)K 200 S21
G4 panel filter		FP 284x103x60 G4
F7 panel filter		FP 284x103x60 F7
Control panel		S22
Wi-Fi control panel		S22 Wi-Fi
LCD control panel		S25
Internal humidity sensor		FS2
Humidity sensor		HR-S
Humidity sensor		DPWC11200
CO_2 sensor with indication		CD-1
CO_2 sensor		CD-2
External CO_2 sensor		DPWQ40200
VOC sensor		DPWQ30600
Silencer		SD 125
Silencer		SDF 125
Backdraft air damper		VRV 125
Air damper		VKA 125
Electric actuator		LF230
Electric actuator		TF230