Room thermostat
TS E10

Use
- For comfortable indoor temperature conditions and control of ventilation, heating and air conditioning systems.

Design
- Casing made of high-quality plastic.
- Temperature regulator on front panel and switch for operation mode selection on side panel.
- Supplied in casing for wall mounting.
- IP40 ingress protection rating.

Control
- Temperature regulation range from +10 up to +30 °C.
- The regulator has two operating patterns:

-the contacts close when a temperature set point is reached and the fan turns on;
-the contacts open when a temperature set point is reached and the fan turns off.

Mounting
- Indoor wall surface installation in mounting box.
- Recommended installation height is 1,5 m above the floor level.
- Do not install the regulator close to windows, heating or cooling equipment.

Specifications

Parameters	TS E10
Voltage [V]	1 ~ 220-240
Rated current per Fig. 1 [A]	10
Rated current per Fig. 2 [A]	6
Overall dimensions AxBxC [mm]	84x84x35
Max. ambient temperature, °C	40
Ingress Protection	IP40

Regulator connection options

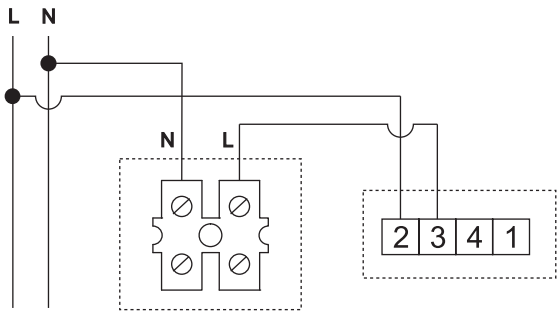

Fig.1. The fan operates until the temperature threshold set by the thermostat is reached.

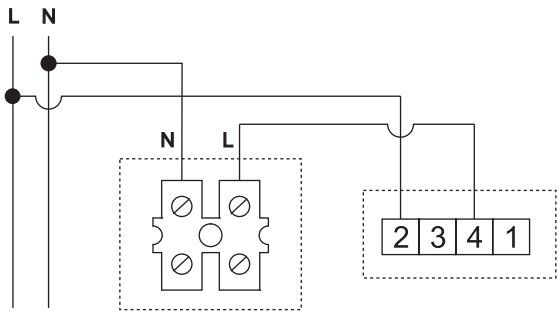

Fig.2. The fan turns on when the temperature threshold set by the thermostat is reached.